HOBART

CATALOG OF REPLACEMENT PARTS

MODEL HCB SERIES ELECTRIC BROILERS

HCB42	ML-43816
HCB43	ML-43817
HCB440	ML-43818
HCB45	ML-43819
HCB46	ML-43820
HCB47	ML-43821

A product of HOBART CORPORATION 701 RIDGE AVENUE TROY, OHIO 45374-0001

FORM 18532 (12-92)

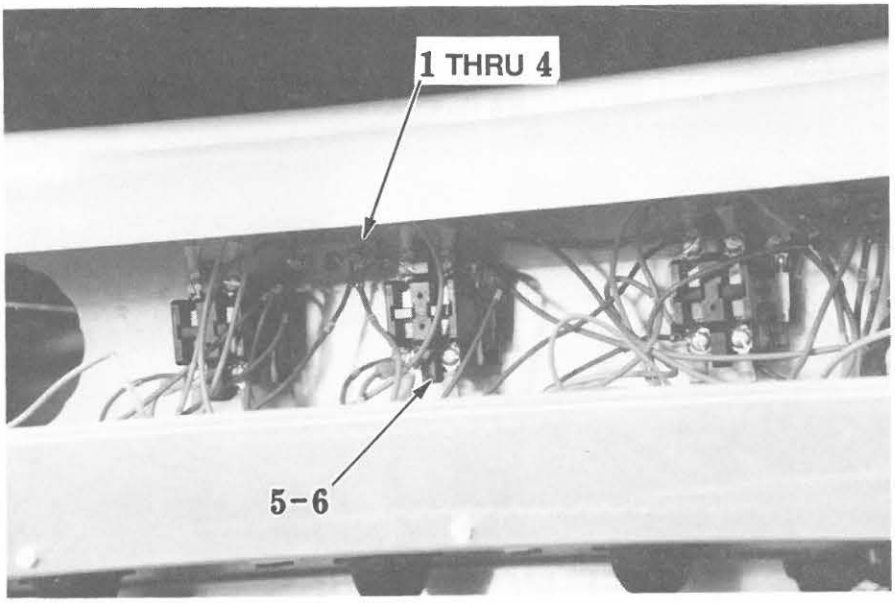

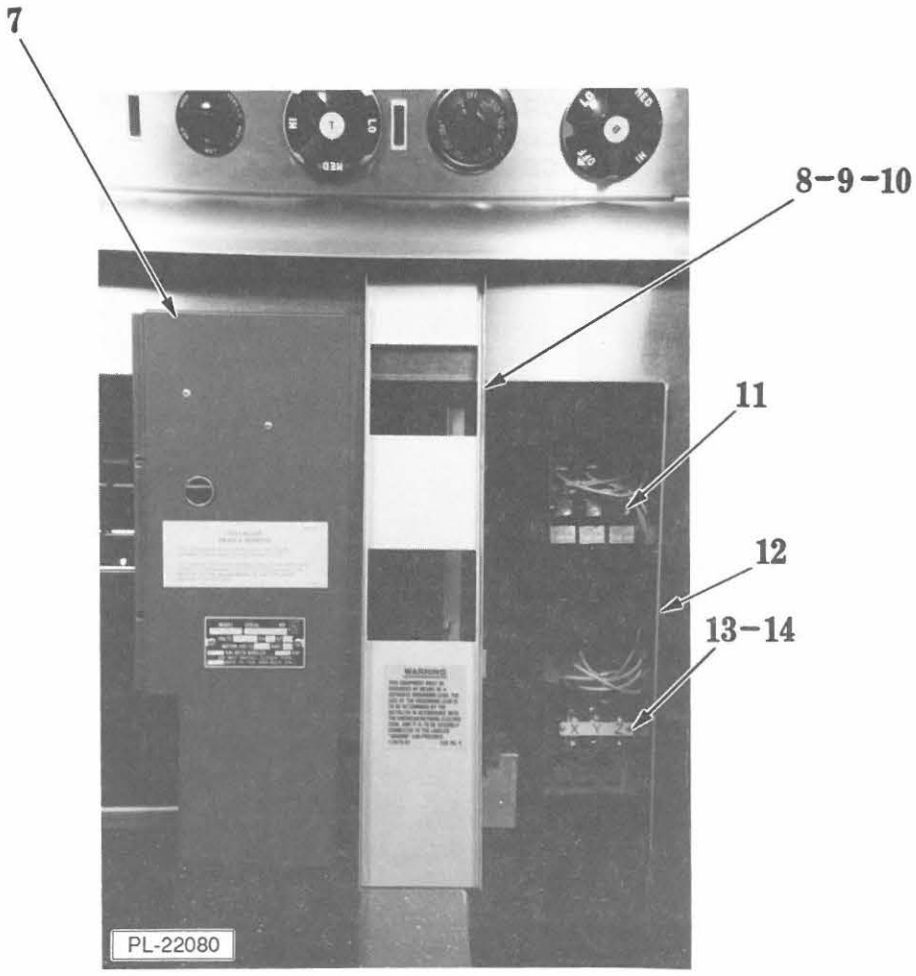

ELECTRICAL COMPONENTS

© HOBART CORPORATION, 1992

ELECTRICAL COMPONENTS

ILLUS. PL-22080	PART NO.	NAME OF PART	AMT.
1	417934-G1	Block Assy. - Porcelain (208-240 V. Machines) (Incls. item 2, 3 & 4)	AR
2	SC-117-3	Mach. Screw 10-24 x 1¼ Rd. Hd.	AR
3	WS-23-20	Washer	AR
4	NS-44-9	Nut Assy 10-24 Hex "KEPS"	AR
5	411497-B1	Contactor (208-240 V. Machines)	AR
6	417856-1	Ground Lug (208-240 V. HCB 42 & 440 Units Only)	1
7	406708-G1	Door - Access Breaker (HCB 42, 43, 440 & 45)	1
8	412578-1	Closure - Breaker (208-240 V.) (Shown)	1
9	411904-1	Cover - Breaker Closure (208-240 V. HCB 43 & 46 Machines)	1
10	412578-2	Closure - Breaker (480 V.)	1
11	411501-14	Circuit Breaker (50 Amp.) (208-240 V. Machines)	AR
12	412577-1	Box - Breaker	1
13	410472-11	Terminal Block (208-240 V. HCB 440 Machines)	1
14	410472-8	Terminal Block (480 V. HCB 440 Mach. & All Voltages of HCB 42, 43, 45, 46 & 47)	1
15	FE-23-56	Bushing - Electrical Snap	AR

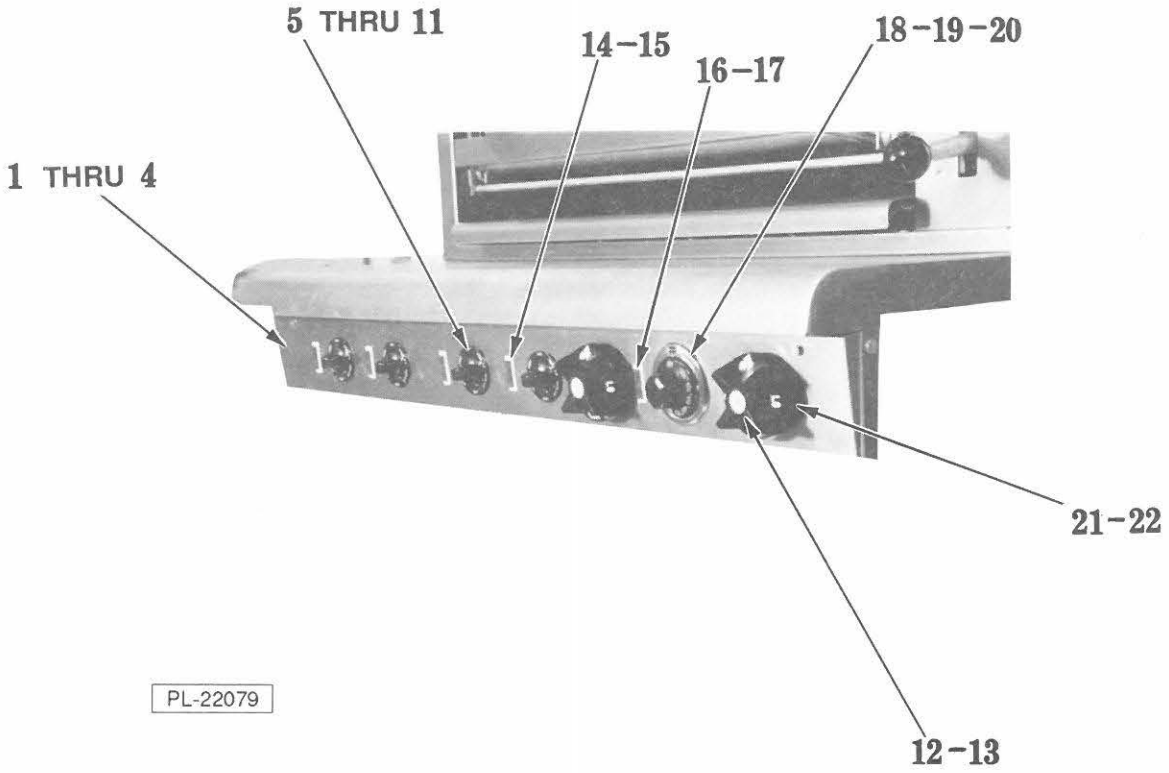

SWITCH PANEL CONTROL

ILLUS. PL-22079	PART NO.	NAME OF PART	AMT.
1	411764-G1	Panel - Switch (HCB 440)	1
2	411764-G2	Panel - Switch (HCB 42)	1
3	411764-G3	Panel - Switch (HCB 45 & 47)	1
4	411764-G4	Panel - Switch (HCB 43 & 46)	1
5	412251-2	Knob - Infinite Control (208-240 V. Machines) (Shown)	AR
6	407727-6	Knob - 3 Heat (480 V. Machines)	AR
7	411503-3	Switch (208 V. Machines)	AR
8	411503-2	Switch (240 V. Machines)	AR
9	355798-1	Switch - 3 Heat Select (480 V. Machines)	AR
10	419769-1	Tab - I.D. (R) (480 V. Machines)	AR
11	419769-3	Tab - I.D. (F) (480 V. Machines)	AR
12	419769-4	Tab - I.D. (Top)	1
13	419769-5	Tab - I.D. (Bottom)	1
14	411496-E4	Indicator Light - Red (Broiler)	AR
15	417876-1	Resistor - 300 K (Use on 480 V. Machines)	AR
16	411496-E5	Indicator Light (Oven) (HCB 42 & 440)	1
17	417876-1	Resistor - 300 K (Use on 480 V. Machines)	1
18	415119-7	Dial (200-500 Deg F.) (HCB 42 & 440)	1
19	415119-6	Bezel (HCB 42 & 440)	1
20	415119-2	Thermostat (200-550 Deg F.) (HCB 42 & 440)	1
21	407727-6	Knob - 3 Heat (Oven) (HCB 42 & 440)	2
22	355798-1	Switch - 3 Heat Select (Oven) (HCB 42 & 440)	2

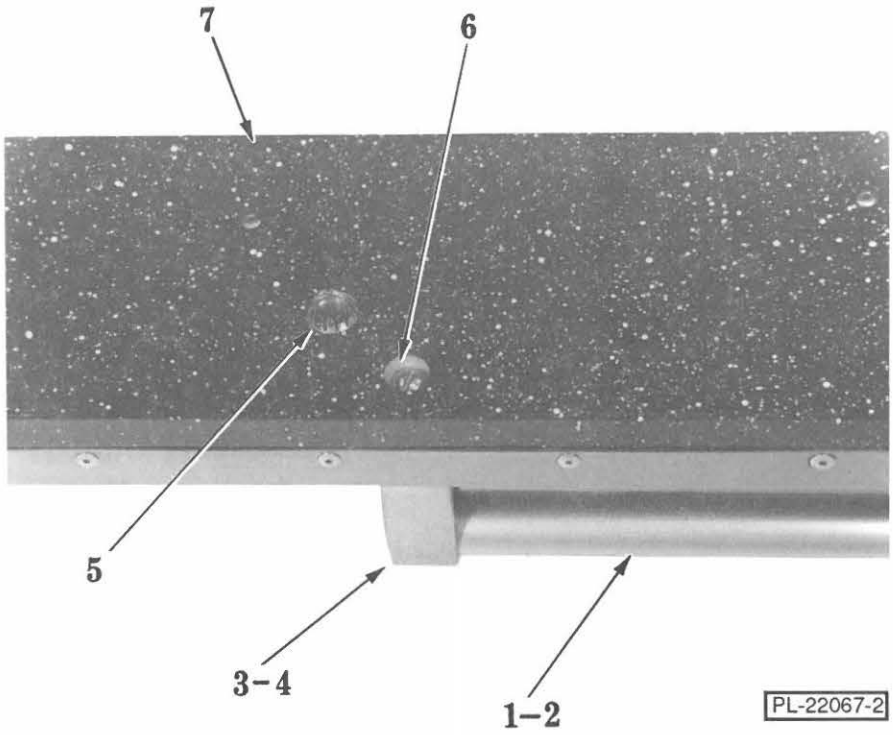

DOOR UNIT - OVEN
HCB42 & HCB440

ILLUS. PL-22067-2	PART NO.	NAME OF PART	AMT.
1	419765-1	Handle - Door	1
2	419766-G1	Insert - Door Handle	1
3	419764-1	End Cap L.H.	1
4	419764-2	End Cap R.H.	1
5	PB-4-73	Plug Button	2
6	SC-120-22	Mach. Screw ⅜-16 x 1¼ Rd. Hd.	2
7	357102-G1	Door Assy. Complete W/Hinges (Incls. items 1 thru 6)	1

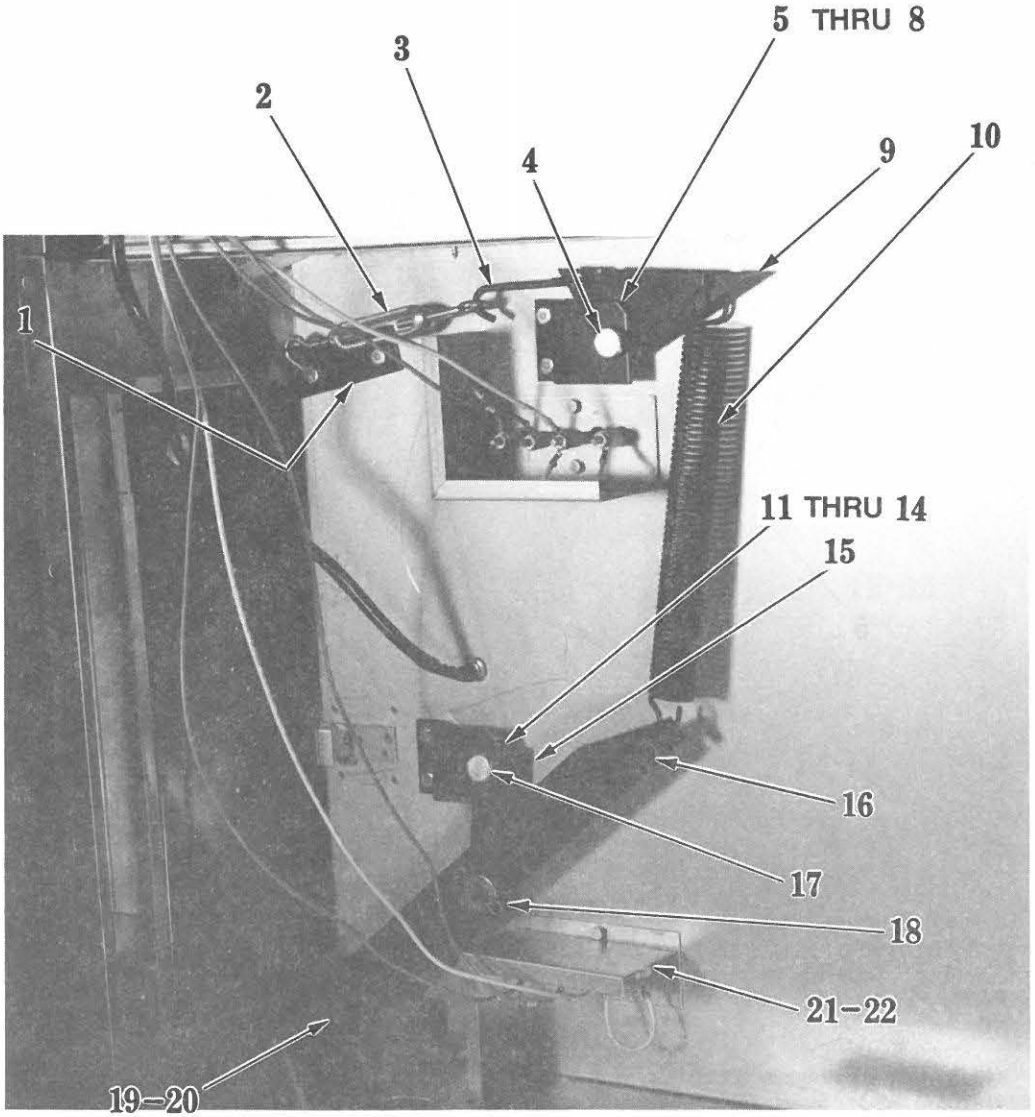

PL-22081-1

DOOR MECHANISM — OVEN
(HCB42 & 440)

DOOR MECHANISM - OVEN
(HCB42 & 440)

ILLUS. PL-22081-1	PART NO.	NAME OF PART	AMT.
1	410110-1	Anchor - Spring	1
2	417865-1	Turnbuckle	1
3	405618-1	Hook - Oven Door	1
4	SC-90-1	Bolt - Shoulder ½-13 x 2 Hex Hd.	1
5	408895-G1	Crank Support Assy.	1
6	409240-2	Spacer - 7/16 Lg.	1
7	404629-1	Bearing - Hinge Pin	1
8	408896-1	Support - Crank	1
9	410111-1	Bell - Crank	1
10	406363-1	Spring - Door	1
11	408895-G1	Crank Support Assy.	1
12	409240-1	Spacer - 5/16 Lg.	1
13	404629-1	Bearing - Hinge Pin	1
14	408896-1	Support - Crank	1
15	410090-G1	Radius Bar Assy.	1
16	410089-1	Arm - Door Control	1
17	SC-90-1	Bolt - Shoulder ½-13 x 2 Hex Hd.	1
18	PC-3-36	Cotter Pin 3/32 x 1 Lg.	1
19	417860-1	Bolt - Shoulder 3/8-16 x ¾ Hex Hd.	1
20	417862-1	Hinge Pin	1
21	410114-1	Cover - Terminals (Bottom Oven Heat Elements)	1
22	410113-1	Cover - Terminals (Top Oven Heat Elements)	1
	412887-G1	Door Frame Assy.	1

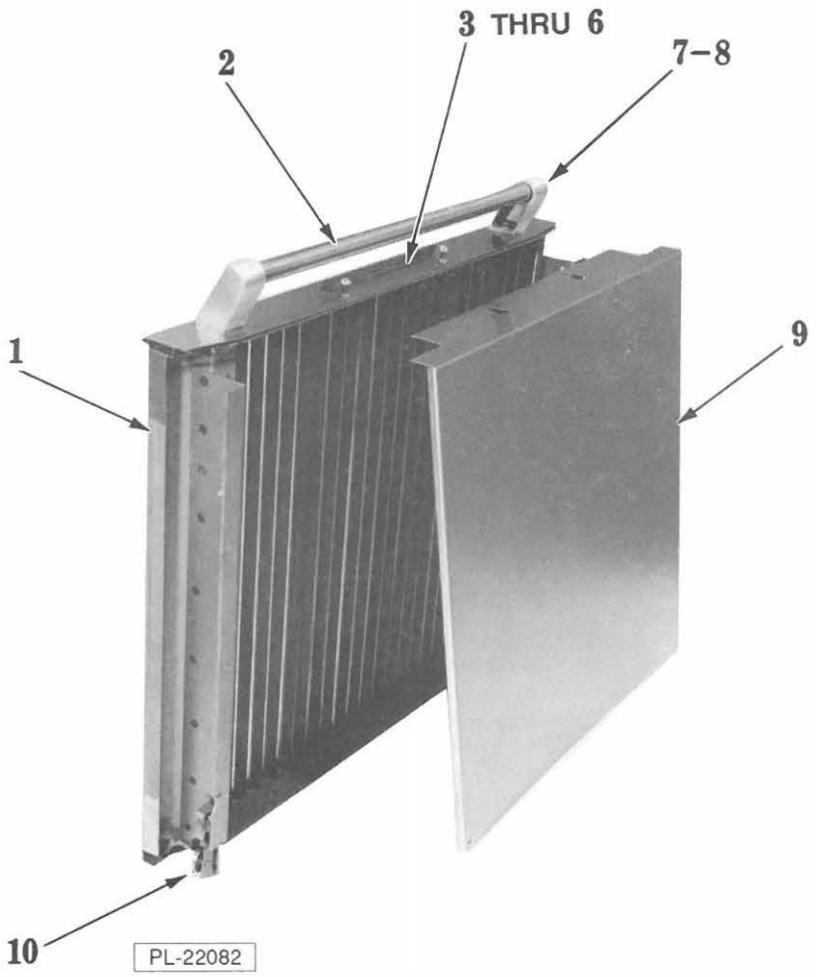

BROILER GRID & DRIP SHIELD

ILLUS. PL-22082	PART NO.	NAME OF PART	AMT.
1	406974-G1	Grid Assy.	1
2	404647-2	Handle	1
3	410443-1	Retainer - Drip Shield	1
4	402091-16	Mach. Screw 10-24 x 1 Truss Hd.	2
5	408765-4	Spacer	2
6	NS-47-70	Lock Nut 10-24 Light Flexloc	2
7	409790-3	Post - Handle (R.H.)	1
8	409790-4	Post - Handle (L.H.)	1
9	407643-1	Drip Shield	1
10	405655-1	Ball Bearing	4
	412999-G1	Grid Assy. Complete (Incls.items 1 thru 8 & 10)	1

* 1 Unit Required on HCB 42, 43 & 46 Models.
2 Units Required on HCB 440, 45 & 47 Models.

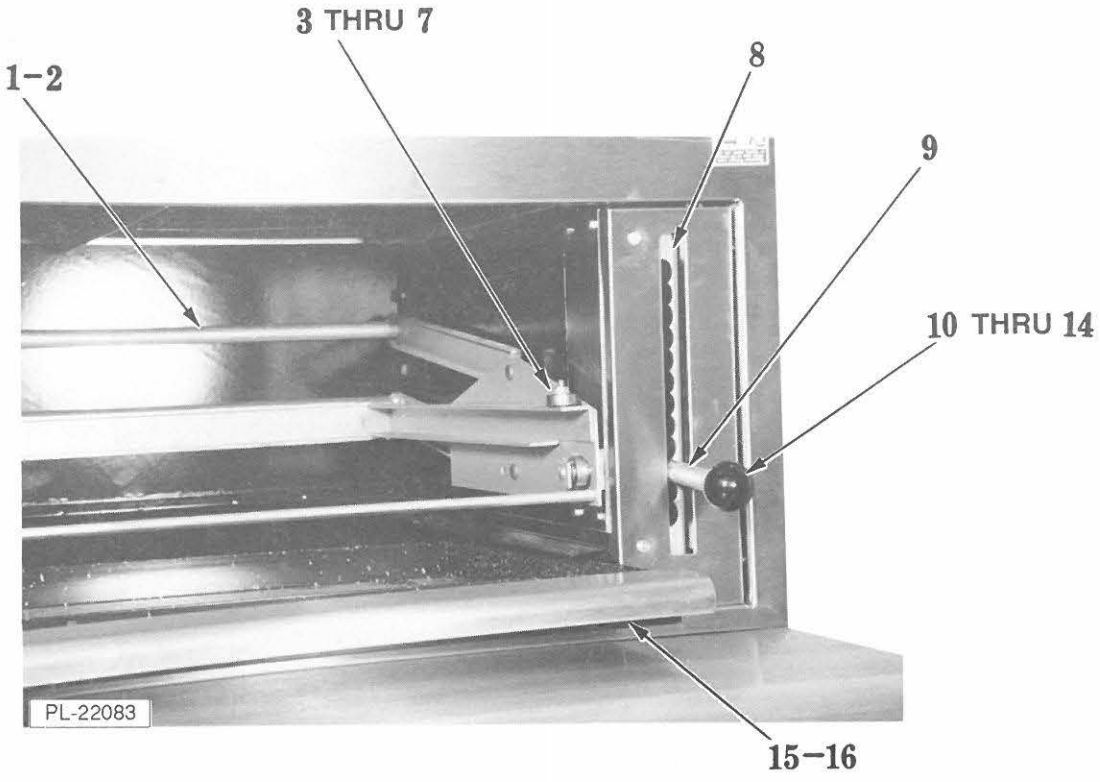

CARRIAGE & LIFT UNIT (BROILER)

ILLUS. PL-22083	PART NO.	NAME OF PART	AMT.
1	406966-G1	Carriage & Lift Mechanism (Shown)	1
2	417866	Spring - Carriage	1
3	405655-1	Ball Bearing	4
4	407488-1	Pin - Bearing	2
5	417869-1	Spacer	2
6	WS-3-3	Washer	4
7	PC-3-36	Cotter Pin 3/32 x 1 Lg.	2
8	407619-1	Ratchet Stop	1
9	406046-1	Sleeve - Handle	1
10	414819-3	Knob - Ball (Black)	1
11	406056-2	Adapter - Ball Handle	1
12	407636-G1	Push Rod Assy.	1
13	417810-2	Spring - Compression	1
14	NS-13-22	Full Nut 3/8-16 Hex	2
15	406990-G1	Grease Collector	1
16	407006-1	Handle - Grease Collector	1

* 1 Unit Required on HCB 42, 43 & 46 Models.
2 Units Required on HCB 440, 45 & 47 Models.

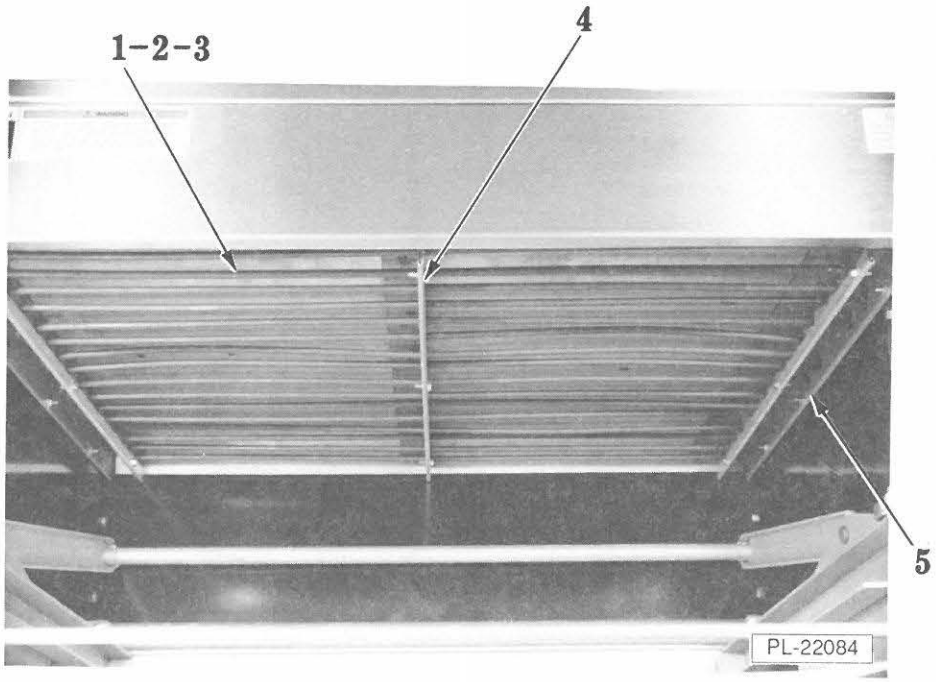

ELECTRIC HEAT ELEMENTS (BROILER)

ILLUS. PL-22084	PART NO.	NAME OF PART	AMT.
1	407012-4	Electric Heat Element 208 V.	4
2	407012-5	Electric Heat Element 240 V.	4
3	407012-6	Electric Heat Element 480 V.	4
4	410465-1	Retainer - Heating Element	3
5	407930-G1	Heat Shield Assy.	1

* 1 Unit Required on HCB 42, 43 & 46 Models.
2 Units Required on HCB 440, 45 & 47 Models.

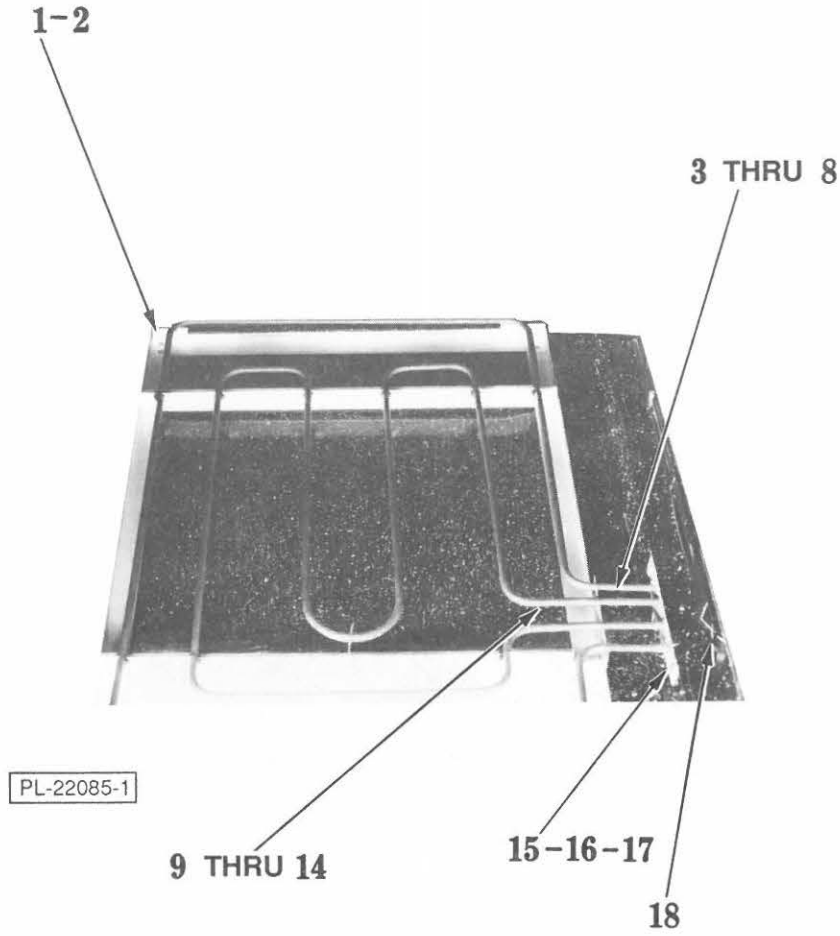

ELECTRIC HEAT ELEMENTS (OVEN)
(HCB 42 & 440)

ILLUS. PL-22085-1	PART NO.	NAME OF PART	AMT.
1	420371-G3	Frame - Top Elements	1
2	420371-G4	Frame - Bottom Elements	1
3	417823-1	Element - Outer Top 208 V.	1
4	417823-2	Element - Outer Top 240 V.	1
5	417823-3	Element - Outer Top 480 V.	1
6	417823-5	Element - Outer Bottom 208 V.	1
7	417823-6	Element - Outer Bottom 240 V.	1
8	417823-7	Element - Outer Bottom 480 V.	1
9	417820-1	Element - Inner Top 208 V.	1
10	417820-2	Element - Inner Top 240 V.	1
11	417820-3	Element - Inner Top 480 V.	1
12	417820-5	Element - Inner Bottom 208 V.	1
13	417820-6	Element - Inner Bottom 240 V.	1
14	417820-7	Element - Inner Bottom 480 V.	1
15	412708-1	Spacer - Division Side	3
16	412707-1	Spacer - Oven Side	3
17	412707-2	Spacer - Oven Side (480 V.)	2
18	417157-1	Protector - Thermostat Bulb	1
	420358-G1	Element Assy. - Top 208 V. (Incls.items 1, 3, 9, 15 & 16)	1
	420358-G2	Element Assy. - Top 240 V. (Incls.items 1, 4, 10, 15 & 16)	1
	420358-G3	Element Assy. - Top 480 V. (Incls.items 1, 5, 11, 15, 16 & 17)	1
	420358-G4	Element Assy. - Bottom 208 V. (Incls.items 2, 6, 12, 15 & 16)	1
	420358-G5	Element Assy. - Bottom 240 V. (Incls.items 2, 7, 13, 15 & 16)	1
	420358-G6	Element Assy. - Bottom 480 V. (Incls.items 2, 8 14 thru 17)	1

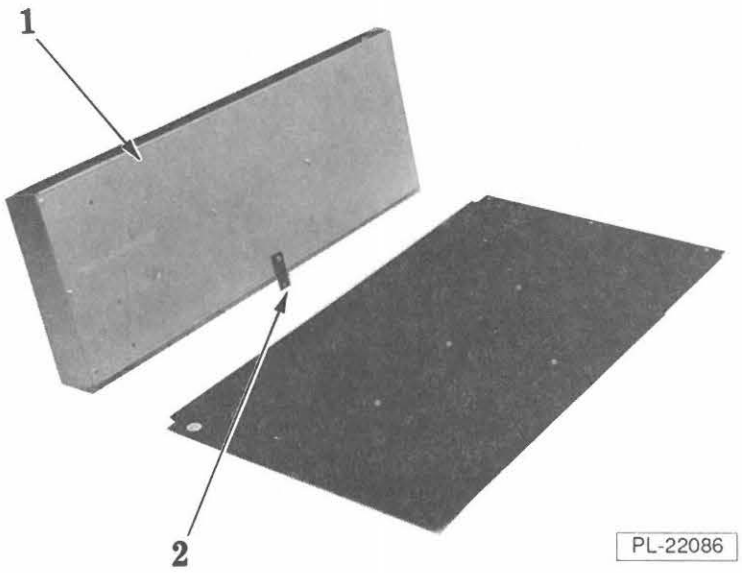

MISCELLANEOUS

ILLUS. PL-22086	PART NO.	NAME OF PART	AMT.
1	407213-1	Flue Riser	1
2	407449-1	Strap - Back Attaching	AR
	409840-6	Leg (HCB 42, 43, 440 & 45)	4
	410118-1	Caster (HCB 42, 43, 440 & 45)	2
	410118-2	Caster W/Brake (HCB 42, 43, 440 & 45)	2