HOBART

CATALOG OF REPLACEMENT PARTS



MODEL
HEC ELECTRIC
CONVEYOR OVEN

HEC3018	ML-136010
HEC3018	ML-136011
HEC4018	ML-136012

PRIOR MLS COVERED IN THIS CATALOG

HEC3018	ML-126188
HEC3018	ML-126400
HEC4018	ML-126189

A product of HOBART CORPORATION 701 S. RIDGE AVENUE TROY, OHIO 45374-0001

FORM 34615 Rev. A (May 2003)

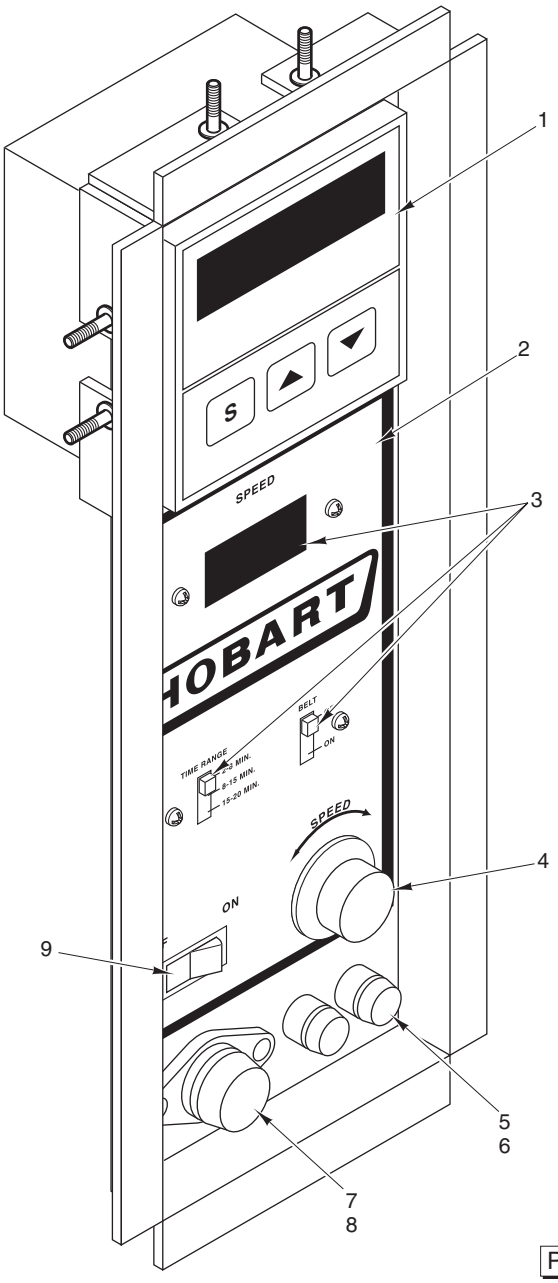

CONTROL PANEL
(ML-126188, ML-126189, AND ML-126400)

© HOBART CORPORATION

CONTROL PANEL
(ML-126188, ML-126189, AND ML-126400)

ILLUS. PL-56968	PART NO.	NAME OF PART	AMT.
1	00-425058-00001	Controller – Temperature	1
2	00-425061-00001	Decal – Hobart	1
3	00-425063-00001	Board – Speed Control (ML-126188, ML-126189, & ML-126400)	1
4	00-425062-00001	Knob – Speed Control	1
5	00-425535-00001	Holder – Fuse (Drive Motor)	2
6	FE-022-29	Fuse (250 V.) (1 Amp.)	2
7	00-425537-00001	Holder – Fuse (Control Circuit)	1
8	00-425538-00001	Fuse (25 Amp.) (Control Circuit)	1
9	00-425451-00001	Switch – ON/OFF	1
	00-425059-00001	Thermocouple	1
	00-425876-00001	Sleeve – Wrap (Polyethylene)	1
	00-402558-00004	Clip – Tubing	1
	SD-029-04	Self-Tapping Screw 8-32 x 3/8 Phil. Truss Hd., Type F	1

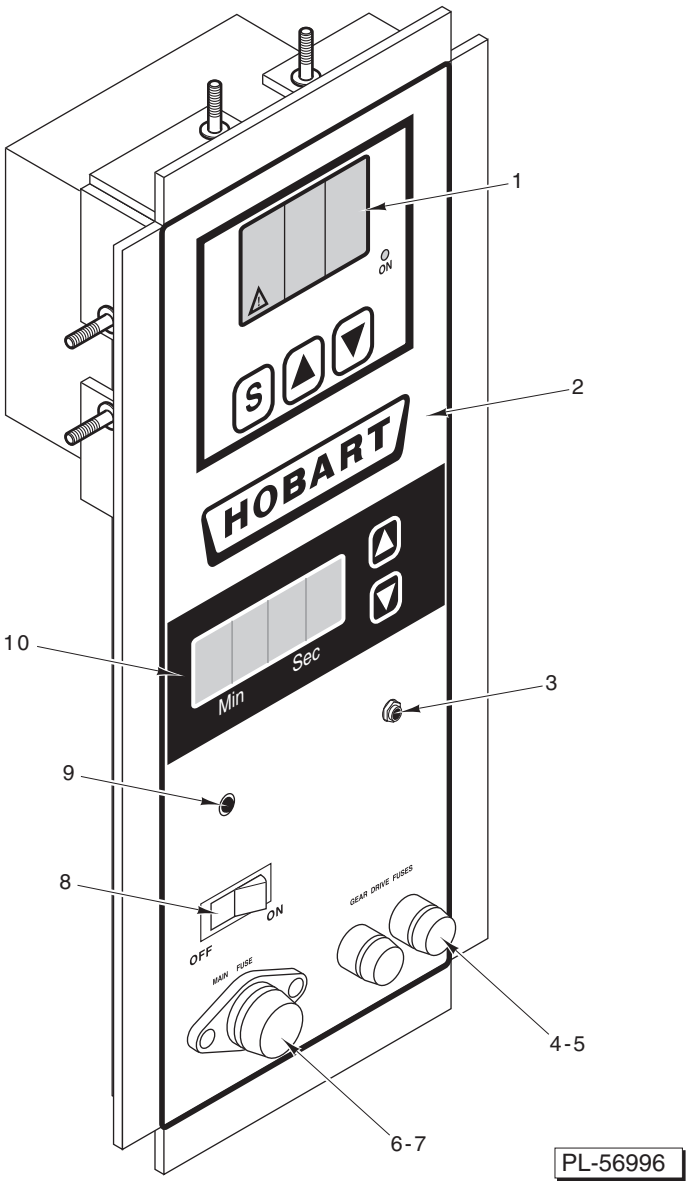

CONTROL PANEL
(ML-136010, ML-136011, AND ML-136012)

CONTROL PANEL
(ML-136010, ML-136011, AND ML-136012)

ILLUS. PL-56996	PART NO.	NAME OF PART	AMT.
1	00-425058-00001	Controller – Temperature	1
2	00-855341-00012	Overlay – Hobart	1
3	00-855341-00010	Reset Button – High Limit	1
4	00-425535-00001	Holder – Fuse (Drive Motor)	2
5	FE-022-29	Fuse (250 V.) (1 Amp.)	2
6	00-425537-00001	Holder – Fuse (Control Circuit)	1
7	00-425538-00001	Fuse (25 Amp.) (Control Circuit)	1
8	00-425451-00001	Switch – ON/OFF	1
9	00-855341-00011	Lamp – Neon, High Limit Indicator	1
10	00-427766-00001	Board – Speed Control	1
	00-425876-00001	Sleeve – Wrap (Polyethylene)	1
	00-402558-00004	Clip – Tubing	1
	SD-029-04	Self-Tapping Screw 8-32 x $^{3}/_{8}$ Phil. Truss Hd., Type F	1

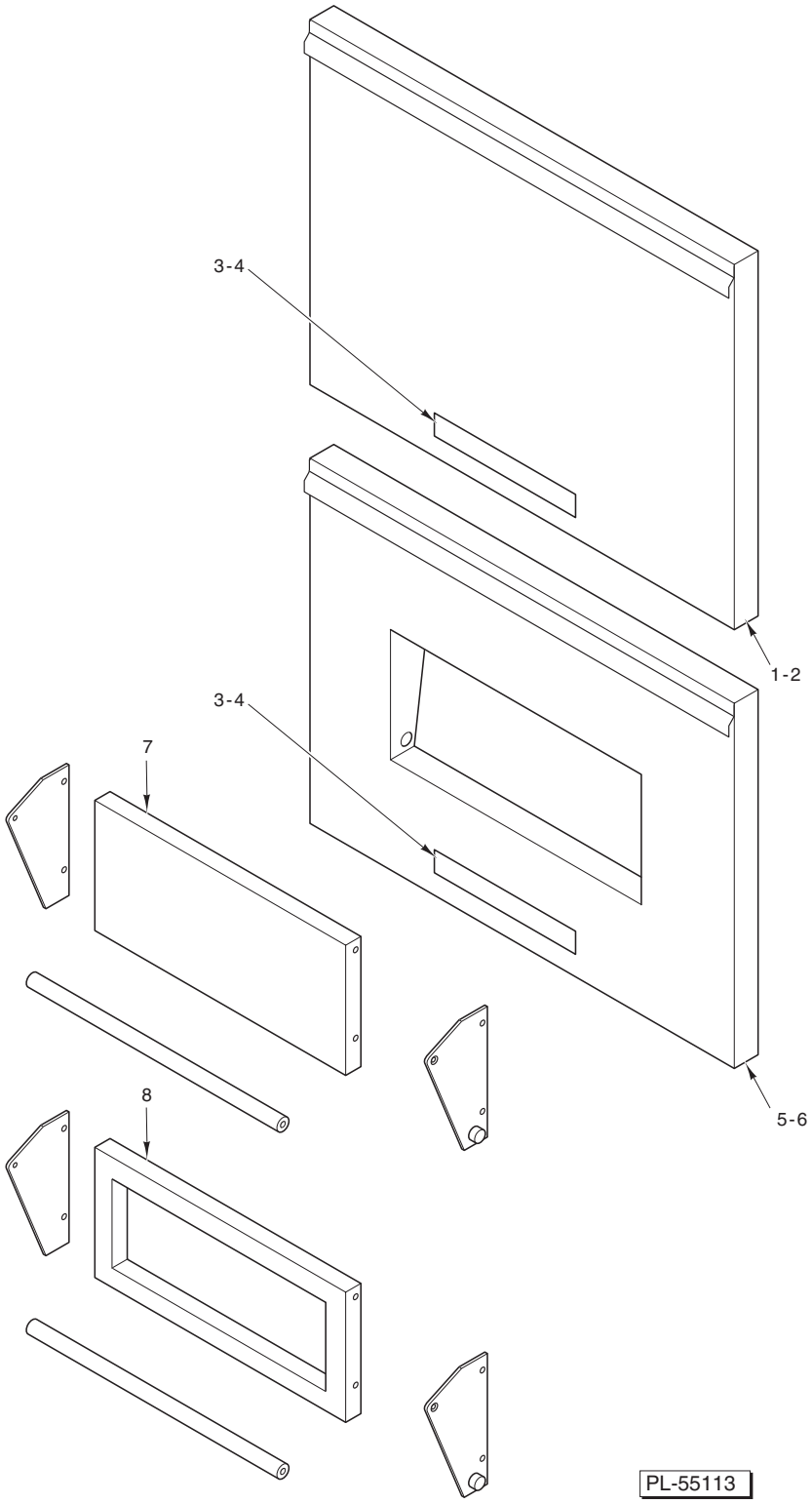

FRONT SANDWICH DOOR ASSEMBLY

FRONT SANDWICH DOOR ASSEMBLY

ILLUS. PL-55113	PART NO.	NAME OF PART	AMT.
1	00-426773-000G1	Panel – Front Access (ML-126188, ML-126400, ML-136010, & ML-136011)	1
2	00-426777-000G1	Panel – Front Access (ML-126189 & ML-136012)	1
3	00-418959-00001	Namplate – Hobart	1
4	00-425982-00001	Receptacle – Stud	2
5	00-426781-000G1	Panel – Front Access (ML-126188, ML-126400, ML-136010, & ML-136011)	1
6	00-426786-000G1	Panel – Front Access (ML-126189 & ML-136012)	1
7	00-427192-000G1	Door – Front Sandwich (SST)	1
8	00-427188-000G1	Door – Front Sandwich (Glass)	1

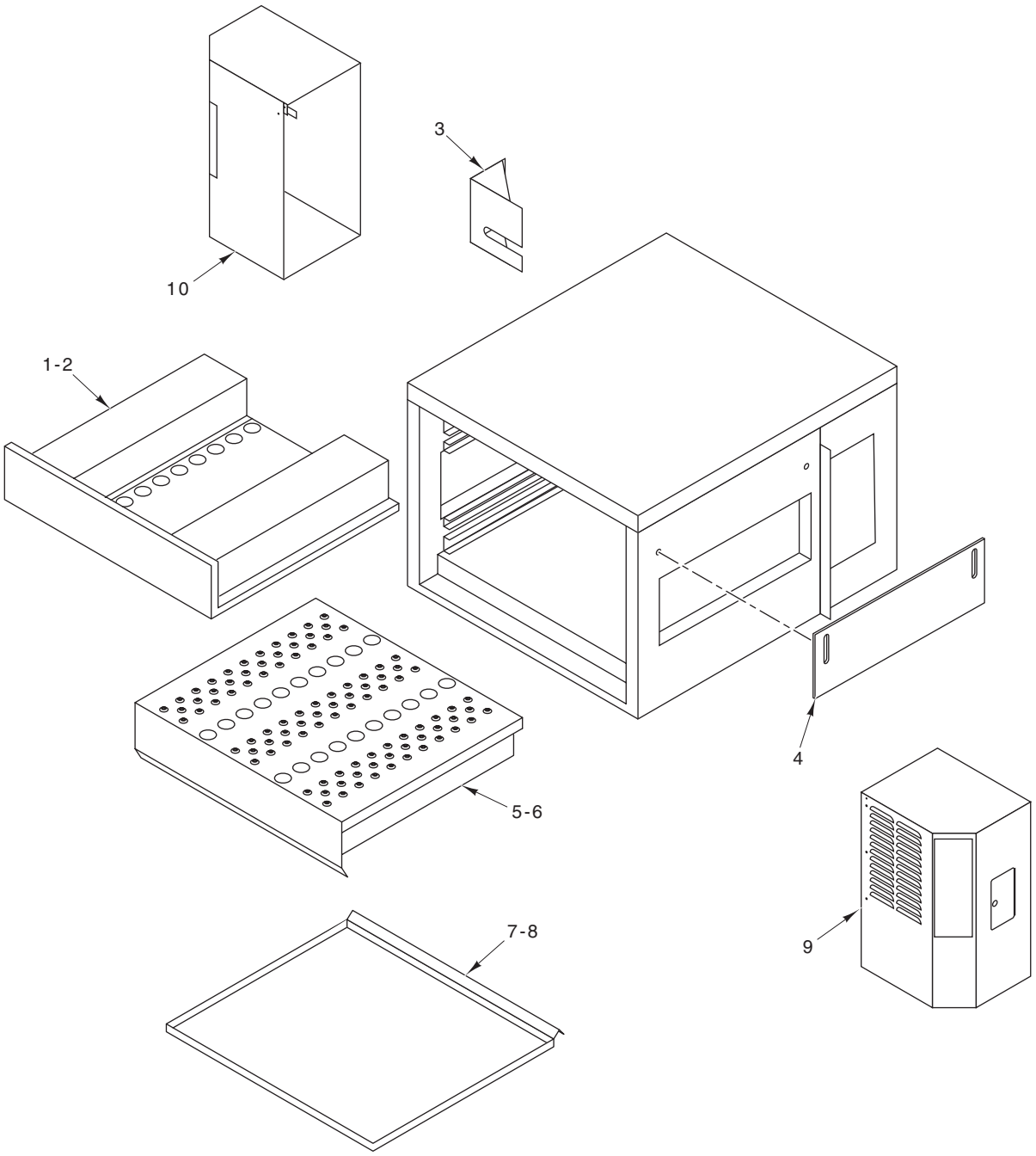

PL-56997

PANELS AND DUCTS

PANELS AND DUCTS

ILLUS. PL-56997	PART NO.	NAME OF PART	AMT.
1	00-425483-000G1	Panel – Air Distribution (Top) (ML-126188, ML-126400, ML-136010, & ML-136011)	1
2	00-425483-000G2	Panel – Air Distribution (Top) (ML-126189 & ML-136012)	1
3	00-427022-000G1	Chain Cover Assy.	1
4	00-427021-000G1	Tunnel Curtain (18 In.)	2
5	00-425485-000G1	Panel – Air Distribution (Bottom) (ML-126188, ML-126400, ML-136010, & ML-136011)	1
6	00-425485-000G2	Panel – Air Distribution (Bottom) (ML-126189 & ML-136012)	1
7	00-425481-00001	Tray – Crumb (ML-126188, ML-126400, ML-136010, & ML-136011)	1
8	00-425481-00002	Tray – Crumb (ML-126189 & 136012)	1
9	00-425988-000G1	Control Cover Assy. (Right Side)	1
10	00-425724-000G1	Conveyor Drive Motor Cover Assy. (Left Side)	1

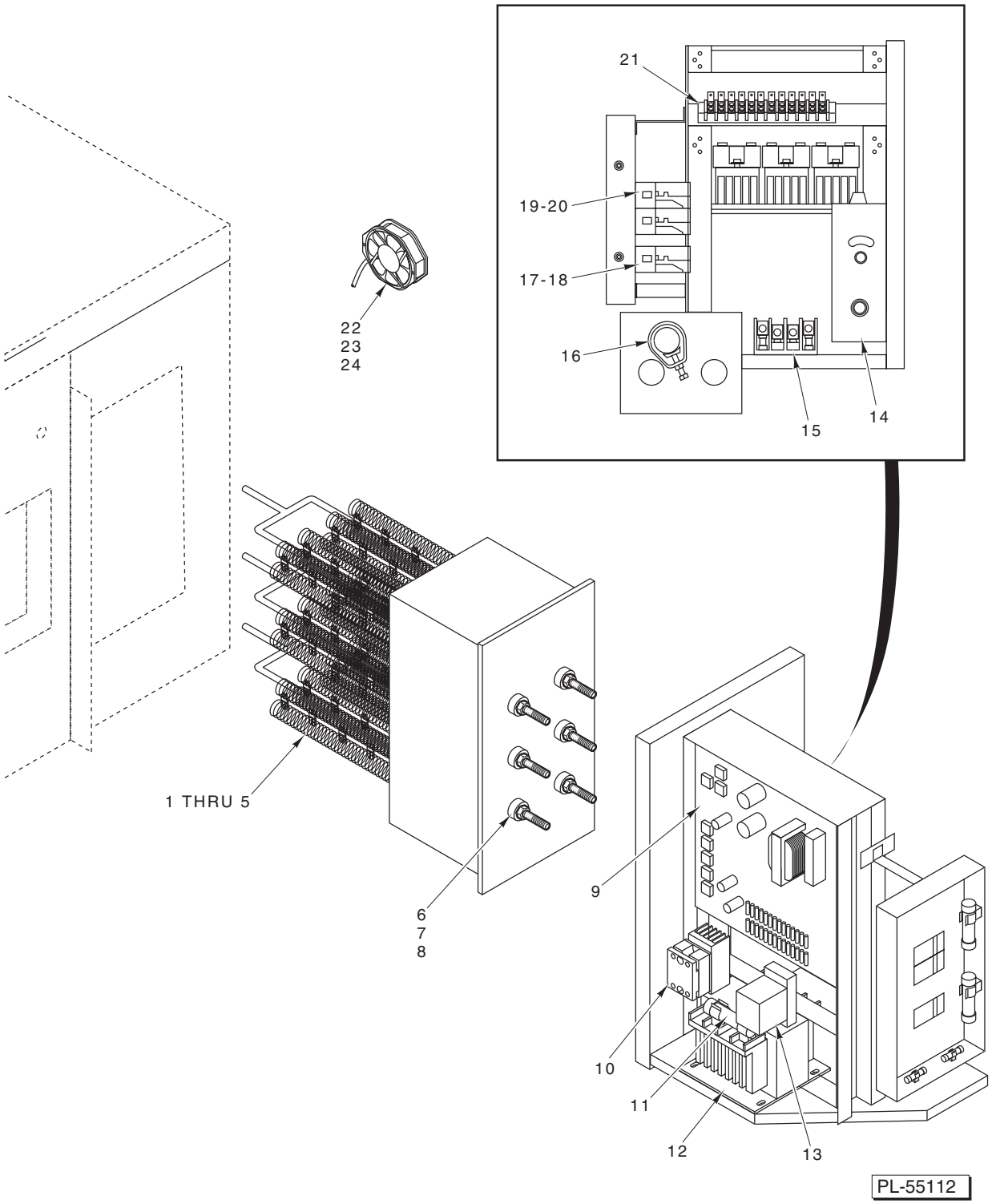

HEATING ELEMENT ASSEMBLY
(ML-126188, ML-126189, & ML-126400)

HEATING ELEMENT ASSEMBLY
(ML-126188, ML-126189, & ML-126400)

ILLUS. PL-55112	PART NO.	NAME OF PART	AMT.
1	00-425820-00001	Element – Open Coil (3.33 kW) (208 V.) (ML-126188)	3
2	00-425497-00001	Element – Open Coil (5.0 kW) (208 V.) (ML-126189 & ML-126400)	3
3	00-425821-00001	Element – Open Coil (3.33 kW) (208 V.) (ML-126188)	3
4	00-425498-00001	Element – Open Coil (5.0 kW) (240 V.) (ML-126189 & ML-126400)	3
5	00-425822-00001	Element – Open Coil (3.33 kW) (480 V.) (ML-126188)	3
6	00-425880-00001	Ferrule – Ceramic	6
7	SC-114-64	Mach. Screw 10-32 x 1 3/4 Slotted Rd. Hd.	6
8	NS-046-88	Nut Assy. 10-32 Hex KEPS	18
9	00-426559-00001	Board – Speed Control	1
10	00-425503-00001	Relay – Solid State (240 V.) (Motor)	1
11	00-426394-00001	Fuse (2 Amp.) (Transformer)	1
12	00-425507-00001	Transformer (220 V. Pri.) (110 V. Sec.)	1
13	00-425501-00001	Power Supply – DC	1
14	00-425682-00001	Relay (W/Heat Sink)	3
15	00-425994-00001	Block – Terminal (4 Pole)	1
16	00-425983-00001	Strain Relief 3/4	1
17	00-425672-00001	Holder – Fuse (Double)	1
18	00-425675-00001	Fuse (50 Amp.) (Heating Element)	2
19	00-425660-00001	Holder – Fuse (Single)	1
20	00-425671-00001	Fuse (20 Amp.) (Blower Motor)	1
21	00-425871-00001	Block – Terminal (12 Pole)	1
22	00-426464-00001	Fan – Axial (230 V.)	1
23	00-425065-00001	Guard – Axial Fan Cover	1
24	00-425066-00001	Cord – Axial Fan	1
	00-425502-00002	Control – High Limit	1

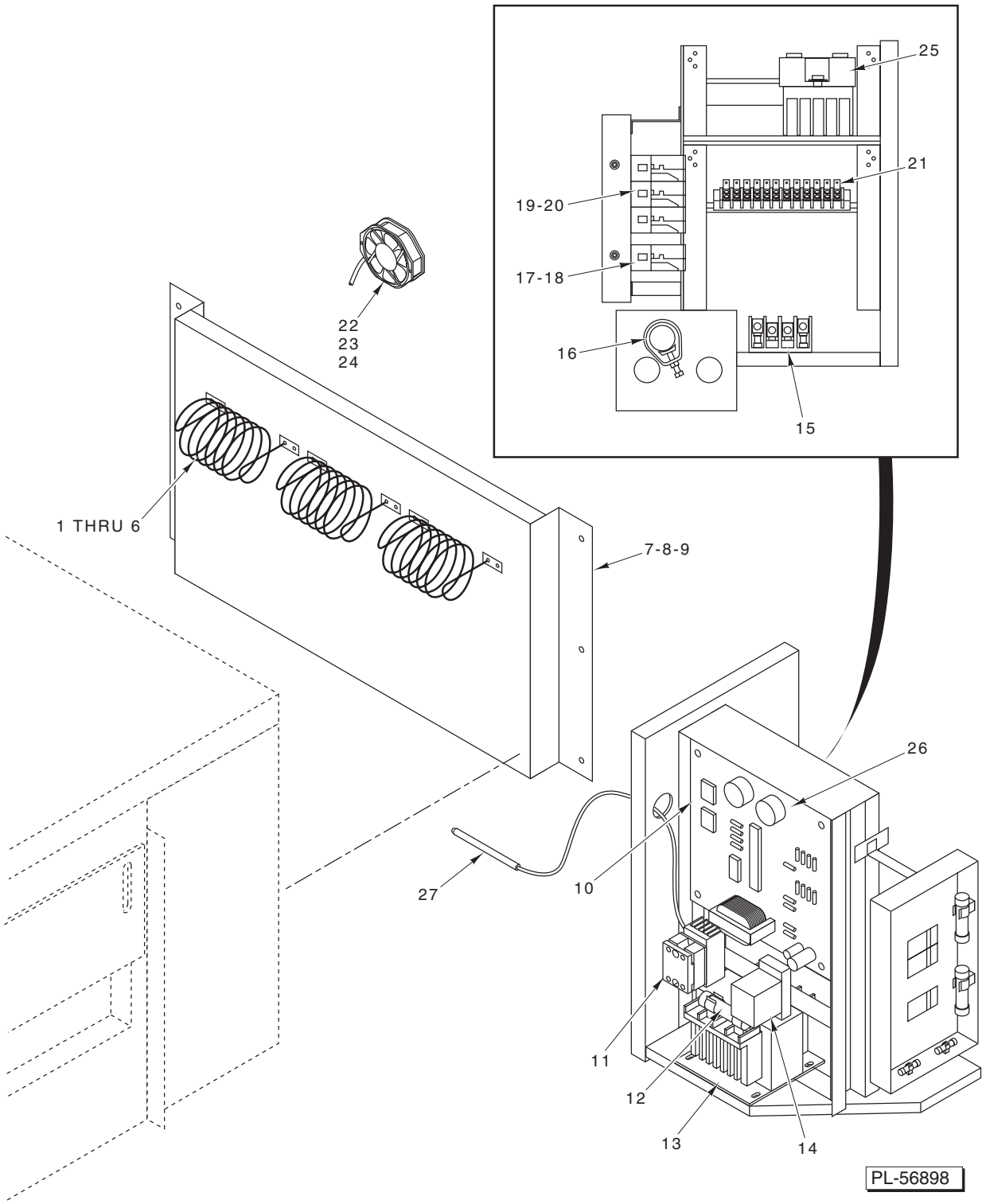

HEATING ELEMENT ASSEMBLY
(ML-136010, ML-136011, & ML-136012)

HEATING ELEMENT ASSEMBLY
(ML-136010, ML-136011, & ML-136012)

ILLUS. PL-56898	PART NO.	NAME OF PART	AMT.
1	00-855341-00001	Element – Tubular (3.4 kW) (208 V.) (ML-136010)	1
2	00-855341-00003	Element – Tubular (3.4 kW) (220 V.) (ML-136010)	1
3	00-855341-00005	Element – Tubular (3.4 kW) (240 V.) (ML-136010)	1
4	00-855341-00002	Element – Tubular (5 kW) (208 V.) (ML-136011 & ML-136012)	1
5	00-855341-00004	Element – Tubular (5 kW) (220 V.) (ML-136011 & ML-136012)	1
6	00-855341-00006	Element – Tubular (5 kW) (240 V.) (ML-136011 & ML-136012)	1
7	00-425880-00001	Ferrule – Ceramic	6
8	SC-114-64	Mach. Screw 10-32 x 1 3/4 Slotted Rd. Hd.	6
9	NS-046-88	Nut Assy. 10-32 Hex KEPS	18
10	00-426559-00001	Board – Speed Control	1
11	00-425503-00001	Relay – Solid State (240 V.) (Motor)	1
12	00-426394-00001	Fuse (2 Amp.) (Transformer)	1
13	00-425507-00001	Transformer (220 V. Pri.) (110 V. Sec.)	1
14	00-425501-00001	Power Supply – DC	1
15	00-425994-00001	Block – Terminal (4 Pole)	1
16	00-425983-00001	Strain Relief 3/4	1
17	00-425672-00001	Holder – Fuse (Double)	1
18	00-425675-00001	Fuse (50 Amp.) (Heating Element)	2
19	00-425660-00001	Holder – Fuse (Single)	1
20	00-425671-00001	Fuse (20 Amp.) (Blower Motor)	1
21	00-425871-00001	Block – Terminal (12 Pole)	1
22	00-426464-00001	Fan – Axial (230 V.)	1
23	00-425065-00001	Guard – Axial Fan Cover	1
24	00-425066-00001	Cord – Axial Fan	1
25	00-855341-00008	Control – Relay Power W/Heat Sink	1
26	00-855341-00007	Board – High Limit Control	1
27	00-855341-00009	Thermocouple – High Limit Probe	1

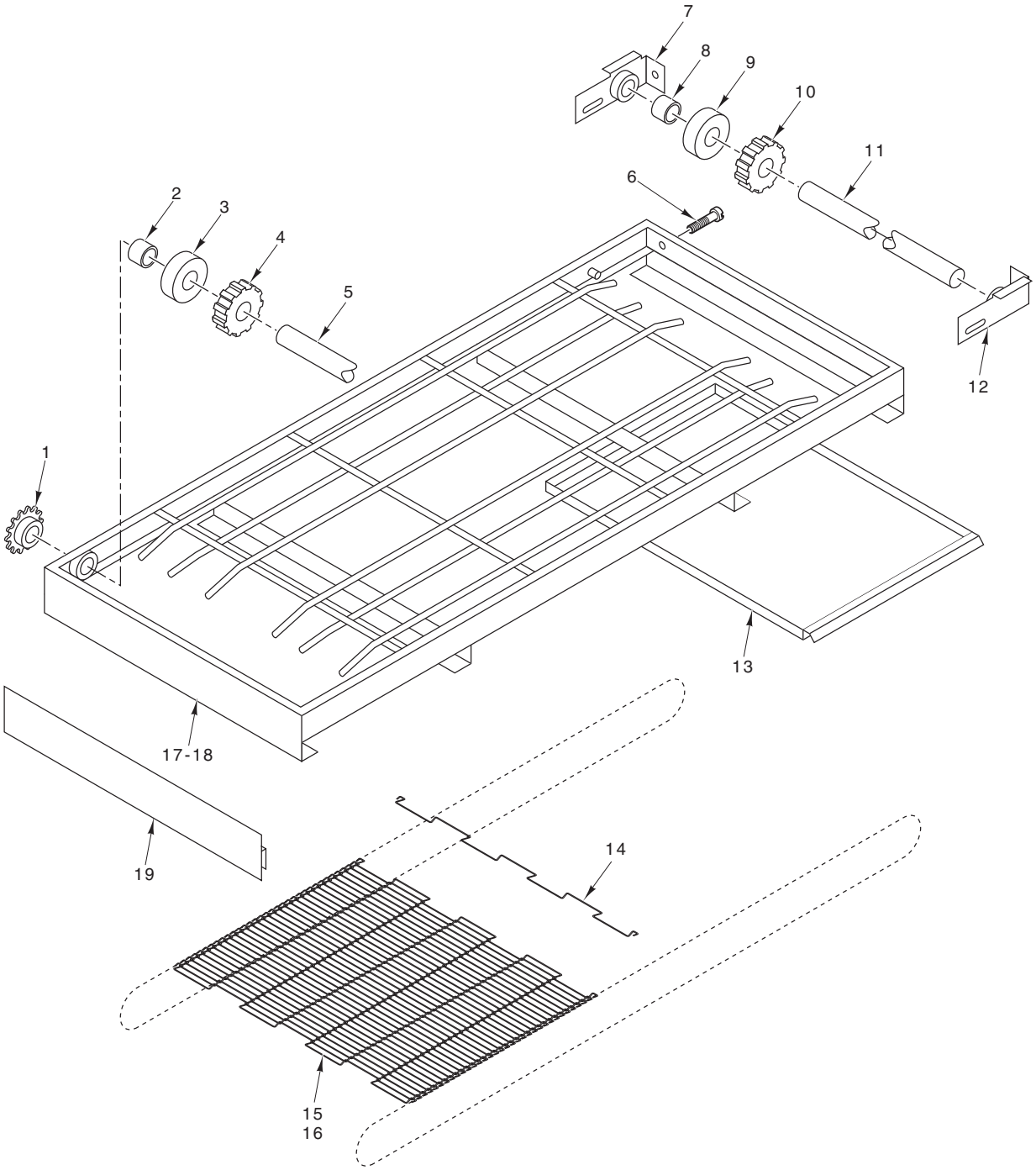

CONVEYOR ASSEMBLY

CONVEYOR ASSEMBLY

ILLUS. PL-55115	PART NO.	NAME OF PART	AMT.
1	00-425444-00001	Sprocket – Drive	1
2	00-425446-00001	Bushing – Shaft	2
3	00-425447-00001	Blank – Belt	2
4	00-425448-00001	Sprocket – Belt	6
5	00-425445-00001	Shaft – Drive	1
6	SC-022-36	Mach. Screw 1/4-20 x 1 1/4 Slotted Flat Hd.	2
7	00-425673-000G1	Tensioner – Belt	1
8	00-425446-00001	Bushing – Shaft	2
9	00-425447-00001	Blank – Belt	6
10	00-425448-00001	Sprocket – Belt	2
11	00-425480-00001	Shaft – Idle	1
12	00-425673-000G1	Tensioner – Belt	1
13	00-425475-00001	Pan – Crumb 18 In.	2
14	00-425476-00001	Strand – Splicing 18 In.	2
15	00-425449-00001	Wire – Belt (18 In.) (ML-126188, ML-126400, ML-136010, & ML-136011)	1
16	00-425477-00001	Wire – Belt (18 In.) (ML-126189 & ML-136012)	1
17	00-425676-000G1	Conveyor Assy. (ML-126188, ML-126400, ML-136010, & ML-136011)	1
18	00-425677-000G1	Conveyor Assy. (ML-126189 & ML-136012)	1
19	00-425450-00001	Stop – Product	1

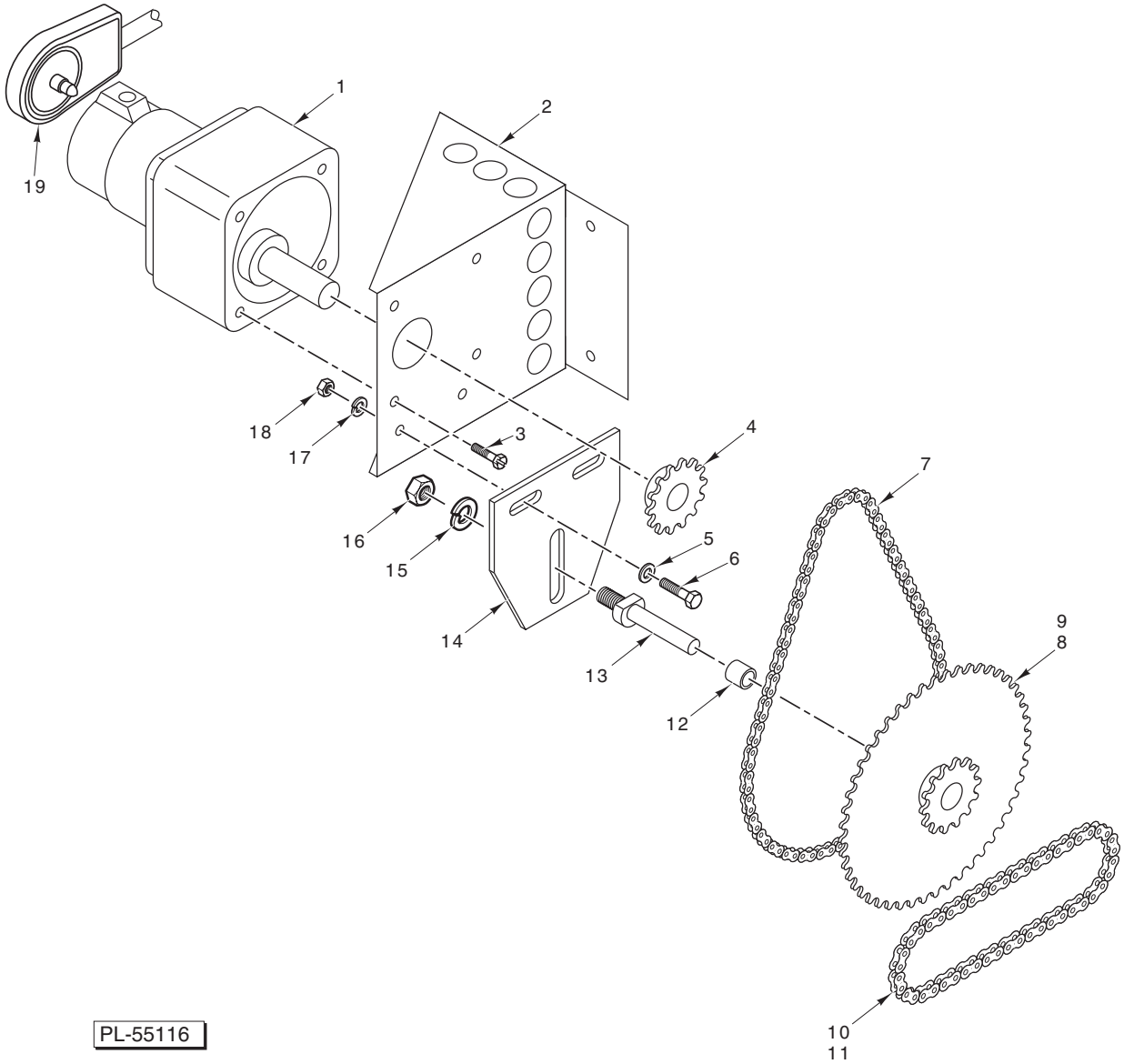

CONVEYOR DRIVE MOTOR

CONVEYOR DRIVE MOTOR

ILLUS. PL-55116	PART NO.	NAME OF PART	AMT.
1	00-427037-00001	Drive – Belt (Gearmotor)	1
2	00-425857-00001	Plate – Gearmotor Mounting	1
3	SC-114-03	Mach. Screw 10-32 x 1/2 Slotted Hex Washer Hd.	4
4	00-425072-00001	Sprocket (Gearmotor)	1
5	WS-003-03	Washer	2
6	SC-110-26	Mach. Screw 1/4-20 x 1 Hex Hd.	4
7	00-425442-00001	Chain – Motor to Reducer	1
8	00-425073-000G1	Sprocket Assy. – Reducer (Incls. Item 12) (ML-126188, ML-126400, ML-136010, & ML-136011)	1
9	00-425074-00001	Sprocket Assy. – Reducer (Incls. Item 12) (ML-126189 & ML-136012)	1
10	00-425533-00001	Chain – Reducer to Conveyor (ML-126188, ML-126400, ML-136010, & ML-136011)	1
11	00-425540-00001	Chain – Reducer to Conveyor (ML-126189 & ML-136012)	1
12	00-425071-00001	Bushing – Reducer	1
13	00-425070-00001	Pin – Sprocket (SST)	1
14	00-425858-00001	Support – Gear Reducer	1
15	WS-006-33	Washer	1
16	NS-015-13	Nut 3/8-16 Hex (SST)	1
17	WS-006-17	Washer	2
18	NS-013-01	Nut 1/4-20 Hex	2
19	00-426753-00001	Sensor – Speed Control	1

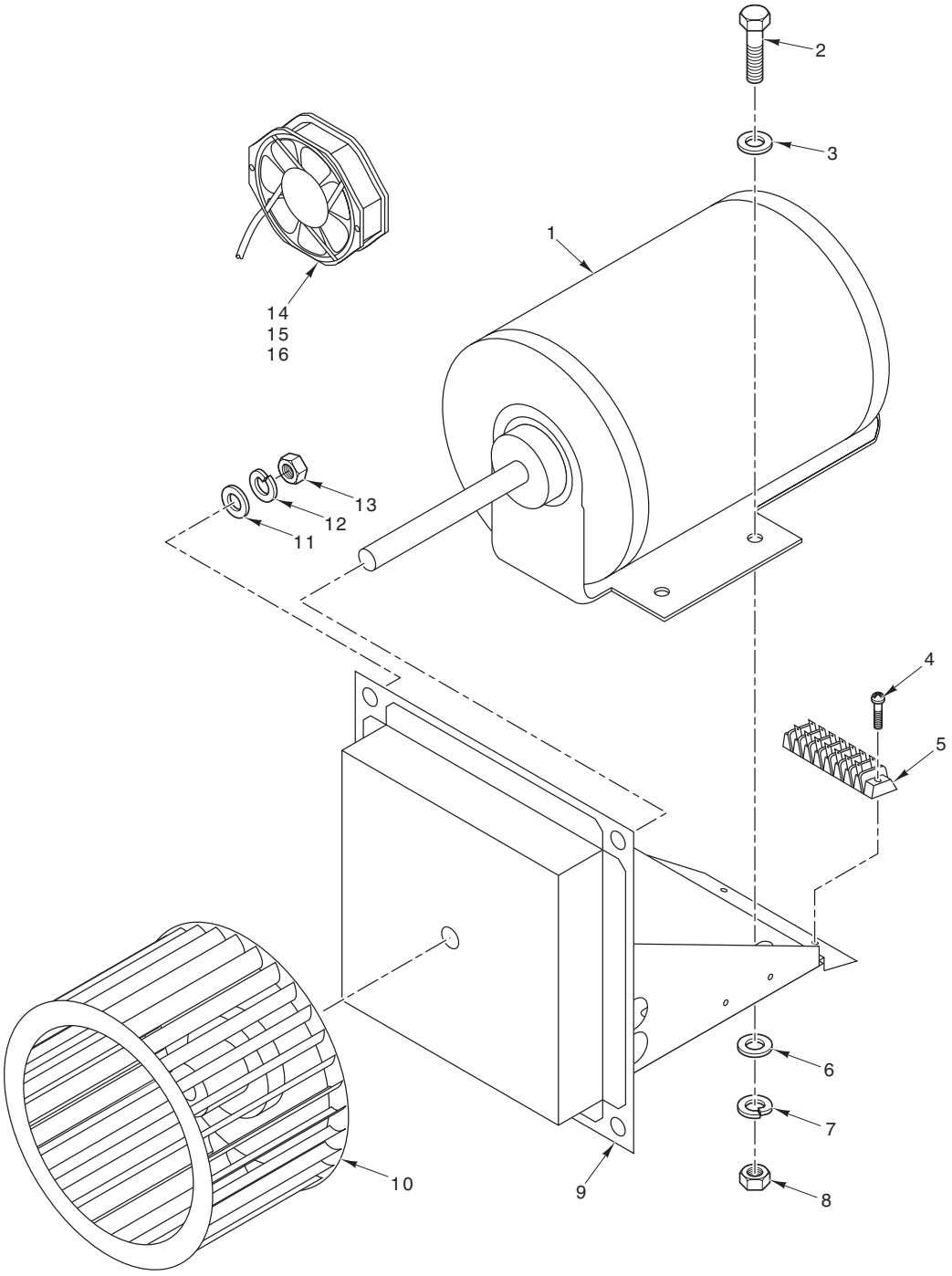

PL-55153

BLOWER MOTOR AND FAN

BLOWER MOTOR AND FAN

ILLUS. PL-55153	PART NO.	NAME OF PART	AMT.
1	00-425052-00001	Motor – Blower, High Temp	1
2	SC-110-26	Mach. Screw 1/4-20 x 1 Hex Hd.	4
3	WS-003-03	Washer	4
4	SD-036-46	Self-Tapping Screw 6-20 x 5/8 Slotted Pan Hd., Type BT	2
5	00-425452-00001	Block – Terminal	1
6	WS-003-03	Washer	4
7	WL-006-17	Lockwasher 1/4 Helical (SST)	4
8	NS-013-01	Nut 1/4-20 Hex	4
9	00-425851-000G1	Support Assy. – Blower Motor	1
10	00-425053-00001	Blower – Wheel	1
11	WS-006-33	Washer	4
12	WL-006-28	Lockwasher 3/8 Helical (SST)	4
13	NS-015-13	Nut 3/8-16 Hex (SST)	4
14	00-426464-00001	Fan – Axial (230 V.)	1
15	00-425065-00001	Guard – Axial Fan Cover	1
16	00-425066-00001	Cord – Axial Fan	1

ACCESSORIES AND LEGS

ILLUS. PL-55154	PART NO.	NAME OF PART	AMT.
1	00-425683-000G1	Legs (4 In.) (Set of 4) (SST) (ML-126188, ML-126189, ML-136010, & ML-136011)	1
2	00-425686-000G2	Stand (24 In.) W/Shelf & Casters (Single Section & Double Stack Oven) (ML-126188, ML-126400, ML-136010, & ML-136011)	1
3	00-425687-000G2	Stand (13 In.) W/Casters (Triple Stack Oven) (ML-126188, ML-126400, ML-136010, & ML-136011)	1
4	00-425688-000G2	Stand (24 In.) W/Shelf & Casters (Single Section & Double Stack Oven) (ML-126189 & ML-136012)	1
5	00-425689-000G2	Stand (13 In.) W/Casters (SST) (Triple Stack Oven) (ML-126189 & ML-136012)	1
6	00-425690-000G2	Extension (12 In. x 18 In.) (Left Side)	2
7	00-425691-000G2	Extension (12 In. x 18 In.) (Right Side)	2