CATALOG OF REPLACEMENT PARTS



Final Construction - P660 Mixer
ML- 104386, ML - 104388, ML - 134152, ML - 134154, ML - 134198, ML - 134200

A product of HOBART 701 S. RIDGE AVENUE TROY, OHIO 45374-0001

FORM 18835 Rev. B (January 2019)

 © HOBART 2019

Table of Contents

5 ELECTRICAL UNIT F18835
7 BASE AND PEDESTAL UNIT F18835
9 SHIFTING UNIT F18835
11 MOTOR F18835
13 MOTOR PARTS (3 PHASE) F18835
15 MOTOR PARTS (1 PHASE) F18835
17 TRANSMISSION CASE UNIT F18835
19 BOWL SUPPORT AND LIFT UNIT F18835
23 TRANSMISSION UNIT (2 SPEED) (PREVIOUS CONSTRUCTION) (SEE TSB 651C & 998)
27 TRANSMISSION UNIT (2 SPEED) (CURRENT CONSTRUCTION) F18835
31 TRANSMISSION UNIT (1 SPEED) (SBA) F18835
35 PLANETARY UNIT F18835
37 #12 ATTACHMENT HUB UNIT F18835
39 BOWL GUARD UNIT (PREVIOUS CONSTRUCTION) (PRIOR TO SERIAL NUMBER 311275_6)
41 BOWL GUARD UNIT (CURRENT CONSTRUCTION) F18835
43 BOWLS AND EQUIPMENT F18835
45 AGITATORS F18835

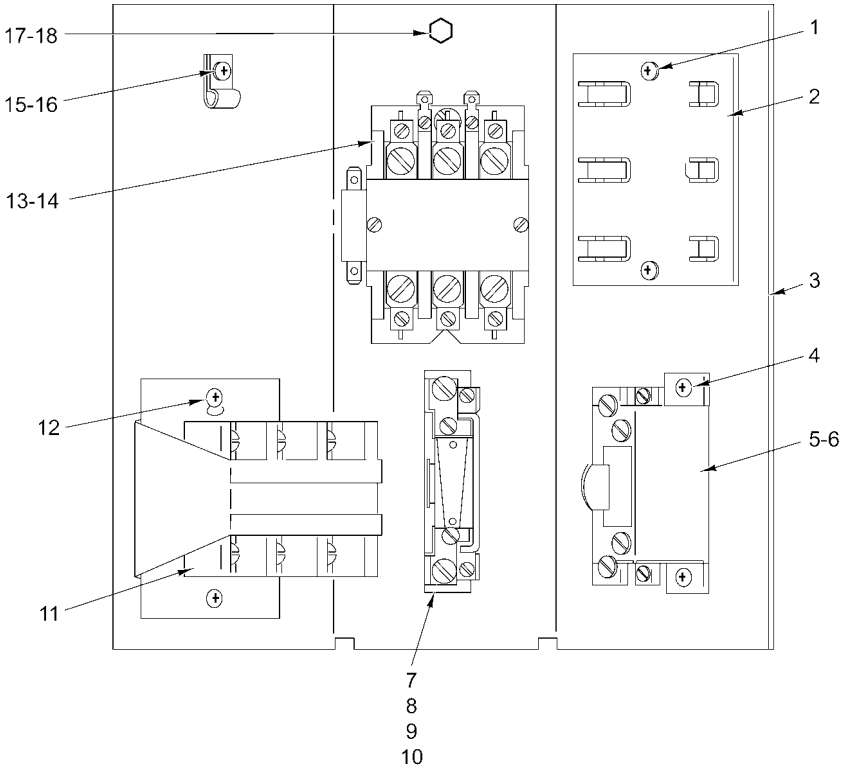

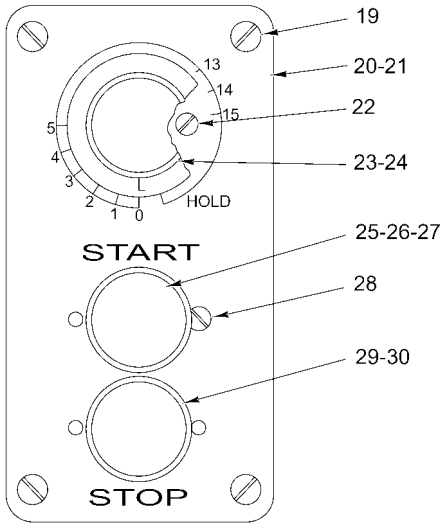

PL-57418

ELECTRICAL UNIT F18835

ELECTRICAL UNIT F18835

ILLUS. PL-57418	PART NO.	NAME OF PART	AMT.
1	SD-015-20	Self-Tapping Screw 10-32 x 3/8 Phil. Pan Hd., Type TT	2
2	00-121014	Board - Terminal (3 Ph.)	1
3	00-121823	Panel - Control	1
4	SD-015-20	Self-Tapping Screw 10-32 x 3/8 Phil. Pan Hd., Type TT	4
5	00-088196-009-1	Relay - Thermal Overload (3 Ph.)	1
*6		Heater Element (3 Ph.)(Give Elec. Spec., Mach. Model, & Motor Type.)	AR
7	00-088196-006-1	Relay - Thermal Overload (1 Ph.)(Give Elec. Spec., Mach. Model, & Motor Type.)	1
*8		Heater Element (1 Ph.)	AR
9	SC-008-09	Mach. Screw 10-24 x 3/8 Slotted Rd. Hd	2
10	WL-014-07	Lockwasher #10 External Shakeproof (SST)	2
11	00-087713-101-1	Contactor Assy. (208-240/60/3)	1
12	SD-015-20	Self-Tapping Screw 10-32 x 3/8 Phil. Pan Hd., Type TT	2
13	00-087713-103-1	Contactor Assy. (208-240/60/1)	1
14	SD-038-32	NLA - Obsolete--Self-Tapping Screw 10-32 x 1/2 Phil. Pan Hd., Type TT	2
15	00-078752-00010	Clamp - Cable (1 Ph.)	3
16	SD-015-20	Self-Tapping Screw 10-32 x 3/8 Phil. Pan Hd., Type TT	3
17	SC-036-14	Cap Screw 1/4-20 x 1/2 Hex Hd	1
18	WL-003-38	Lockwasher 1/4 Helical	1
19	00-123131	Screw - Serrated 8-32 x 3/8	4
20	00-291729	Plate - Switch	1
21	00-437324	Gasket	1
22	SC-013-07	Mach. Screw 5-40 x 1/4 Slotted Flat Hd	2
23	00-291748	Knob - Timer	1
24	00-294650-004-2	Timer Assy. (208-240 V., 60 Hz.)	1
25	00-087711-183-4	Switch - Push Button (N.O.) (Start)	1
26	00-291750	Insulator - Switch	1
27	00-102467-00001	Cap - Push Button (Start) (Black)	1
28	SC-013-12	Mach. Screw 6-32 x 1/4 Slotted Flat Hd	4
29	00-087711-183-2	Switch - Push Button (N.C.) (Stop)	1
30	00-102467-00002	Cap - Push Button (Stop) (Red)	1
**	00-439102-00001	Timer Upgrade Kit (120 VAC)	1
**	00-439102-00002	Timer Upgrade Kit (240 VAC)	1
***	TL-084919	Anti-Electrostatic Damage Kit (Use w/Timer Upgrade Kit.)	1

* Give Electrical Spec, Machine, Model and Motor Type

** An upgrade kit to add the electronic timer is available for installation on P660 mixers built since 1984, including the following ML numbers ML-33373 thru ML-33383,ML-33631 thru ML-33642, ML-33395 thru ML-33398, and ML-38440

*** Use with Timer Upgrade Kit

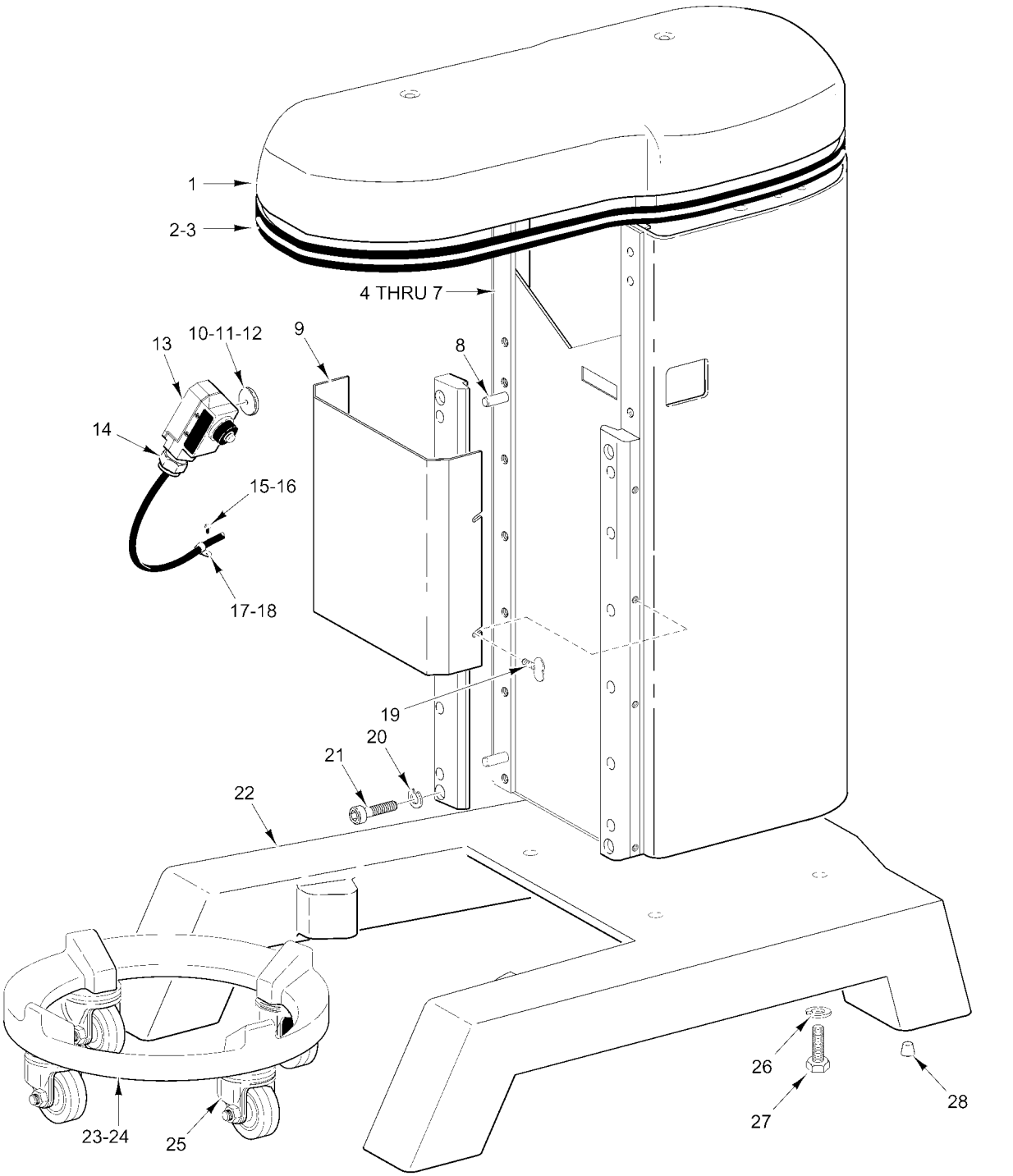

BASE AND PEDESTAL UNIT F18835

BASE AND PEDESTAL UNIT F18835

ILLUS. PL-57416	PART NO.	NAME OF PART	AMT.
1	00-478571-00004	Top Cover Assy. (Incls. Items 2 & 3)	1
2	00-123687-00002	Gasket (39 3/4 In.)	1
3	00-123687-00003	Gasket (42 In.)	1
4	00-121821-00005	Pedestal Assy	1
5	00-118544-00001	Lug - Solderless	1
6	SD-008-25	Self-Tapping Screw 10-16 x 1/2 Slotted Pan Hd., Type B	1
7	WL-010-06	Lockwasher #10 External Shakeproof	1
8	00-011800-00143	Pin - Dowel 1/2 x 1-3/4 SAE	2
9	00-438099	Apron - Pedestal	1
10	00-437441	Spacer - Mounting	2
11	SC-091-31	Mach. Screw 6-32 x 1 1/2 Slotted Flat Hd	2
12	WL-014-03	Lockwasher #6 External (SST)	2
13	00-087711-060-1	Switch - Interlock	1
14	FE-022-84	Connector - Strain Relief	1
15	00-123109	Screw 6-32 x 3/8 Serrated Hd	1
16	WS-023-15	Washer	1
17	00-078752-00012	Clamp - Cable 1/4P	1
18	00-113703	Cable Tie	2
19	00-070641-00009	Thumb Screw	4
20	WL-004-06	Lockwasher 3/8 Light	12
21	SC-092-62	Cap Screw 3/8-16 x 1-1/2 Socket Fil. Hd	12
22	00-110222-00002	Base Assy. (Painted)	1
23	00-315011	Bowl Truck Assy. (Incls. Item 25) (Painted) (Packaged)	1
24	00-315013	Bowl Truck Assy. (Incls. Item 25) (Deluxe) (Packaged)	1
25	00-087669-00001	Caster - Bowl Truck	4
26	WL-004-11	Lockwasher 1/2 Helical	4
27	SC-062-83	Cap Screw 1/2-13 x 1-1/2 Hex Hd	4
28		Plug - Base (No Replacement Part Available.)	4
	00-315003	Adapter - Bowl Truck (60 to 40 & 30 Qt.) (Packaged)	1
	00-477596	Feet Kit (SST)	1

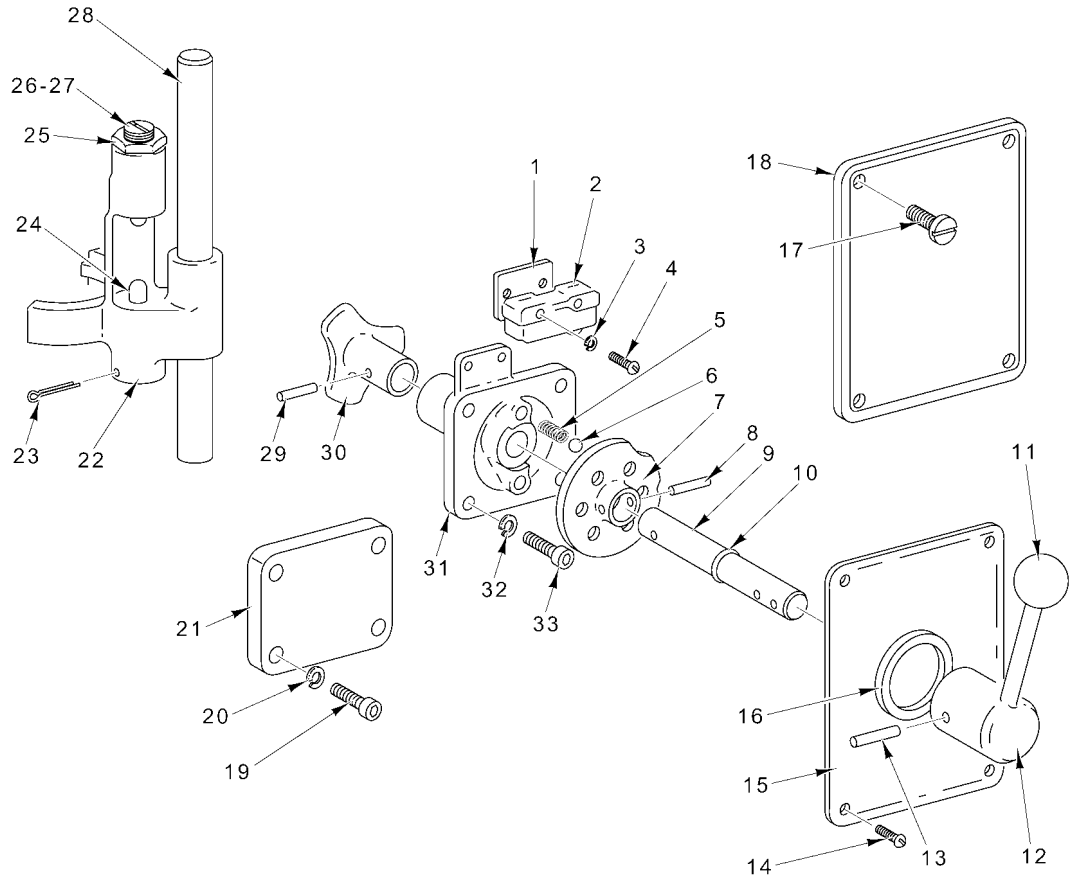

PL-57419

SHIFTING UNIT F18835

SHIFTING UNIT F18835

ILLUS. PL-57419	PART NO.	NAME OF PART	AMT.
1	00-060679	Insulator	1
2	00-087711-071-1	Switch - Interlock	1
3	WL-003-07	Lockwasher #6 Light	2
4	SC-009-45	Mach. Screw 6-32 x 1 Slotted Rd. Hd	2
5	00-007009	Spring - Detent (6 lb)	2
6	BA-002-18	Ball 3/8 Dia.	2
7	00-875485	Cam - Plate Detent	1
8	RP-002-10	Roll Pin 3/16 Dia. x 1 Lg.	1
9	00-060400	Shaft - Gear Shift	1
10	00-067500-00006	O-Ring	1
11	00-060468	Knob - Gear Shift	1
12	00-060469	Handle & Hub Assy	1
13	RP-002-03	Roll Pin 3/16 Dia. x 1 1/4 Lg.	1
14	00-123131	Screw - Serrated 8-32 x 3/8	4
15	00-292203	Plate - Shift Selector	1
16	00-060395	Grommet - Gear Shift	1
17	00-123131	Screw - Serrated 8-32 x 3/8	4
18	00-437326	Plate - Shift Selector (ML-104388) (SBA)	1
19	SC-040-16	Cap Screw 5/16-18 x 1 Hex Socket Hd	4
20	WL-003-44	Lockwasher 5/16 Helical	4
21	00-437506	Cover - Shifter Opening (ML-104388) (SBA)	1
22	00-024228	Yoke - Lower Shifting	1
23	PC-003-24	Cotter Pin 1/16 Dia. x 1 1/2 Lg.	1
24	00-024230	Plunger - Shifting Yoke	2
25	00-024232	Nut - Plunger Screw	1
26	00-024233	Spring - Shifting Plunger	2
27	00-060723	Screw - Shifting Plunger	2
28	00-024227	Shaft - Shifter	1
29	RP-002-05	Roll Pin 1/4 Dia. x 7/8 Lg.	1
30	00-292202	Gear Shift Cam Assy	1
31	00-060359	Bracket - Gear Shift	1
32	WL-003-44	Lockwasher 5/16 Helical	4
33	SC-040-16	Cap Screw 5/16-18 x 1 Soc. Fil Hd	4

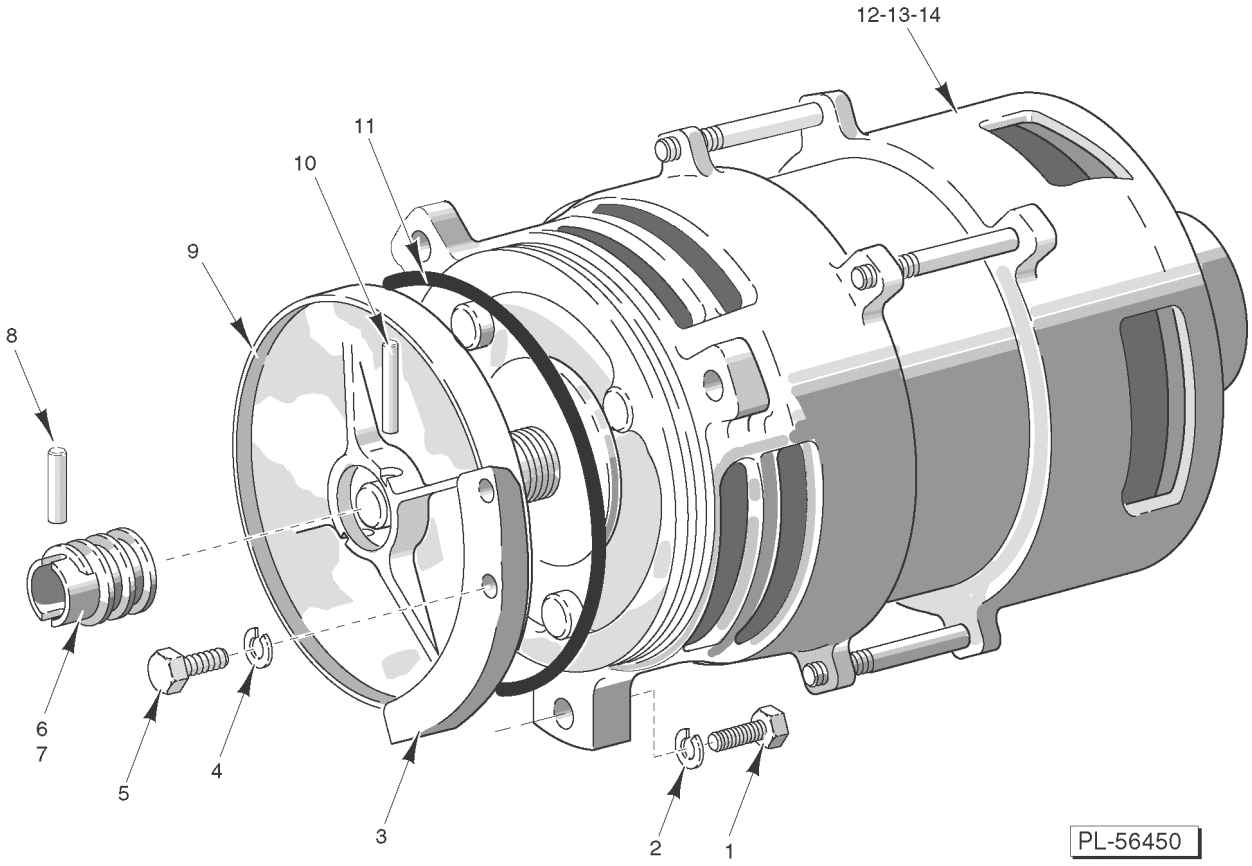

MOTOR F18835

MOTOR F18835

ILLUS. PL-56450	PART NO.	NAME OF PART	AMT.
1	SC-062-88	Cap Screw 1/2-13 x 1-1/4 Hex Hd	3
2	WL-004-11	Lockwasher 1/2 Light	3
3	00-024610	Guide - Oil Flinger	1
4	WL-003-43	Lockwasher 5/16 Light	2
5	SC-036-28	Cap Screw 5/16-18 x 1-1/4 Hex Hd	2
6	00-292279	Worm - Drive (3T) (2 Speed)	1
7	00-437525	Worm - Drive (1 Speed) (SBA)	1
8	RP-002-06	Roll Pin 1/4 Dia. x 1 Lg	1
9	00-291457-00002	Flinger - Oil	1
10	RP-002-28	Roll Pin 3/16 Dia. x 3/4 Lg	1
11	00-067500-00024	O-Ring	1
12	ML-33928-DU	Motor (208-240-480/60/3)	1
13	ML-40537-BH	Motor (208/60/1)	1
14	ML-40537-BY	Motor (240/60/1)	1

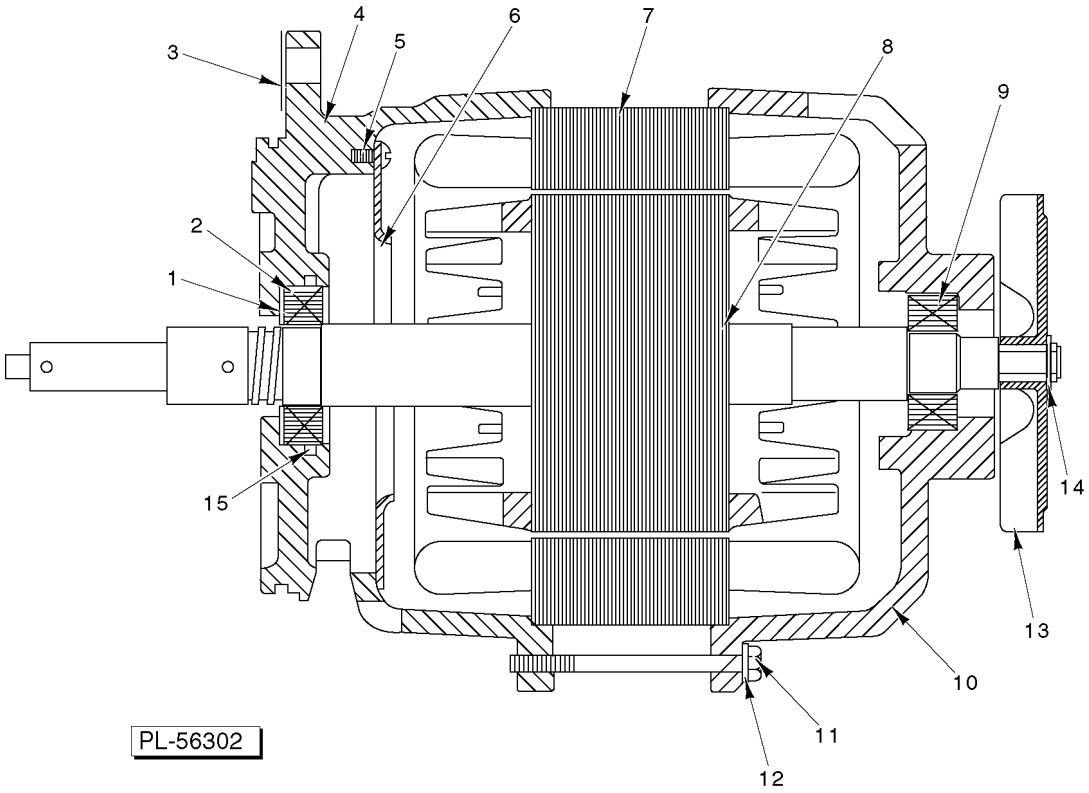

MOTOR PARTS
(3 PHASE) F18835

MOTOR PARTS
(3 PHASE) F18835

ILLUS. PL-56302	PART NO.	NAME OF PART	AMT.
1	SL-003-10	Loading Spring - N.D. #62	1
2	BB-017-26	Ball Bearing - NSK #6206	1
3	00-275152	Shim	AR
4	00-274697-00002	Bracket - Bearing (Gear End) (H600 Series & L800 220/380 V., 50 Hz., 3 Ph.)	1
5	SC-009-79	Mach. Screw 6-32 x 5/16 Slotted Rd. Hd	3
6	00-120864	Baffle - Air	1
7	00-065478-180-1	Stator Assy. (208-240-480/60/3)	1
8	00-015747-00309	Rotor Assy. (3 Ph.)	1
9	BB-016-23	Ball Bearing - Fafnir #W205PP	1
10	00-119537-00004	Bracket - Bearing	1
11	SC-111-02	Cap Screw 1/4-20 x 4 1/2 Hex Hd	4
12	WL-003-38	Lockwasher 1/4 Helical	4
13	00-292466-00001	Fan - Ventilating	1
14	RR-004-17	Retaining Ring	1
15	OR-001-02	O-Ring (Quad)	1

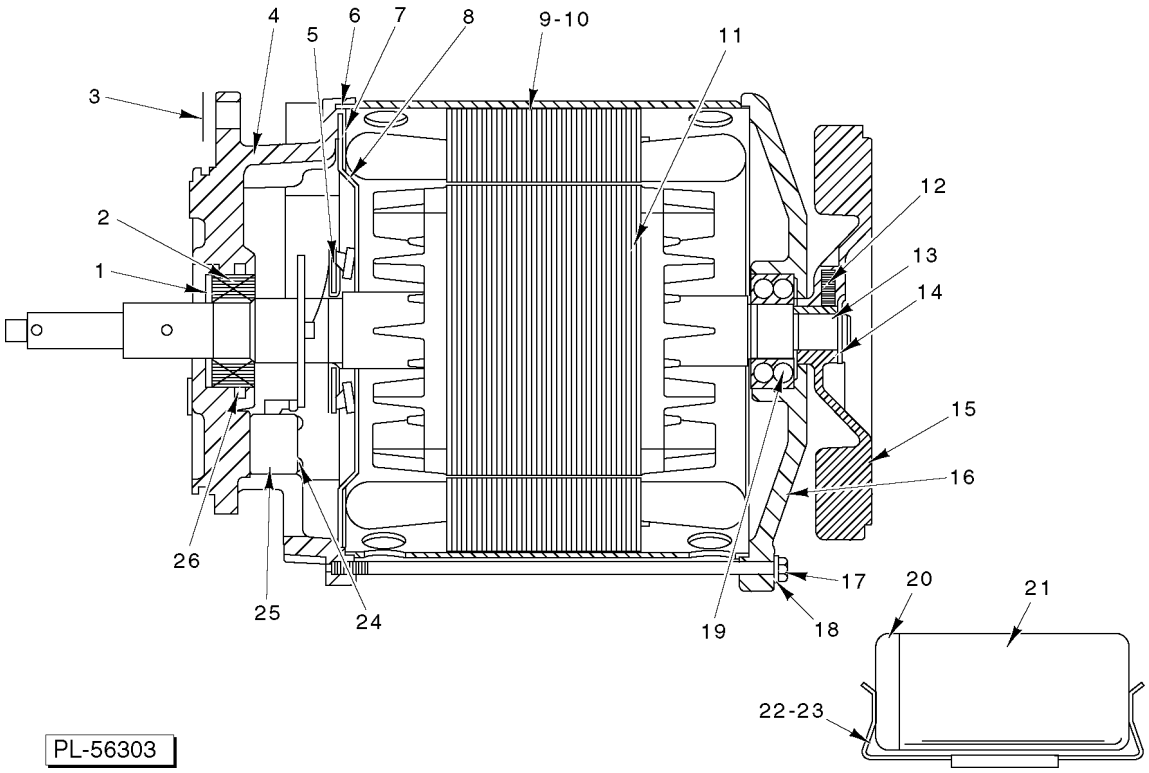

MOTOR PARTS
(1 PHASE) F18835

MOTOR PARTS
(1 PHASE) F18835

ILLUS. PL-56303	PART NO.	NAME OF PART	AMT.
1	SL-003-10	Loading Spring - N.D. #62	1
2	BB-017-34	Ball Bearing - Fafnir #W206PP	1
3	00-275152	Shim	AR
4	00-274965	Bracket - Bearing (Gear End)	1
5	00-117549-00001	Actuator Switch	1
6	RP-002-42	Roll Pin 3/32 Dia. x 3/8 Lg	1
7	SC-018-13	Mach. Screw 8-32 x 1/4 Slotted Pan Hd	4
8	00-089203-00001	Shroud - Fan	1
9	00-065477-161-1	Stator Assy. (208/60/1)	1
10	00-065477-161-2	Stator Assy. (240/60/1)	1
11	00-022275-00273	Rotor Assy	1
12	SC-047-12	Set Screw 1/4-20 x 3/8 Hex Hdls., Cup Pt	2
13	00-109070-00002	Key	1
14	RR-004-06	Retaining Ring	1
15	00-275183	Fan - Ventilating	1
16	00-294879-00002	Bracket - Bearing (Fan End)	1
17	00-080977-00007	Bolt - Hex Hd	4
18	WL-003-38	Lockwasher 1/4 Helical	4
19	BB-021-15	Ball Bearing - NSK #3206	1
20	00-070486-00004	End Cap	2
21	00-070487-00017	Capacitor	2
22	00-066621-00002	Bracket	2
23	SD-024-16	Self-Tapping Screw 10-24 x 1/2 Phil. Flat Hd., TypeTT	4
24	SC-009-85	Mach. Screw 6-32 x 1 1/4 Slotted Rd. Hd	2
25	00-117548	Switch - Starting (Stationary Part) (1 Ph.)	1
26	OR-001-02	O-Ring (Quad)	1

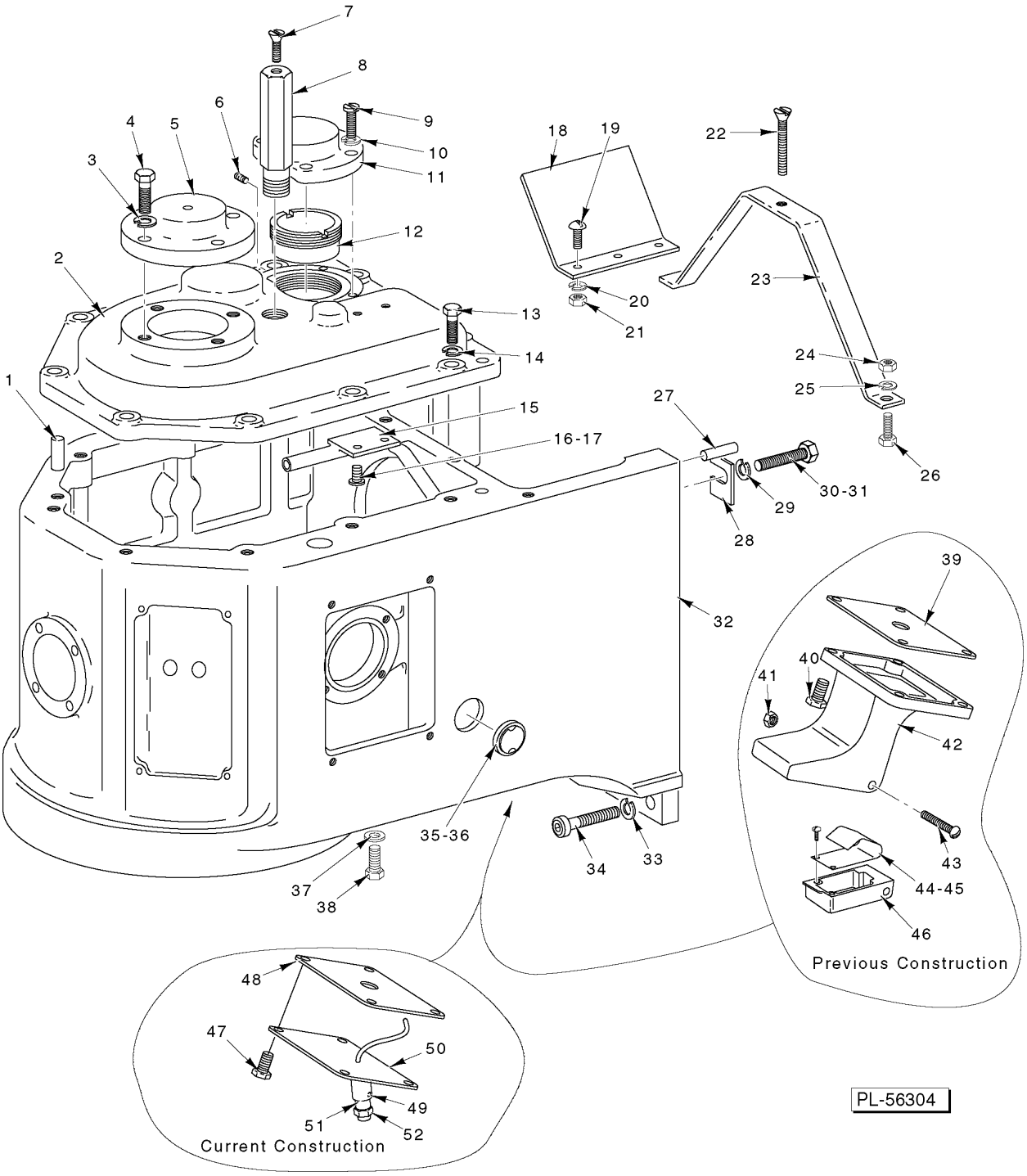

TRANSMISSION CASE UNIT F18835

TRANSMISSION CASE UNIT F18835

ILLUS. PL-56304	PART NO.	NAME OF PART	AMT.
1	00-011800-00224	Dowel	2
2	00-024203-00002	Cover - Transmission Case	1
3	WL-003-44	Lockwasher 5/16 Helical	4
4	SC-036-28	Cap Screw 5/16-18 x 1-1/4 Hex Hd	4
5	00-024255	Retainer - Planetary Bearing	1
6	SC-047-70	Set Screw 10-32 x 3/8 Hex Hdls., Cup Pt	2
7	SC-120-29	Mach. Screw 1/4-20 x 1 Phil. Oval Hd	1
8	00-292642	Support - Top Cover Front	1
9	SC-038-05	Cap Screw 1/4-20 x 1 Slotted Fil. Hd	4
10	WL-003-37	Lockwasher 1/4 Medium	4
11	00-024256	Retainer - Upper Worm Shaft Bearing	1
12	00-024254	Sleeve - Worm Gear Adjusting	1
13	SC-062-48	Cap Screw 3/8-16 x 1 1/8 Hex Hd	10
14	WL-004-06	Lockwasher 3/8 Light	10
15	00-024253-00002	Oil Delivery Tube & Plate Assy	1
16	SC-060-03	Mach. Screw 10-24 x 3/4 Slotted Rd. Hd	2
17	NS-032-01	Stop Nut 10-24 Flexloc	2
18	00-292409	Shield	1
19	SC-009-69	Mach. Screw 6-32 x 1/2 Slotted Rd. Hd	2
20	WL-003-09	Lockwasher #6 Helical	2
21	NS-009-07	Nut 6-32 Hex	2
22	SC-120-30	Mach. Screw 1/4-20 x 2 Phil. Oval Hd	1
23	00-479523	Strap - Top Anchoring	1
24	NS-013-01	Nut 1/4-20 Hex	2
25	WL-003-37	Lockwasher 1/4 Medium	2
26	SC-036-04	Mach Screw 1/4-20 x 3/4 Slotted Hex Hd	2
27	00-011800-00221	Dowel	2
28	00-068288	Shim (0.0179 In. Thk.)	AR
29	WL-004-11	Lockwasher 1/2 Helical	4
30	SC-062-66	NLA - Obsolete--Cap Screw 1/2-13 x 1 3/4 Hex Hd	2
31	SC-062-67	Cap Screw 1/2-13 x 2-1/4 Hex Hd	2
32	00-120561-00002	Case - Transmission	1
33	WL-004-11	Lockwasher 1/2 Helical	2
34	SC-040-36	Cap Screw 1/2-13 x 1-3/4 Hex Socket Hd	2
35	00-022793	Gauge - Oil Level	1
36	00-290488	Gasket - Oil Gauge	1
37	WS-021-21	Washer 0.500 x 0.750 x 0.093 (Nylon)	1
38	SC-041-42	Cap Screw 1/2-20 x 1 Hex Hd. (SST)	1
39	00-024665	Gasket - Transmission Case Cover Plate	1
40	SC-113-96	Mach. Screw 8-32 x 1/2 Slotted Hex Washer Hd	4
41	NS-031-08	Stop Nut Special 8-32 (SST)	1
42	00-437448-00002	Housing - Reed Switch	1
43	SC-116-66	Mach. Screw 8-32 x 2 Slotted Rd. Hd. (SST)	1
44		Spring - Reed Switch(For Service Use Items 49 thru 52.)	1
45	SC-018-50	Mach. Screw 6-32 x 1/4 Slotted Pan Hd	2
46	00-087711-304-1	Switch - Reed	1
47	SC-113-96	Mach. Screw 8-32 x 1/2 Slotted Hex Washer Hd	4
48	00-024665	Gasket - Transmission Case Cover Plate	1
49	SC-047-73	Set Screw 8-32 x 3/16 Hex Hdls., Cup Pt	1
50	00-874988-00001	Housing - Reed Switch	1
51	00-874959-00001	Tube - Reed Switch	1
52	00-087711-347-1	Switch - Reed	1
	00-087711	Reed Switch & Housing (Incls. Items 41 thru 46) (Prev. Constr.)	1
	00-874986-00001	Reed Switch & Housing (Incls. Items 49 thru 52) (Current Construction)	1

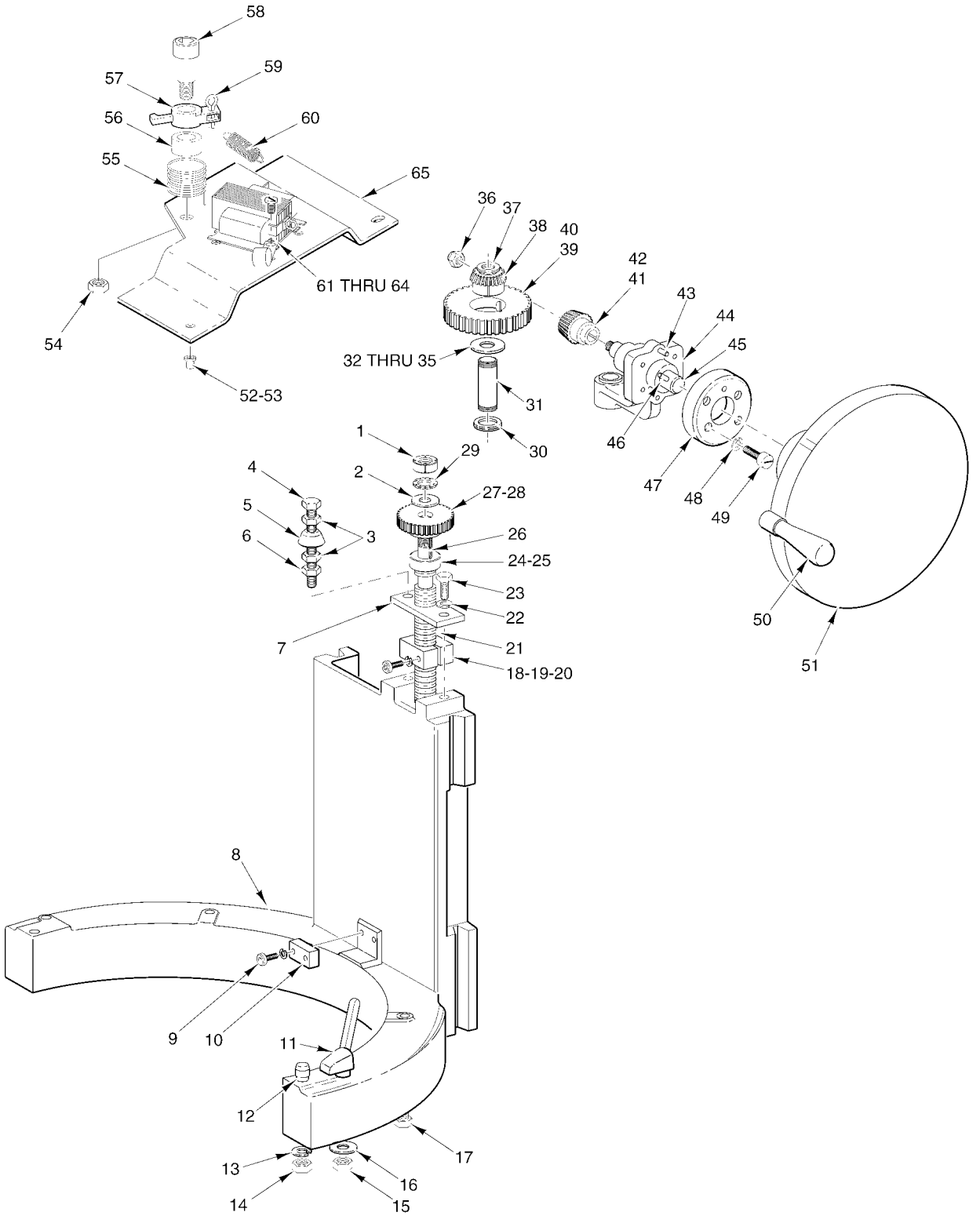

BOWL SUPPORT AND LIFT UNIT F18835

BOWL SUPPORT AND LIFT UNIT F18835

ILLUS. PL-57436	PART NO.	NAME OF PART	AMT.
1	NS-034-04	Lock Nut N.D. #N-03	1
2	WS-010-17	Washer	2
3	NS-048-24	Stop Nut 3/8-16 ESNA	2
4	SC-124-92	Cap Screw 3/8-16 x 3 1/2 Hex Hd	1
5	00-437430	Actuator - Bowl	1
6	NS-017-14	Jam Nut 3/8-16 Hex	1
7	00-024201	Retainer - Bowl Lift Nut	1
8	00-124685-00002	Support - Bowl	1
9	SC-040-10	Cap Screw 1/4-20 x 3/4 Hex Socket Hd	2
10	00-024296	Retainer - Bowl	1
11	00-065922-00019	Bowl Clamp (LH/RH)	2
12	00-120349	Stud - Bowl Locating	2
13	WL-004-11	Lockwasher #1	2
14	NS-017-27	Jam Nut 1/2-13 Hex	2
15	NS-046-18	Lock Nut 5/8-11 Hex Nylok	2
16	00-064636	Washer - Bowl Clamp	2
17	SC-037-74	Cap Screw 3/8-16 x 1-1/2 Hex Hd	1
18	00-024198	Nut - Bowl Lift Screw	1
19	SC-012-37	Mach. Screw 1/4-20 x 3/4 Slotted Fil. Hd	1
20	WL-004-40	Lockwasher #10 Helical	1
21	00-290052-00001	Screw - Bowl Lift	1
22	WL-004-06	Lockwasher 3/8 Light	1
23	SC-118-11	Cap Screw 3/8-16 x 7/8 Hex Hd	1
24	BB-005-30	Ball Bearing NSK #6203	1
25	WS-010-17	Washer	1
26	00-012430-00043	Key 3/16 Sq. x 7/16 Lg	1
27	00-024193	Gear - Bowl Lift (31T)	1
28	WS-010-17	Washer	1
29	WL-012-04	Lockwasher N.D.#W-03	1
30	RR-005-02	Retaining Ring (Spirolox)	1
31	00-024194	Shaft - Miter Gear	1
32	00-024614-00003	Washer - Miter Gear Spacer (0.086 In. Thk.)	AR
33	00-024614-00004	Washer - Miter Gear Spacer (0.081 In. Thk.)	AR
34	00-024614-00005	Washer - Miter Gear Spacer (0.076 In. Thk.)	AR
35	00-024614-00006	Washer - Miter Gear Spacer (0.071 In. Thk.)	AR
36	NS-032-29	Stop Nut 1/2-20 Flexloc	1
37	RR-005-02	Retaining Ring (Spirolox)	1
38	00-024195-00002	Gear - Bowl Lift Miter (23T) (Order With Item 39)	1
39	00-024192	Gear - Bowl Lift Screw (41T)	1
40	KW-003-03	Key - #404 Woodruff	1
41	00-024196-00002	Pinion - Bowl Lift Miter (23T) (Order With Item 36)	1
42	00-012430-00041	Key 3/16 Sq. x 11/16 Lg	1
43	RP-002-06	Roll Pin 1/4 Dia. x 1 Lg	2
44	00-089684	Handwheel Bracket & Bearing Assy	1
45	00-024191	Shaft - Hand Wheel	1
46	PG-007-19	Grooved Pin - 1/4x 2 3/4, Type E	2
47	00-024609-00001	Ring - Handwheel Brkt. Clamping	1
48	WL-003-48	Lockwasher 5/16 High Collar	4
49	SC-011-95	Mach. Screw 5/16-18 x 1 Slotted Fil. Hd	4
50	00-024765	Handle - Bowl Lift Handwheel	1
51	00-435235	Handwheel & Handle Assy. (Incls. Item 48)	1
52	00-120100	Nut - Vibration Mount	3
53	SC-037-87	Cap Screw 1/4-20 x 1 Hex Hd	3
54	NS-048-24	Stop Nut 3/8-16 ESNA	1
55	00-438575	Spring - Torsion	1

BOWL SUPPORT AND LIFT UNIT F18835

ILLUS. PL-57436	PART NO.	NAME OF PART	AMT.
56	00-438516	Spacer - Lever	1
57	00-438413-00002	Lever - Bowl Lock	1
58	SC-086-24	Shoulder Screw 1/2 Dia. x 1 1/2 Lg. Hex Soc. Hd	1
59	PC-006-32	Cotter Pin	1
60	00-438494	Spring - Extension	1
61	00-875737-00002	Solenoid (230 V. Coil)	1
62	SC-018-20	Mach. Screw 10-24 x 1/2 Slotted Pan Hd	4
63	NS-048-20	Stop Nut 10-24 Flexloc	4
64	00-078752-00011	Clamp	1
65	00-438414	Plate - Bowl Lock	1

NOTES

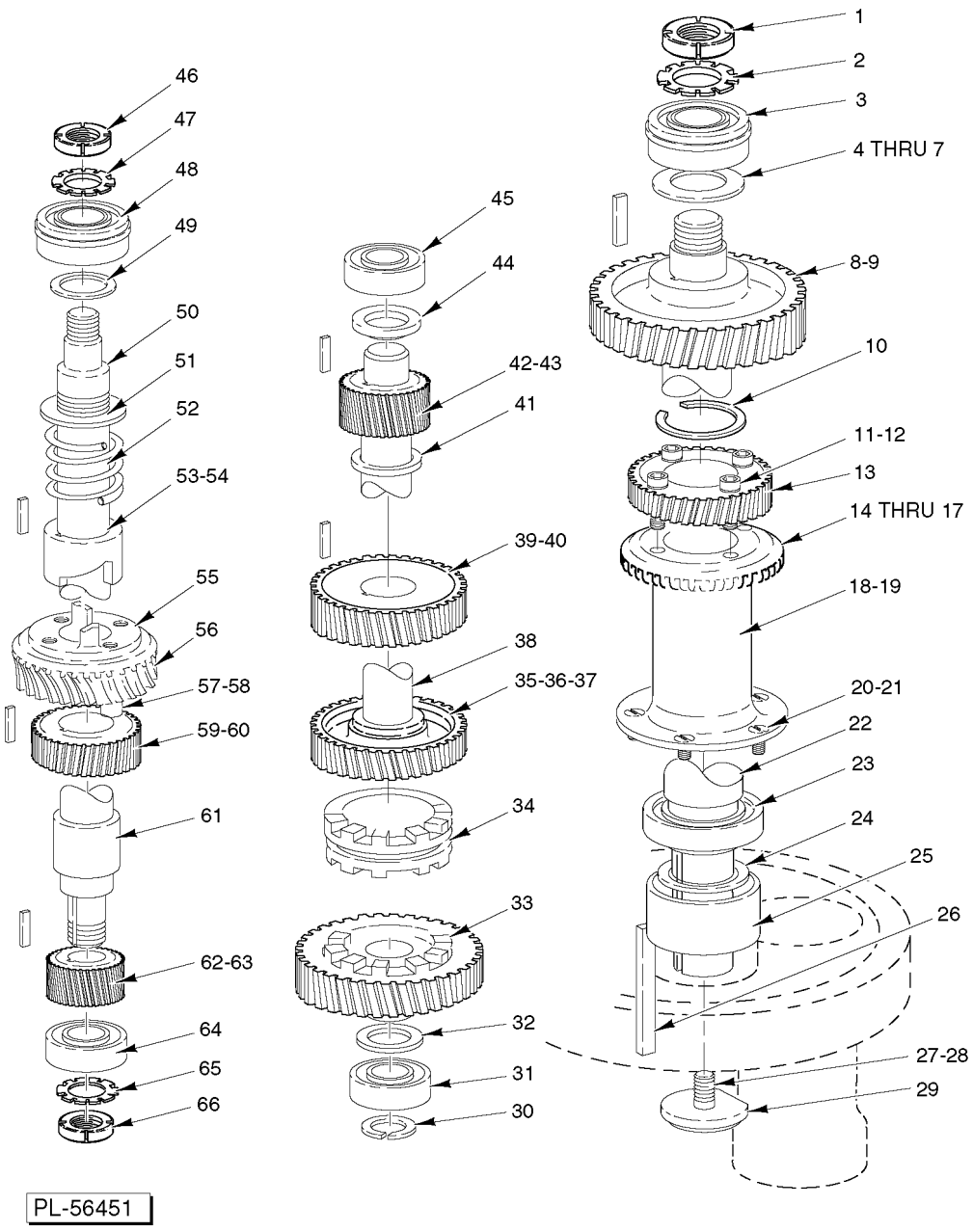

TRANSMISSION UNIT
(2 SPEED)
(PREVIOUS CONSTRUCTION)
(SEE TSB 651C & 998)

TRANSMISSION UNIT
(2 SPEED)
(PREVIOUS CONSTRUCTION)
(SEE TSB 651C & 998)*

ILLUS. PL-56451	PART NO.	NAME OF PART	AMT.
1	NS-034-07	Lock Nut N.D. #N-06	1
2	WL-012-07	Lockwasher N.D. #W-06	1
3	BB-009-48	Ball Bearing - MRC #5206SBK-FFG	1
4	00-479808	Shim - Planetary Shaft	AR
5	WS-030-91	Washer (0.003 In. Thk.)	AR
6	WS-030-92	Washer (0.005 In. Thk.)	AR
7	WS-030-93	Washer (0.010 In. Thk.)	AR
8	00-109070-00021	Key	1
9	00-292193-00002	Gear - Upper Planetary Shaft (52T)	1
10	RR-009-16	Retaining Ring	1
11	SC-040-15	Cap Screw 5/16-18 x 1-1/4 Hex Socket Hd	4
12	WL-003-48	Lockwasher 5/16 High Collar	4
13	00-292192	Gear - Lower Planetary Shaft (33T)	1
14	00-437327-00002	Gear - Spiral Bevel (41T) (Order With Item 17)	1
15	00-292183	Seal - Quad X	1
16	00-274780	Spacer - Planetary Shaft	2
17	00-061914-00002	Pinion - Bevel (16T) (Order With Item 14)	1
18	00-121478-00001	Chimney	1
19	00-067500-00102	O-Ring	1
20	SC-013-79	Mach. Screw 1/4-20 x 1/2 Slotted Flat Hd	5
21	WL-009-08	Lockwasher 1/4 Ctsk. External	5
*22		Shaft - Planetary	1
23	BB-015-26	Ball Bearing - Fafnir #P9109PP	1
24	00-024543	Washer - Planetary Spacer	1
25	00-060486	Shield - Planetary Oil	1
26	00-012430-00195	Key	1
27	SC-041-66	Cap Screw 3/8-24 x 1-1/4 Hex Hd. (SST)	1
28	WL-006-27	Lockwasher 3/8 Light (SST)	1
29	00-024266-00001	Washer - Planetary	1
30	RR-005-04	Retaining Ring (Spirolox)	1
31	BB-018-33	Ball Bearing - Fafnir #205KFA	1
32	00-024210		1
33	00-024539	Lower Clutch & Lower Gear Assy. (49T)	1
34	00-024213	Clutch - Shifting	1
35	00-024538	Lower Clutch & Upper Gear Assy. (41T)	1
36	00-060767	Washer - Clutch Shaft	1
37	RR-004-13	Retaining Ring (Truarc)	1
38	00-438136	Clutch Shaft Service Assy	1
39	00-012430-00058	Key	1
40	00-292187	Lower Gear Assy. (35T)	1
41	RR-011-55	Retaining Ring	1
42	00-292188	Upper Gear Assy. (20T)	1
43	00-109070-00002	Key	1
44	00-024210	Spacer - Clutch Shaft	1
45	BB-009-04	Ball Bearing NSK #5205TNG	1
46	NS-034-05	Lock Nut N.D. #N-04	1
47	WL-012-05	Lockwasher N.D. #W-04	1
48	BB-009-37	Ball Bearing SKF #5204-ZNBR	1
49	RR-005-10	Retaining Ring (Spirolox)	1
50	00-024204	Shaft - Worm Gear	1
51	00-024238	Washer - Shock Absorber	2
52	00-009733	Spring - Worm Shaft	1
53	00-024546	Key - Compressor to Shaft	1
54	00-061498	Compressor - Shock Absorber	1
55	00-292993	Flange - Shock Absorber Drive	1

TRANSMISSION UNIT
(2 SPEED)
(PREVIOUS CONSTRUCTION)
(SEE TSB 651C & 998)*

ILLUS. PL-56451	PART NO.	NAME OF PART	AMT.
56	00-292181	Worm Gear (28T) (ML-104386)	1
57	SC-040-08	Cap Screw 1/4-20 x 1 Hex Socket Hd	4
58	WL-003-35	Lockwasher 1/4	4
59	00-024207	Gear - Upper Worm Shaft (25T)	1
60	00-012430-00051	Key	1
61	00-024206	Spacer - Worm Gear Shaft	1
62	00-012430-00051	Key	1
63	00-121382	Gear - Lower Worm Shaft (17T)	1
64	BB-007-14	Ball Bearing - MRC #204S	1
65	WL-012-05	Lockwasher N.D. #W-04	1
66	NS-034-05	Lock Nut N.D. #N-04	1

* F18835

* Order 00-437501, 00-438097, 00-437499, 00-437500, 00-012430-00194, & OR-001-04.

NOTES

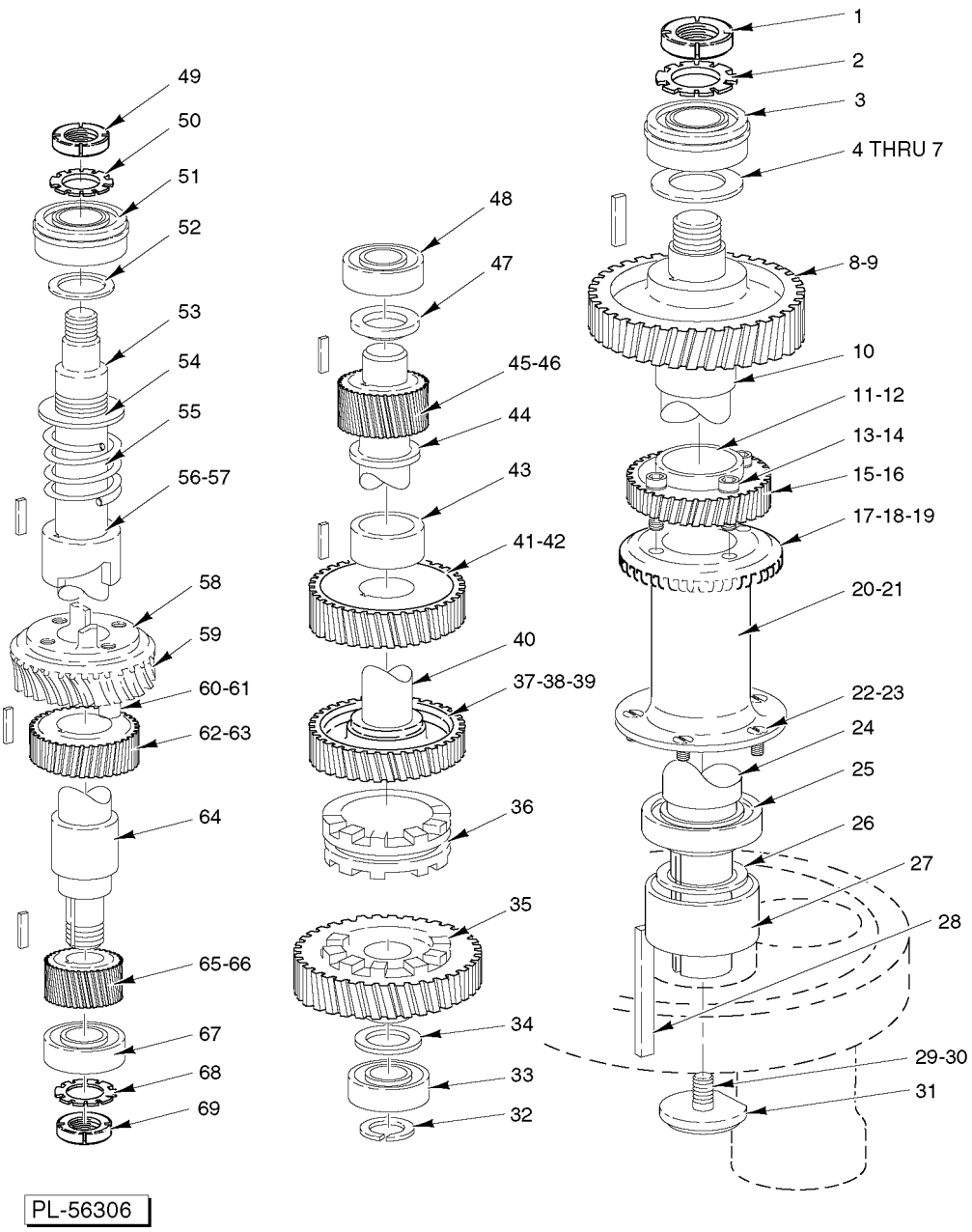

TRANSMISSION UNIT
(2 SPEED)
(CURRENT CONSTRUCTION) F18835

TRANSMISSION UNIT
(2 SPEED)
(CURRENT CONSTRUCTION) F18835

ILLUS. PL-56306	PART NO.	NAME OF PART	AMT.
1	NS-034-07	Lock Nut N.D. #N-06	1
2	WL-012-07	Lockwasher N.D. #W-06	1
3	BB-009-48	Ball Bearin - MRC #5206SBK-FFG	1
4	00-479808	Shim - Planetary Shaft	AR
5	WS-030-91	Washer (0.003 In. Thk.)	AR
6	WS-030-92	Washer (0.005 In. Thk.)	AR
7	WS-030-93	Washer (0.010 In. Thk.)	AR
8	00-109070-00021	Key	1
9	00-438096	Gear - Upper Planetary Shaft (52T)	1
10	00-437501	Spacer - Gear	1
11	00-274780	Spacer - Planetary Shaft	1
12	OR-001-04	Quad O-Ring	1
13	SC-040-15	Cap Screw 5/16-18 x 1 Soc. Fil. Hd	4
14	WL-003-48	Lockwasher 5/16 High Collar	4
15	00-437500	Sleeve Bearing	1
16	00-438097	Gear - Lower Planetary Shaft (33T)	1
17	00-437327-00002	Gear - Spiral Bevel (41T) (Order With Item 18)	1
18	00-061914-00002	Pinion - Bevel (16T) (Order With Item 17)	1
19	00-274780	Spacer - Planetary Shaft	1
20	00-121478-00001	Chimney	1
21	00-067500-00102	O-Ring	1
22	SC-013-79	Mach. Screw 1/4-20 x 1/2 Slotted Flat Hd	5
23	WL-009-08	Lockwasher 1/4 Ctsk. External	5
24	00-437499	Shaft - Planetary	1
25	BB-015-26	Ball Bearing - Fafnir #P9109PP	1
26	00-024543	Washer - Planetary Spacer	1
27	00-060486	Shield - Planetary Oil	1
28	00-012430-00195	Key	1
29	SC-041-66	Cap Screw 3/8-24 x 1-1/4 Hex Hd. (SST)	1
30	WL-006-27	Lockwasher 3/8 Light (SST)	1
31	00-024266-00001	Washer - Planetary	1
32	RR-005-04	Retaining Ring (Spirolox)	1
33	BB-018-33	Ball Bearing - Fafnir #205KFA	1
34	00-024210		1
35	00-024539	Lower Clutch & Lower Gear Assy. (49T)	1
36	00-024213	Clutch - Shifting	1
37	RR-004-13	Retaining Ring (Truarc)	1
38	00-060767	Washer - Clutch Shaft	1
39	00-024538	Lower Clutch & Upper Gear Assy. (41T)	1
40	00-875121	Shaft - Clutch (Used on All P660 Machines Built After 8/16/01)	1
41	00-012430-00058	Key	1
42	00-292187	Lower Gear Assy. (35T)	1
43	00-437846	Spacer	1
44	00-875179	Spacer	1
45	00-438107	Upper Gear Assy. (20T)	1
46	00-109070-00002	Key	1
47	00-024210	Spacer - Clutch Shaft	1
48	BB-009-04	Ball Bearing NSK #5205TNG	1
49	NS-034-05	Lock Nut N.D. #N-04	1
50	WL-012-05	Lockwasher N.D. #W-04	1
51	BB-009-37	Ball Bearing SKF #5204-ZNBR	1
52	RR-005-10	Retaining Ring (Spirolox)	1
53	00-024204	Shaft - Worm Gear	1
54	00-024238	Washer - Shock Absorber	2
55	00-009733	Spring - Worm Shaft	1

TRANSMISSION UNIT
(2 SPEED)
(CURRENT CONSTRUCTION) F18835

ILLUS. PL-56306	PART NO.	NAME OF PART	AMT.
56	00-024546	Key - Compressor to Shaft	1
57	00-061498	Compressor - Shock Absorber	1
58	00-292993	Flange - Shock Absorber Drive	1
59	00-292181	Worm Gear (28T) (ML-104386)	1
60	SC-040-08	Cap Screw 1/4-20 x 1 Hex Socket Hd	4
61	WL-003-35	Lockwasher 1/4	4
62	00-024207	Gear - Upper Worm Shaft (25T)	1
63	00-012430-00051	Key	1
64	00-024206	Spacer - Worm Gear Shaft	1
65	00-012430-00051	Key	1
66	00-121382	Gear - Lower Worm Shaft (17T)	1
67	BB-007-14	Ball Bearing - MRC #204S	1
68	WL-012-05	Lockwasher N.D. #W-04	1
69	NS-034-05	Lock Nut N.D. #N-04	1

NOTES

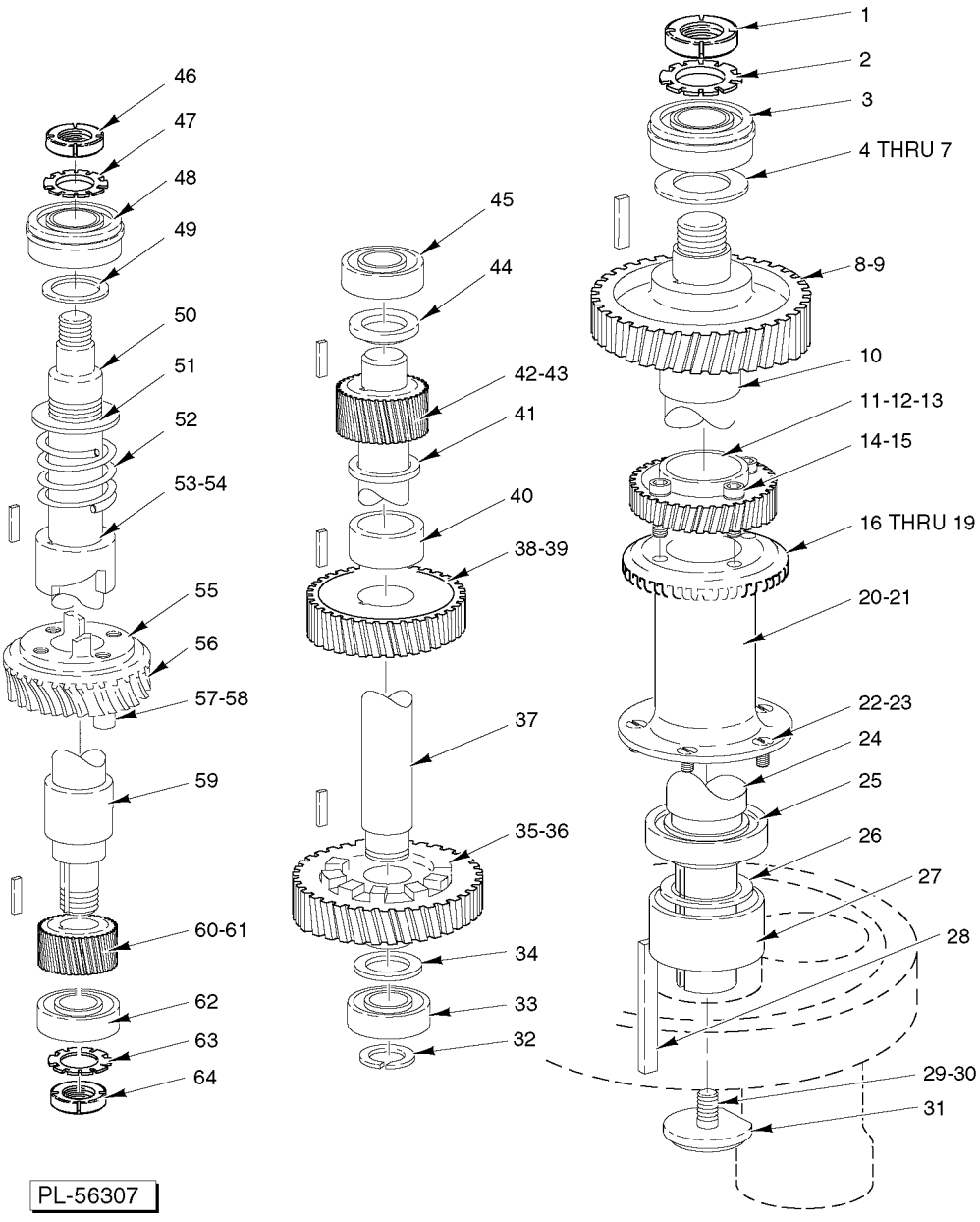

TRANSMISSION UNIT
(1 SPEED)
(SBA) F18835

TRANSMISSION UNIT
(1 SPEED)
(SBA) F18835

ILLUS. PL-56307	PART NO.	NAME OF PART	AMT.
1	NS-034-07	Lock Nut N.D. #N-06	1
2	WL-012-07	Lockwasher N.D. #W-06	1
3	BB-009-48	Ball Bearin MRC #5206SBK-FFG	1
4	00-479808	Shim Planetary Shaft	AR
5	WS-030-91	Washer (0.003 In. Thk.)	AR
6	WS-030-92	Washer (0.005 In. Thk.)	AR
7	WS-030-93	Washer (0.010 In. Thk.)	AR
8	00-109070-00021	Key	1
9	00-437492	Gear - Upper Planetary Shaft (55T)	1
10	00-437501	Spacer - Gear	1
11	00-274780	Spacer - Planetary Shaft	1
12	00-437493	Gear - Lower Planetary Shaft (33T) (Incls. Item 13)	1
13	00-437500	Sleeve - Bearing	1
14	SC-040-15	Cap Screw 5/16-18 x 1-1/4 Hex Socket Hd	4
15	WL-003-48	Lockwasher 5/16 High Collar	4
16	00-437327-00002	Gear - Spiral Bevel (41T) (Order W/Item 17)	1
17	00-061914-00002	Pinion - Bevel (16T) (Order W/Item 16)	1
18	00-274780	Spacer - Planetary Shaft	1
19	OR-001-04	Quad O-Ring	1
20	00-121478-00001	Chimney	1
21	00-067500-00102	O-Ring	1
22	SC-013-79	Mach. Screw 1/4-20 x 1/2 Slotted Flat Hd	5
23	WL-009-08	Lockwasher 1/4 Ctsk. External	5
24	00-437499	Shaft - Planetary	1
25	BB-015-26	Ball Bearing - Fafnir #P9109PP	1
26	00-024543	Washer - Planetary Spacer	1
27	00-060486	Shield - Planetary Oil	1
28	00-012430-00194	Key	1
29	SC-041-66	Cap Screw 3/8-24 x 1-1/4 Hex Hd. (SST)	1
30	WL-006-27	Lockwasher 3/8 Light (SST)	1
31	00-024266-00001	Washer - Planetary	1
32	RR-005-04	Retaining Ring (Spirolox)	1
33	BB-018-33	Ball Bearing - Fafnir #205KFA	1
34	00-024210	Spacer - Clutch Shaft	1
35	00-437509	Gear - Lower Clutch Shaft	1
36	00-012430-00058	Key	1
37	00-437498	Shaft - Clutch	1
38	00-437494	Gear - Drive Attach	1
39	00-012430-00058	Key	1
40	00-437846	Spacer - Clutch Gear	1
41	00-875179	Spacer - Clutch Shaft	1
42	00-437491	Pinion - One Speed	1
43	00-109070-00002	Key	1
44	00-024210	Spacer - Clutch Shaft	1
45	BB-009-04	Ball Bearing NSK #5205TNG	1
46	NS-034-05	Lock Nut N.D. #N-04	1
47	WL-012-05	Lockwasher N.D. #W-04	1
48	BB-009-37	Ball Bearing SKF #5204-ZNBR	1
49	RR-005-10	Retaining Ring (Spirolox)	1
50	00-024204	Shaft - Worm Gear	1
51	00-024238	Washer - Shock Absorber	1
52	00-009733	Spring - Worm Shaft	1
53	00-024546	Key - Compressor to Shaft	1
54	00-061498	Compressor - Shock Absorber	1
55	00-292993	Flange - Shock Absorber Drive	1

TRANSMISSION UNIT
(1 SPEED)
(SBA) F18835

ILLUS. PL-56307	PART NO.	NAME OF PART	AMT.
56	00-437524	Worm Gear (30T)	1
57	SC-040-08	Cap Screw 1/4-20 x 1 Hex Socket Hd	4
58	WL-003-35	Lockwasher 1/4 Helical	4
59	00-437510	Spacer - Worm Gear Shaft	1
60	00-012430-00051	Key	1
61	00-437507	Gear - Worm Shaft (One Speed)	1
62	BB-007-14	Ball Bearing - MRC #204S	1
63	WL-012-05	Lockwasher N.D. #W-04	1
64	NS-034-05	Lock Nut N.D. #N-04	1

NOTES

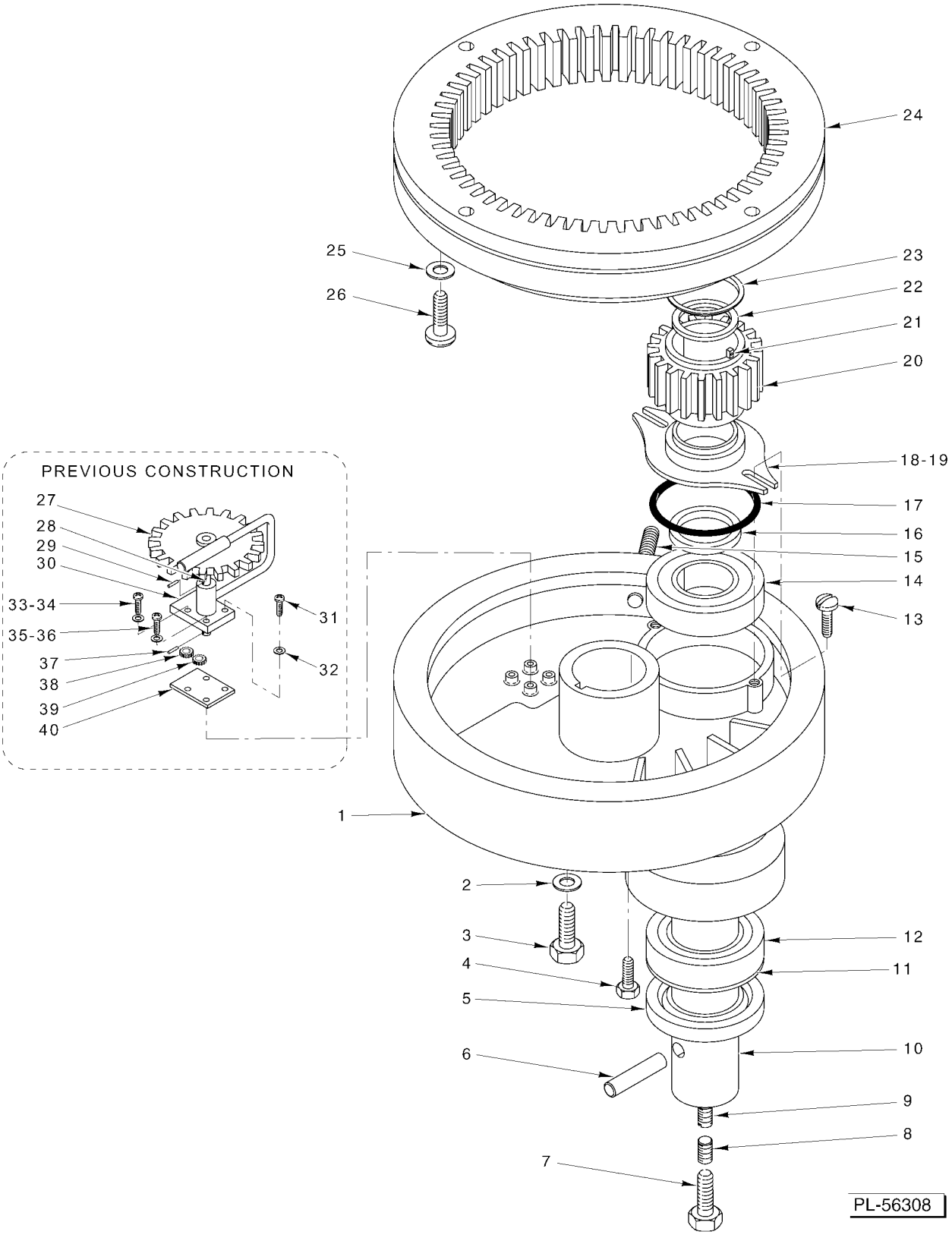

PLANETARY UNIT F18835

PLANETARY UNIT F18835

ILLUS. PL-56308	PART NO.	NAME OF PART	AMT.
1	00-292197	Planetary	1
2	WS-021-21	Washer 0.500 x 0.750 x 0.093 (Nylon)	1
3	SC-041-42	Cap Screw 1/2-20 x 1 Hex Hd. (SST)	1
4	SC-041-26	Cap Screw 3/8-16 x 1/2 Hex Hd. (SST)	2
5	00-292288	Seal - Planetary	1
6	00-111156	Pin - Agitator Shaft	1
7	00-064723	Screw - Agitator Shaft	1
8	SC-047-41	Set Screw 3/8-16 x 3/8 Hex Hdls., Cup Pt	1
9	00-007744	Set Screw Hdls., Cone Pt	1
10	00-064137-00002	Agitator Shaft Assy. (Incls. Items 6 thru 9)	1
11	00-292280	Spacer - Agitator Shaft	1
12	BB-007-01	Ball Bearing - #6208	1
13	SC-009-41	Mach. Screw 1/4-20 x 3/8 Slotted Rd. Hd	2
14	BB-006-36	Ball Bearing - MRC #306-SZZ	1
15	FP-028-38	Plug 3/8 Hex Socket Pipe	1
16	00-060768	Shim - Internal Pinion	AR
17	00-067500-00021	O-Ring	1
18	00-270867	Washer - Special	1
19	00-270866	Oil Baffle - Planetary	1
20	00-024270	Pinion - Internal (18T)	1
21	00-012430-00154	Key 1/4 x 1/4 x 1-3/8	1
22	RR-005-08	Retaining Ring	1
23	00-060071	Cap - Oil Retaining	1
24	00-437692	Gear - Internal (59T)	1
25	WL-019-92	Lockwasher 3/8 High Collar	4
26	SC-040-23	Cap Screw 3/8-16 x 1-1/4 Hex Socket Hd	4
*27	00-060467	Conveying Gear Assy. (18T)	1
*28	00-186273-00001	Shaft - Oil Pump (Service Kit) (Incls. Items 39 & 40)	1
*29	RP-002-08	Roll Pin 5/64 Dia. x 11/16 Lg	1
*30	00-123679	Housing & Tube Assy	1
*31	SC-060-87	Mach. Screw 10-32 x 3/4 Slotted Rd. Hd	1
*32	WL-003-22	Lockwasher #10 Light	1
*33	SC-009-68	Mach. Screw 8-32 x 3/4 Slotted Rd. Hd	1
*34	WL-003-15	Lockwasher #8 Light	1
*35	SC-081-17	Mach. Screw 10-32 x 1 Slotted Rd. Hd. (SST)	2
*36	WL-003-22	Lockwasher #10 Light	2
*37	00-538772	Dowel 3/32 Dia. x 1 1/32 Lg	1
*38	00-290277	Gear - Oil Pump (15T) (Slotted)	1
*39	00-186270	Gear - Oil Pump (15T)	1
*40	00-060443	Plate - Oil Pump Bottom	1
*	00-290230	Planetary Oil Pump (Incls. Items 20, 21, 22, 27, 28, 29 & 30 thru 40)	1

* Used on Serial Numbers Prior to 31-1276314.

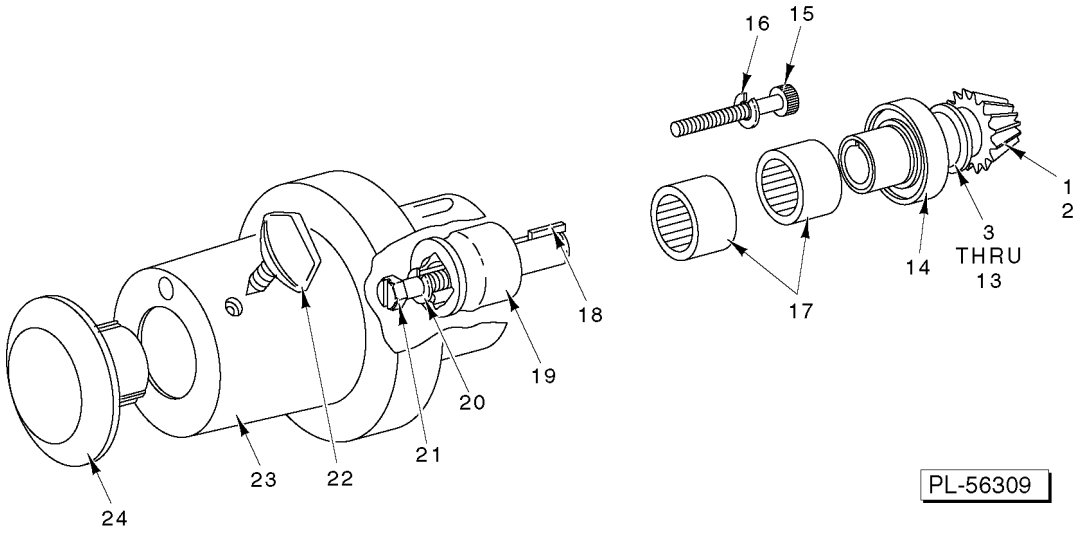

#12 ATTACHMENT HUB UNIT F18835

#12 ATTACHMENT HUB UNIT F18835

ILLUS. PL-56309	PART NO.	NAME OF PART	AMT.
1	00-061914-00002	Pinion - Bevel (16T) (Order With Item 2)	1
2	00-437327-00002	Gear - Spiral Bevel(41T)(Order W/Item 1)	1
3	00-061920-00001	Shim - Bevel Pinion (0.076 In. Thk.)	AR
4	00-061920-00002	Shim - Bevel Pinion (0.079 In. Thk.)	AR
5	00-061920-00003	Shim - Bevel Pinion (0.082 In. Thk.)	AR
6	00-061920-00004	Shim - Bevel Pinion (0.085 In. Thk.)	AR
7	00-061920-00005	Shim - Bevel Pinion (0.088 In. Thk.)	AR
8	00-061920-00006	Shim - Bevel Pinion (0.091 In. Thk.)	AR
9	00-061920-00007	Shim - Bevel Pinion (0.094 In. Thk.)	AR
10	00-061920-00008	Shim - Bevel Pinion (0.097 In. Thk.)	AR
11	00-061920-00009	Shim - Bevel Pinion (0.100 In. Thk.)	AR
12	00-061920-00010	Shim - Bevel Pinion (0.103 In. Thk.)	AR
13	00-061920-00011	Shim - Bevel Pinion (0.106 In. Thk.)	AR
14	BB-013-03	Ball Bearing - Nice #618	1
15	SC-040-50	Cap Screw 5/16-18 x 2-1/4 Hex Socket Hd	4
16	WL-003-44	Lockwasher 5/16 Helical	4
17	BN-002-06	Needle Bearing Torrington B-2212	2
18	00-012430-00042	Key	1
19	00-061506	Sleeve - Square Drive	1
20	WL-003-44	Lockwasher 5/16 Helical	1
21	00-439271	Screw - Special (LH Thread)	1
22	00-108197-00001	Thumb Screw 1-1/4	1
23	00-061894-00001	Hub - Attachment	1
24	00-114824-00001	Plug - Attachment Hub	1

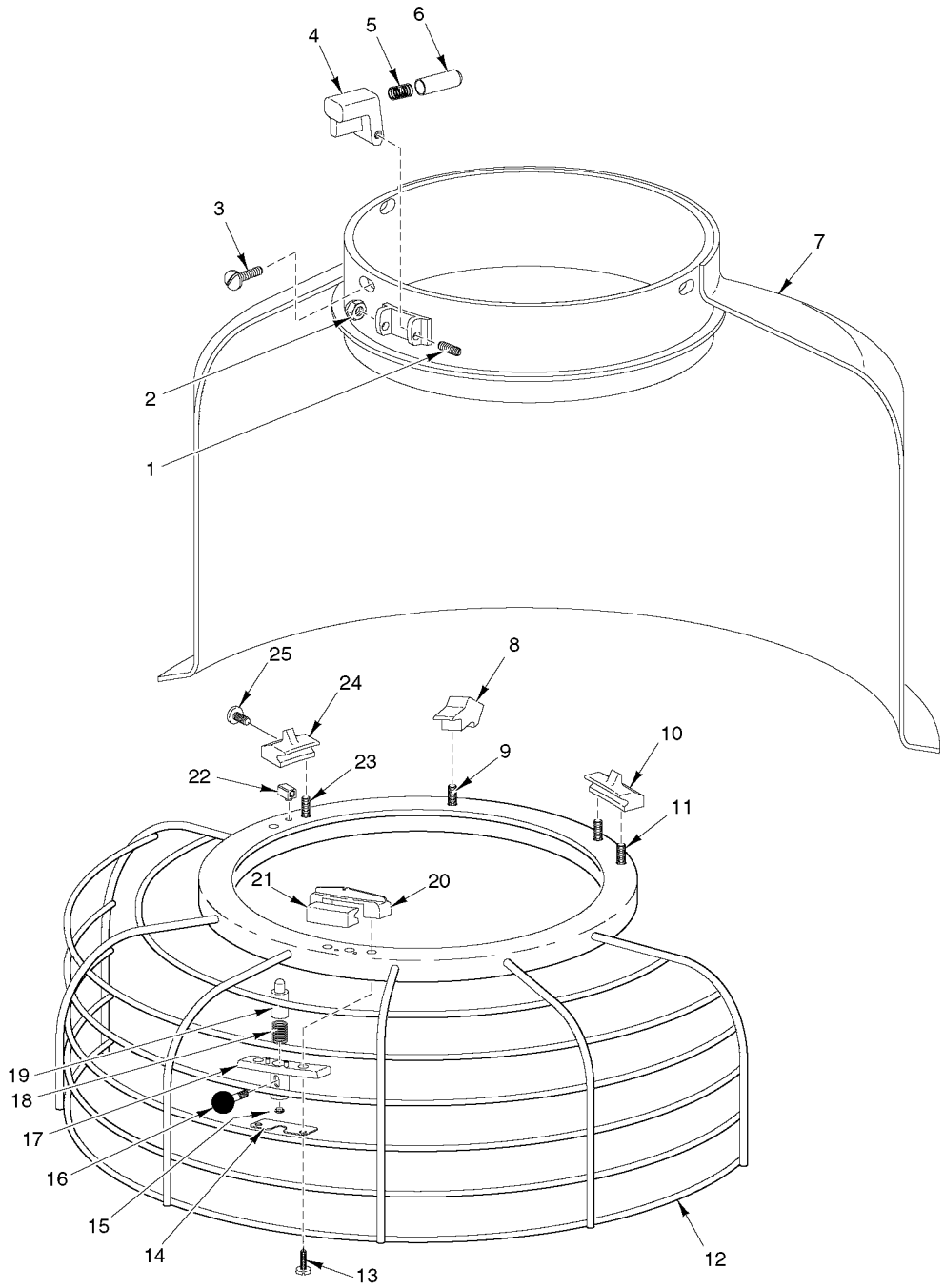

BOWL GUARD UNIT
(PREVIOUS CONSTRUCTION)
(PRIOR TO SERIAL NUMBER 311275_6)

BOWL GUARD UNIT
(PREVIOUS CONSTRUCTION)
(PRIOR TO SERIAL NUMBER 311275_6)*

ILLUS. PL-56310	PART NO.	NAME OF PART	AMT.
1	00-478602	Shoulder Screw Slotted Hd.	1
2	NS-031-50	Nut - Stop Special 6-32 (SST)	1
3	SC-021-37	Mach. Screw 1/4-20 x 3/8 Slotted Rd. Hd. (SST)	3
4	00-479010	Latch - Cage Detent	1
5	00-437446-00001	Spring - Cage Detent	1
6	00-437445	Plunger - Drip Cup	1
7	00-437450	NLA - Obsolete--Splash Guard Assy	1
8	00-437442	Retainer - Magnet	1
9	SC-122-44	Mach. Screw Special 8-32 x 3/8 Slotted Truss Hd. (SST)	1
10	00-437433-00002	Shoe - Fixed	1
11	SC-122-45	Mach. Screw Special 1/4-20 x 3/8 Slotted Truss Hd. (SST)	2
12	00-438160	NLA - Obsolete--Wire Cage Assy	1
13	SC-122-46	Mach. Screw Special 1/4-20 x 3/4 Slotted Truss Hd. (SST)	2
14	00-437691	Stop - Cage	1
15	00-438053	Plug - Plunger Housing	1
16	00-437436	Pin - Plunger	1
17	00-437447	Housing & Pin Assy	1
18	00-437446-00002	Spring - Cage On/Off	1
19	00-437432	Plunger	1
20	00-437437-00002	Saddle - Shoe	1
21	00-437433-00001	Shoe - Saddle	1
22	00-437720	Key - Shoe	1
23	SC-122-45	Mach. Screw Special 1/4-20 x 3/8 Slotted Truss Hd. (SST)	2
24	00-437433-00003	Shoe - Adjustable	1
25	SC-123-07	Mach. Screw Special 8-32 x 1/2 Slotted Truss Hd. (SST)	1

* F18835

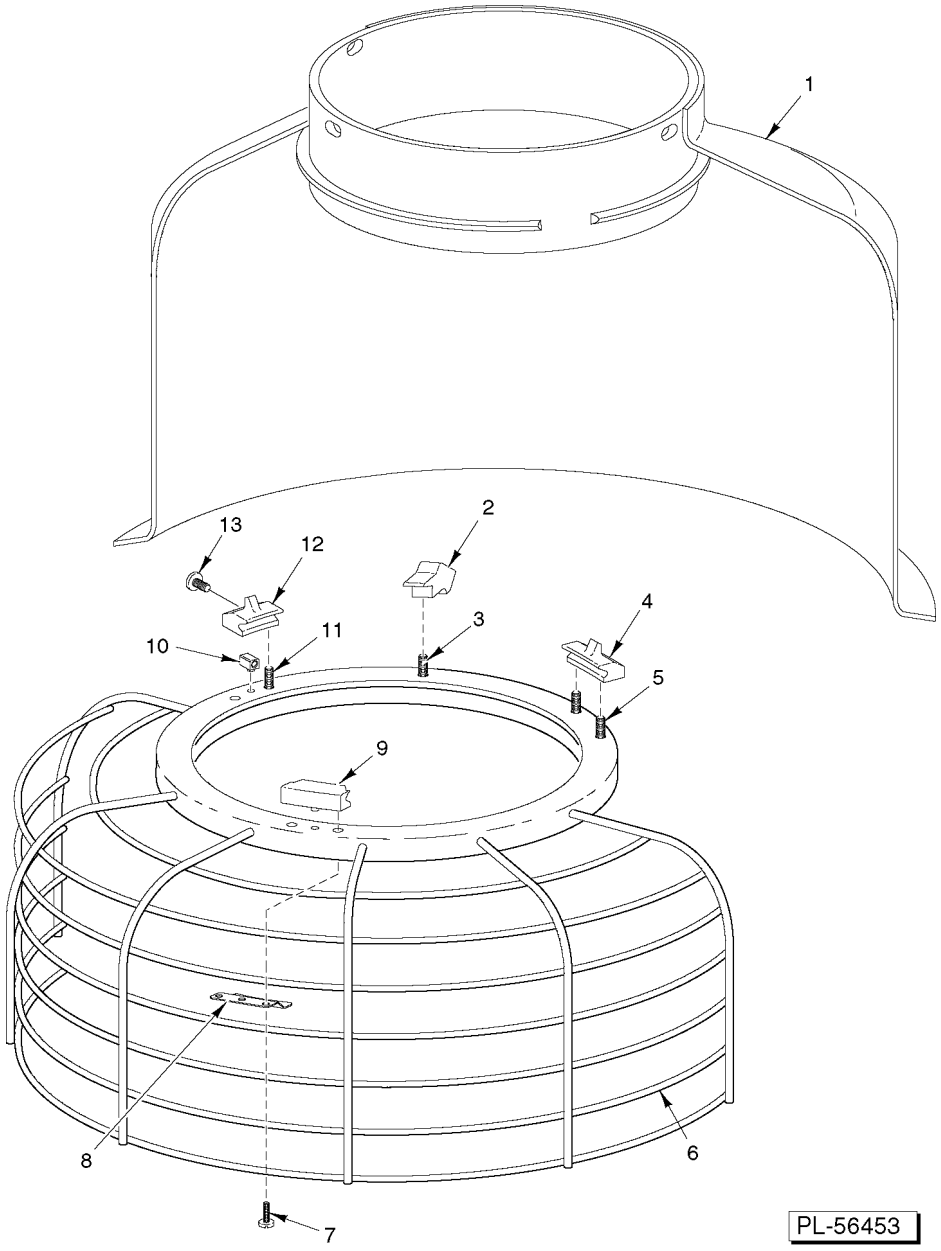

BOWL GUARD UNIT
(CURRENT CONSTRUCTION) F18835

BOWL GUARD UNIT
(CURRENT CONSTRUCTION) F18835

ILLUS. PL-56453	PART NO.	NAME OF PART	AMT.
1	00-874997	Splash Guard Assy	1
2	00-437442	Retainer - Magnet	1
3	SC-122-44	Mach. Screw Special 8-32 x 3/8 Slotted Truss Hd. (SST)	1
4	00-437433-00002	Shoe - Fixed	1
5	SC-122-45	Mach. Screw Special 1/4-20 x 3/8 Slotted Truss Hd. (SST)	2
6	00-874999-00001	Wire Cage Assy. (Incls. Items 2 thru 5 & 7 thru 13)	1
7	SC-122-45	Mach. Screw Special 1/4-20 x 3/4 Slotted Truss Hd. (SST)	2
8	00-874995	Stop - Cage	1
9	00-874126	Shoe - Front	1
10	00-437720	Key - Shoe	1
11	SC-122-45	Mach. Screw Special 1/4-20 x 3/8 Slotted Truss Hd. (SST)	2
12	00-437433-00003	Shoe - Adjustable	1
13	SC-123-07	Mach. Screw Special 8-32 x 1/2 Slotted Truss Hd. (SST)	1

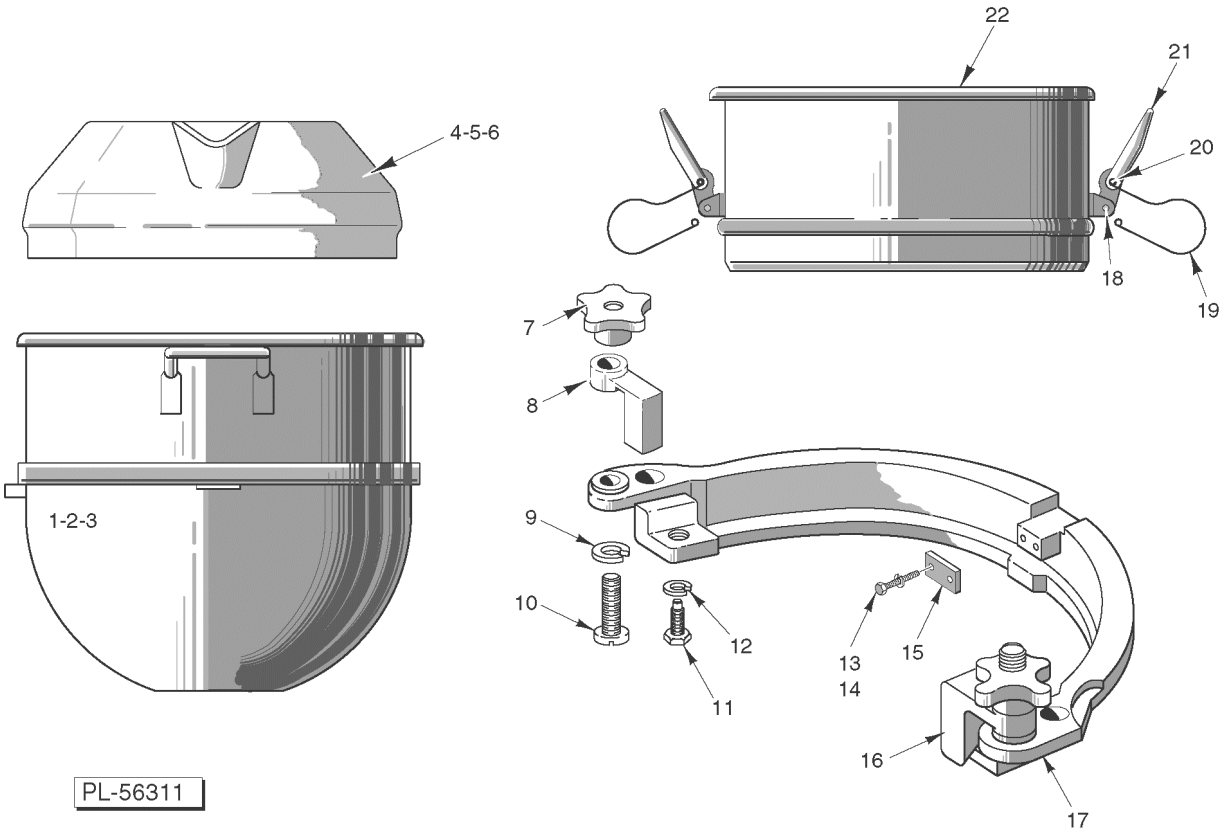

BOWLS AND EQUIPMENT F18835

BOWLS AND EQUIPMENT F18835

ILLUS. PL-56311	PART NO.	NAME OF PART	AMT.
1	00-275688	Bowl - 60 Qt. (SST) (Packaged)	1
2	00-275686	Bowl - 40 Qt. (SST) (Packaged)	1
3	00-295648	Bowl - 30 Qt. (SST) (Packaged)	1
4	00-438082	Splash Cover Assy. - 60 Qt. (Plastic) (Packaged)	1
5	00-438081	Splash Cover Assy. - 40 Qt. (SST) (Packaged)	1
6	00-438080	Splash Cover Assy. - 30 Qt. (SST) (Packaged)	1
7	00-008101-00001	Knob - Clamp Stud (Tinned)	2
8	00-024845-00001	Clamp - Adapter (60-40 Qt. & 60-30 Qt., LH)	1
9	WL-004-11	Lockwasher 1/2 Helical	2
10	00-022196	Bolt - Bowl Lock	2
11	00-024846	Stud - Bowl Locating	2
12	WL-004-17	Lockwasher 5/8 Light	2
13	SC-062-38	Cap Screw 1/4-20 x 5/8 Hex Hd	2
14	WL-003-38	Lockwasher 1/4 Helical	2
15	00-024301	Retainer - Bowl	1
16	00-060222-00001	Clamp - Adapter (60-40 Qt. & 60-30 Qt., RH)	1
17	00-065790-00001	Adaptor Bowl (60-40 Qt. & 60-30 Qt.)	1
18	RP-002-35	Roll Pin 3/16 Dia. x 5/8 Lg. (SST)	2
19	00-437636	Spring - Bowl Clamp	2
20	RP-003-22	Roll Pin 3/16 Dia. x 1 1/8 Lg. (SST)	2
21	00-437586	Handle - Clamp	2
22	00-438104-00004	Bowl Extension Assy. (60 Quart) (Packaged)	1
	00-062087-00001	Adapter Assy. (60-40 Qt. & 60-30 Qt.) (Incls. Items 7 thru 17)	1
	00-118801	Scraper - Bowl	1
	00-102714	Brush	1
	00-438824	Ingredient Chute (Packaged)	1

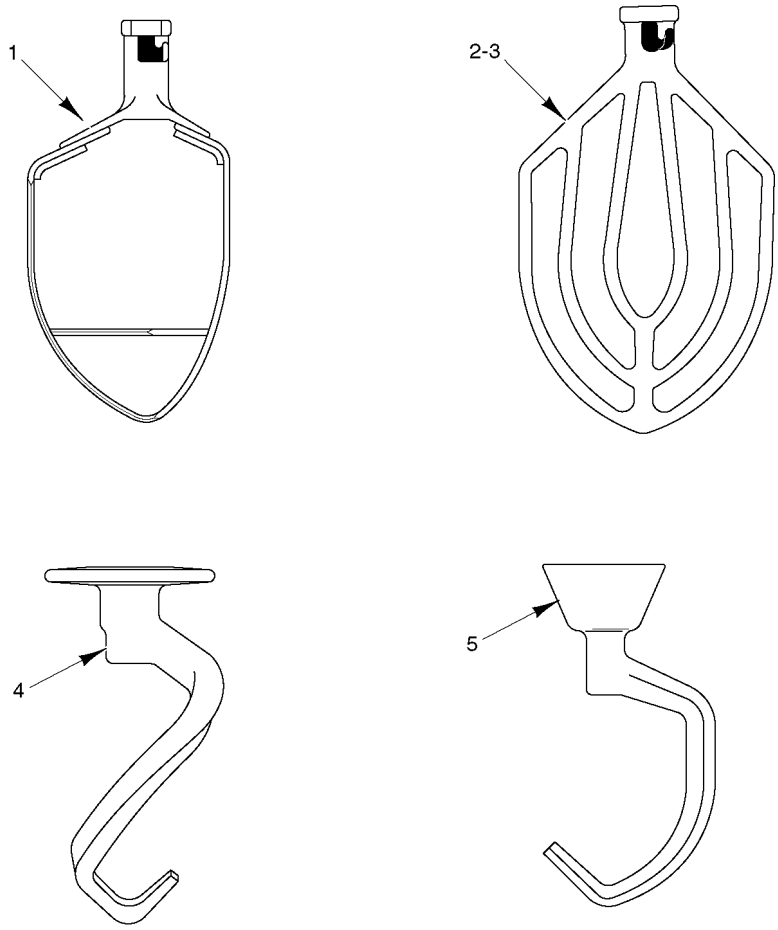

PL-56312

AGITATORS F18835

AGITATORS F18835

ILLUS. PL-56312	PART NO.	NAME OF PART	AMT.
1		"P" Pastry Knife(Pkgd)(60 Qt. 00-275865; 40 Qt. 00-275449; 30 Qt. 00-275972)	1
2		"B" Flat Beater(Alum.)(Pkgd)(60 Qt. 00-275885; 40 Qt. 00-275447; 30 Qt. 00-275809)	1
3		"B" Flat Beater(SST)(Pkgd)(60 Qt. 00-275886; 40 Qt. 00-295033; 30 Qt. 00-295034)	1
4	00-295174	"ED" Dough Arm - Spiral (Packaged) (60 Qt.)	1
5		"E" Dough Arm (Pkgd) (60 Qt. 00-295175; 40 Qt. 00-295176; 30 Qt. 00-275458)	1