HOBART

CATALOG OF REPLACEMENT PARTS

MODELS A200 & AS200 SERIES MIXERS

(INCLUDES MOTOR PARTS)

ML-38906	A200
ML-38907	A200T
ML-38908	A200DT
ML-38909	A200FT
ML-38912	A200M
ML-38717	AS200T

THIS MANUAL REPLACES AND SHOULD BE USED INSTEAD OF FORM 16406 (2-87) & 15335 (4-84)

PRIOR ML'S COVERED IN THIS MANUAL:

ML-19204	ML-19212	ML-19207	ML-19221	ML-38714	ML-38720
ML-19205	ML-19213	ML-19208	ML-19222	ML-38715	ML-38721
ML-19210	ML-19214	ML-19219	ML-19223	ML-38718	ML-38722
ML-19211	ML-19215	ML-19220	ML-19224	ML-38719	ML-38723
					ML-38713
ML-33424	ML-33430	ML-33426	ML-33436		
ML-33425	ML-33431	ML-33427	ML-33437	ML-38716	ML-38726
ML-33428	ML-33432	ML-33434	ML-33438	ML-38724	ML-38727
ML-33429	ML-33433	ML-33435	ML-33439	ML-38725	ML-38728
	ML-38609				ML-38729

A product of HOBART CORPORATION TROY, OHIO 45374

FORM 16968 (9-88)

TABLE OF CONTENTS

Planetary & Attachment Hub Unit 4
Base Unit 6
Pedestal & Bowl Unit 8
Transmission Case & Shifter Unit (A200 Series) 10
Motor Parts (A200 Series) W/Centrifugal Start Switch 12
Motor Parts (A200 Series) W/Electronic Start Switch 14
Transmission Case & Shifter Unit (AS200 Series) 16
Motor Parts (AS200 Series) 18
Switch & Timer Unit (A200 Series) 20
Switch & Timer Unit (A200 Series) 21
Switch & Timer Unit (AS200 Series) 22
Switch & Timer Unit (AS200 Series) 23
Transmission Gear Unit ..... 24 thru 27
Agitators 28

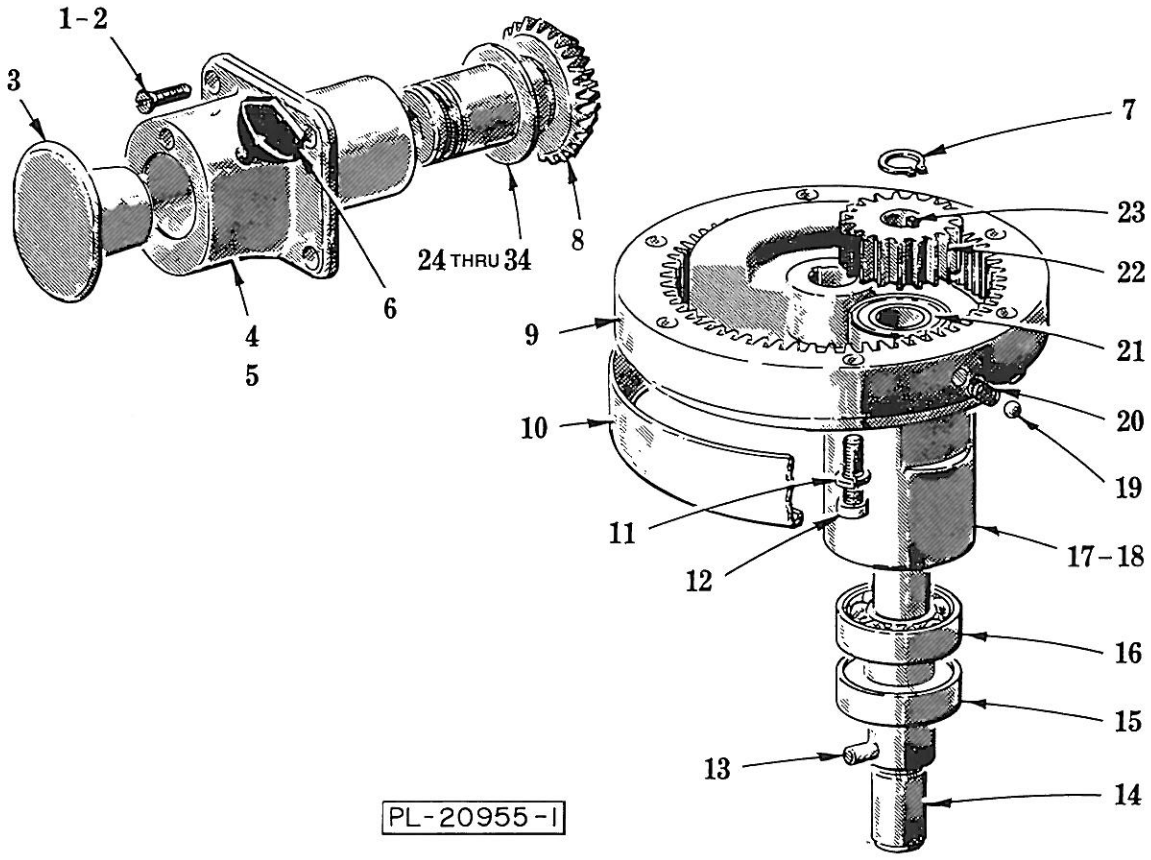

PLANETARY & ATTACHMENT HUB UNIT

PLANETARY & ATTACHMENT HUB UNIT

ILLUS. PL-20955-1	PART NO.	NAME OF PART[33]	AMT.
1	SC-13-71	Mach. Screw 12-24 x ¾ Flat Hd. (Painted)	4
2	SC-14-54	Mach. Screw 12-24 x ¾ Flat Hd. (Deluxe)	4
3	114832-1	Plug - Attachment Hub	1
4	12686-4	Hub - Attachment (Painted) (For A200M Models order item 6 also)	1
5	12686-3	Hub - Attachment (Deluxe)	1
6	108197-1	Thumb Screw Assy	1
7	RR-4-18	Retaining Ring	1
8	24889	Bevel Drive Gear Assy. (35T)	1
9	15216-1	Internal Gear Assy. (63T) (Incls. items 19 & 20)	1
10	15214	Cup - Drip	1
11	WL-3-35	Lock Washer ¼ High Collar	6
12	SC-40-9	Cap Screw ¼-20 x 1¼ Fil. Hd	6
13	65062-1	Pin	1
14	113936	Agitator Shaft Assy. (Incls. item 13)	1
15	23482	Seal - Oil (1" I.D.)	1
16	BB-20-6	Ball Bearing - N.D. #7504	1
17	23166-1	Planetary (Painted)	1
18	23166-4	Planetary (Deluxe)	1
19	BA-2-9	Ball ¼ Dia.	2
20	7094	Spring	2
21	BB-17-12	Ball Bearing N.D. #7503	1
22	15217	Pinion - Beater (19T)	1
23	12430-55	Key	1
24	12746-5	Washer Thrust (.080)	AR
25	12746-6	Washer Thrust (.106)	AR
26	12746-7	Washer Thrust (.092)	AR
27	12746-8	Washer Thrust (.086)	AR
28	12746-9	Washer Thrust (.098)	AR
29	12746-10	Washer Thrust (.112)	AR
30	12746-12	Washer Thrust (.119)	AR
31	12746-13	Washer Thrust (.121)	AR
32	12746-16	Washer Thrust (.129)	AR
33	12746-18	Washer Thrust (.117)	AR
34	12746-19	Washer Thrust (.115)	AR
	102778-1	Planetary Assy. (Painted) (Incls. items 7, 14, 15, 16, 17, 21, 22 & 23)	1
	102778-2	Planetary Assy. (Deluxe) (Incls. items 7, 14, 15, 16, 18, 21, 22 & 23)	1

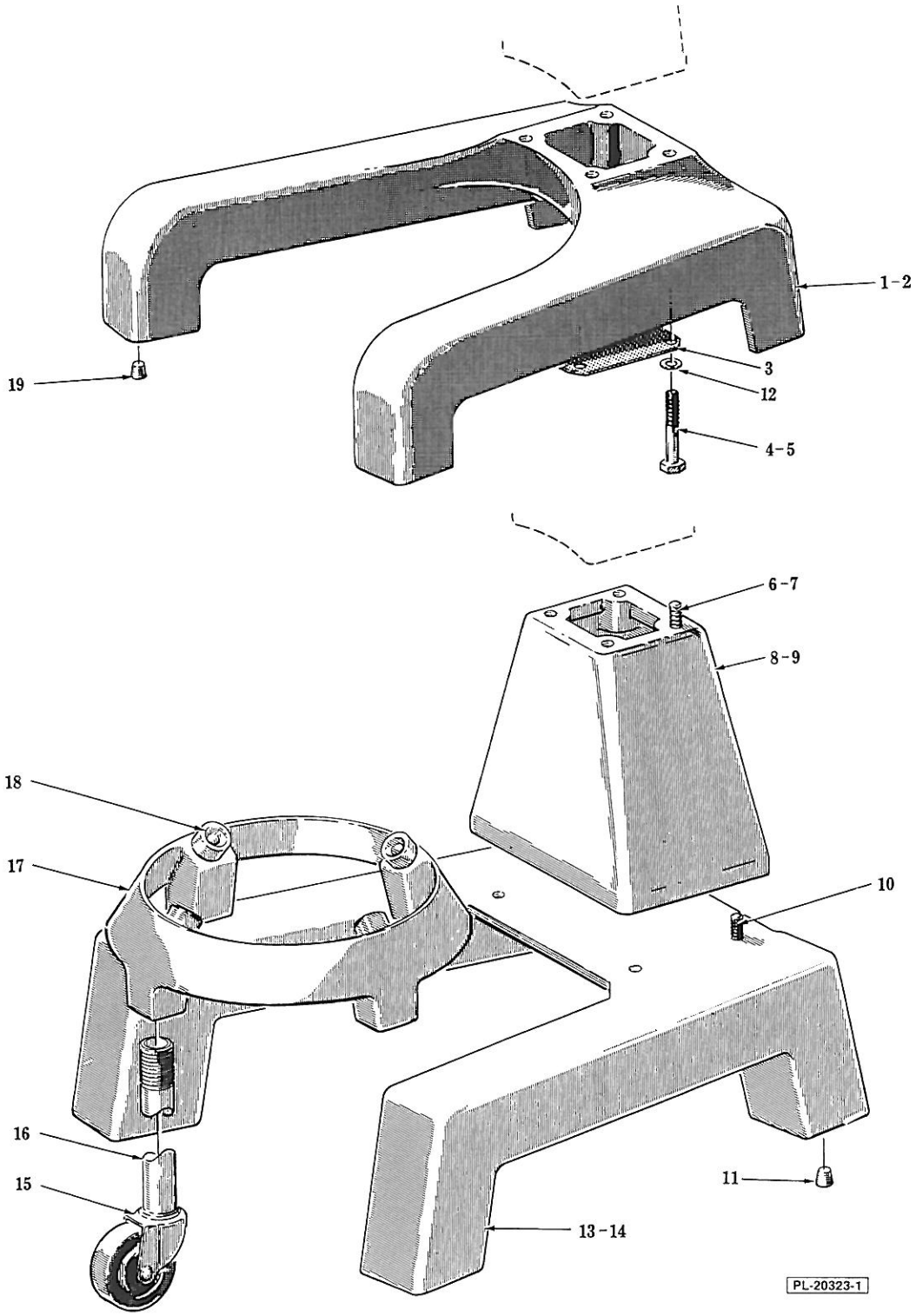

BASE UNIT

BASE UNIT

ILLUS. PL-20323-1	PART NO.	NAME OF PART[21]	AMT.
*1	271915-3	Base (Painted)	1
*2	271915-2	Base (Deluxe)	1
3	108159	Screen - Air	1
*4	SC-97-53	Cap Screw 3/8-16 x 2 1/4 Hex Hd	4
**5	SC-62-42	Cap Screw 3/8-16 x 1 Hex Hd	4
**6	SC-62-27	Cap Screw 3/8-16 x 1 3/4 Hex Hd	4
**7	WS-18-19	Washer	4
**8	74998-4	Block - Riser (Painted)	1
**9	74998-3	Block - Riser (Deluxe)	1
**10	SC-62-22	Cap Screw 3/8-16 x 1 1/4 Hex Hd	4
**11	110717-1	Plug - Base (Plugs for Foot Pad) (Packed 8)	1
12	WS-18-19	Washer	4
**13	291499-3	Base Assy. (Painted)	1
**14	110155	Base Assy. (Deluxe)	1
**15	87668-2	Caster - Bowl Truck	4
**16	70590-2	Leg - Bowl Truck	4
**17	70593-4	Bowl Truck Assy. (Incls. items 15, 16 & 18)	1
**18	18682-1	Bumper	4
*19	110717-1	Plug - Base (Plugs for Foot Pad) (Packed 8)	1
	186982	Pad - Front (Base) (ML-38609, 38713 & 38912 Only)	2
	186983-1	Pad - Rear (R.H.) (ML-38609, 38713 & 38912 Only)	1
	186983-2	Pad - Rear (L.H.) (ML-38609, 38713 & 38912 Only)	1

*Bench Type Model.
**Floor Type Model.

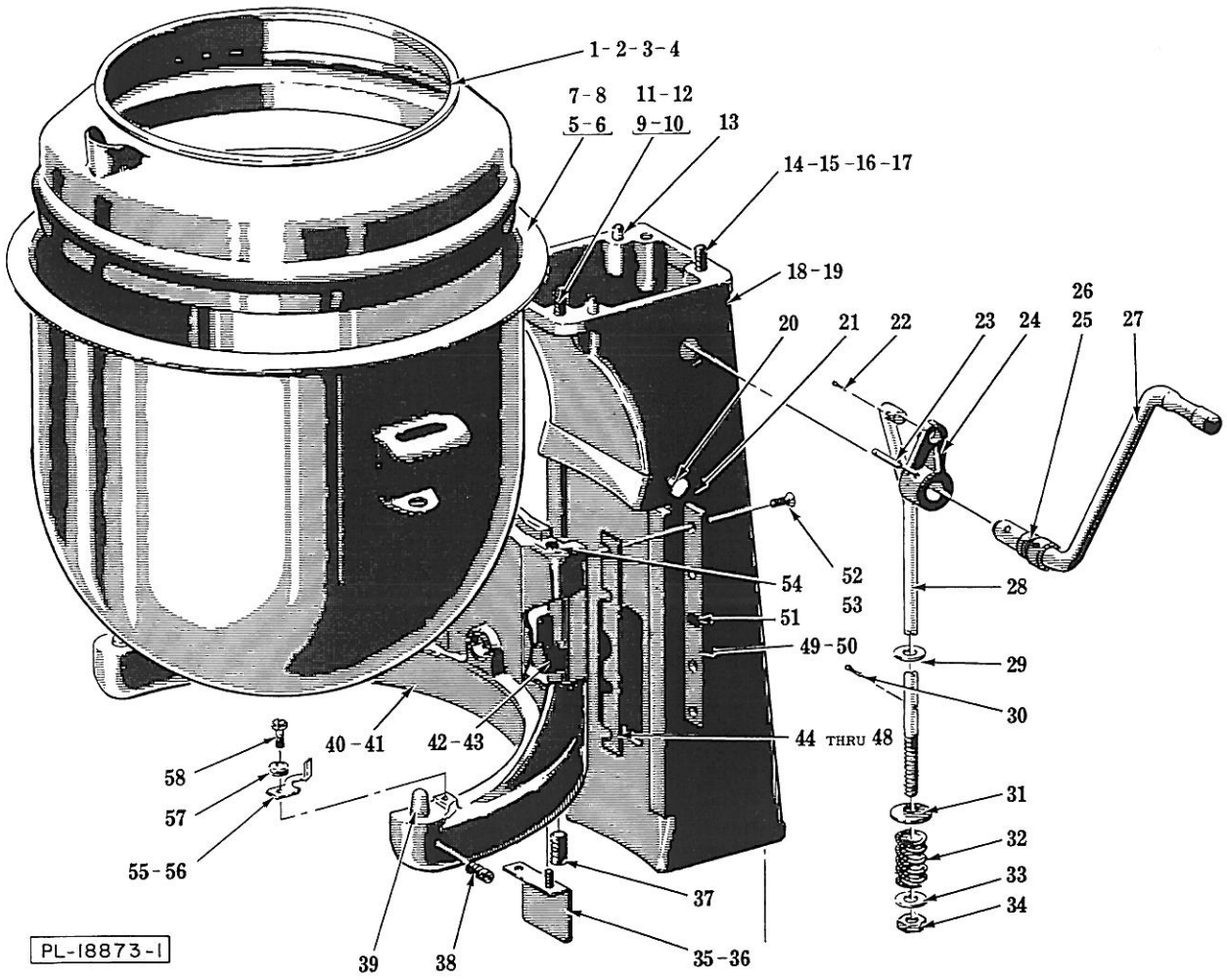

PEDESTAL & BOWL UNIT

PEDESTAL & BOWL UNIT

ILLUS. PL-18873-1	PART NO.	NAME OF PART[21]	AMT.
1	20531-1	Splash Cover & Bowl Extension (20 Qt.) (Tinned)	1
2	20531-2	Splash Cover & Bowl Extension (20 Qt.) (SST)	1
3	86069-1	Cover - Splash (12 Qt.) (Tinned)	1
4	86069-2	Cover - Splash (12 Qt.) (SST)	1
5	62103	Bowl Assy. (20 Qt.) (Tinned)	1
6	62104	Bowl Assy. (20 Qt.) (SST)	1
7	15360	Bowl Assy. (12 Qt.) (Tinned)	1
8	23441	Bowl Assy. (12 Qt.) (SST)	1
9	SC-36-27	Cap Screw 5/16-18 x 1 Hex Hd. (Painted)	2
10	WL-3-43	Lock Washer 5/16 Light (Painted)	2
11	SC-37-85	Cap Screw 5/16-18 x 1 Hex Hd. (Deluxe)	2
12	WL-6-22	Lock Washer 5/16 Light (Deluxe)	2
13	270776	Dowel	2
14	SC-8-92	Mach. Screw 5/16-18 x 1 Rd. Hd. (Painted)	2
15	WL-3-43	Lock Washer 5/16 Light (Painted)	2
16	SC-9-98	Mach. Screw 5/16-18 x 1 Rd. Hd. (Deluxe)	2
17	WL-6-22	Lock Washer 5/16 Light (Deluxe)	2
18	78635-2	Pedestal (Painted)	1
19	78657-2	Pedestal (Deluxe)	1
20	70641-11	Thumb Screw 8-32	2
21	78506	Shield - Upper Splash	1
22	PC-3-55	Cotter Pin 1/8 x 3/4	1
23	PS-4-15	Spirol Pin 1/4 Dia. x 1 1/8 Lg	1
24	114430	Arm - Bowl Lift	1
25	WS-9-11	Washer	AR
26	WS-9-13	Washer (Fiber)	AR
27	114431	Lift Handle Assy	1
28	15215	Rod - Bowl Lift	1
29	WS-6-33	Washer (STL.)	2
30	PC-3-55	Cotter Pin 1/8 x 3/4	1
31	12745	Washer - Special	1
32	12782	Spring	1
33	WS-6-26	Washer	1
34	NS-13-26	Full Nut 3/8-24 Hex Fin	1
35	SC-60-56	Mach. Screw 10-32 x 5/16 Rd. Hd	2
36	78505	Shield - Lower Splash	1
37	121625	Set Screw - Special	1
*38	5014-1	Stud - Bowl Jacket Hook	2
39	6938-2	Pin - Bowl Locating	2
40	24869-1	Bowl Support Assy. (Incls. items 35, 36, 37, 39, 44, 45 & 46) (Painted)	1
41	64439	Bowl Support Assy. (Incls. items 35, 36, 37, 39, 42, 43, 44, 45, 46, 50, 53 & 54) (Deluxe)	1
42	64419	Felt - Bowl Support (Small) (Deluxe)	2
43	64438	Felt - Bowl Support (Large) (Deluxe)	2
44	113016-1	Shim - Bowl Support (.003" Thk.)	AR
45	113016-4	Shim - Bowl Support (.009" Thk.)	AR
46	113016-5	shim - Bowl Support (.015" Thk.)	AR
47	113016-6	Shim - Bowl Support (.005" Thk.)	AR
48	113016-7	Shim - Bowl Support (.0075" Thk.)	AR
49	111213-1	Gib - Bowl Support (Painted)	2
50	107383	Gib Assy. (Incls. item 51) (Deluxe)	2
51	64437	Felt - Gib (Deluxe)	2
52	SC-13-49	Mach. Screw 10-24 x 5/8 Flat Hd. (Painted)	6
53	SC-14-55	Mach. Screw 10-24 x 5/8 Flat Hd. (Deluxe)	8
54	OG-3-27	Oiler (Deluxe)	2
55	291444-1	Clamp - Bowl (L.H.)	1
56	291444-2	Clamp - Bowl (R.H. Shown)	1
57	291263	Washer - Belleville	6
58	110679	Screw - Pivot	2
	111676	Shim (Use between Pedestal & Transmission Case)	AR

*Not available on Mach. ML-38906, 38907, 38908, 38909 or 38912. Order 270824 (20 Quart Kit) or 270825 (12 Quart Kit).

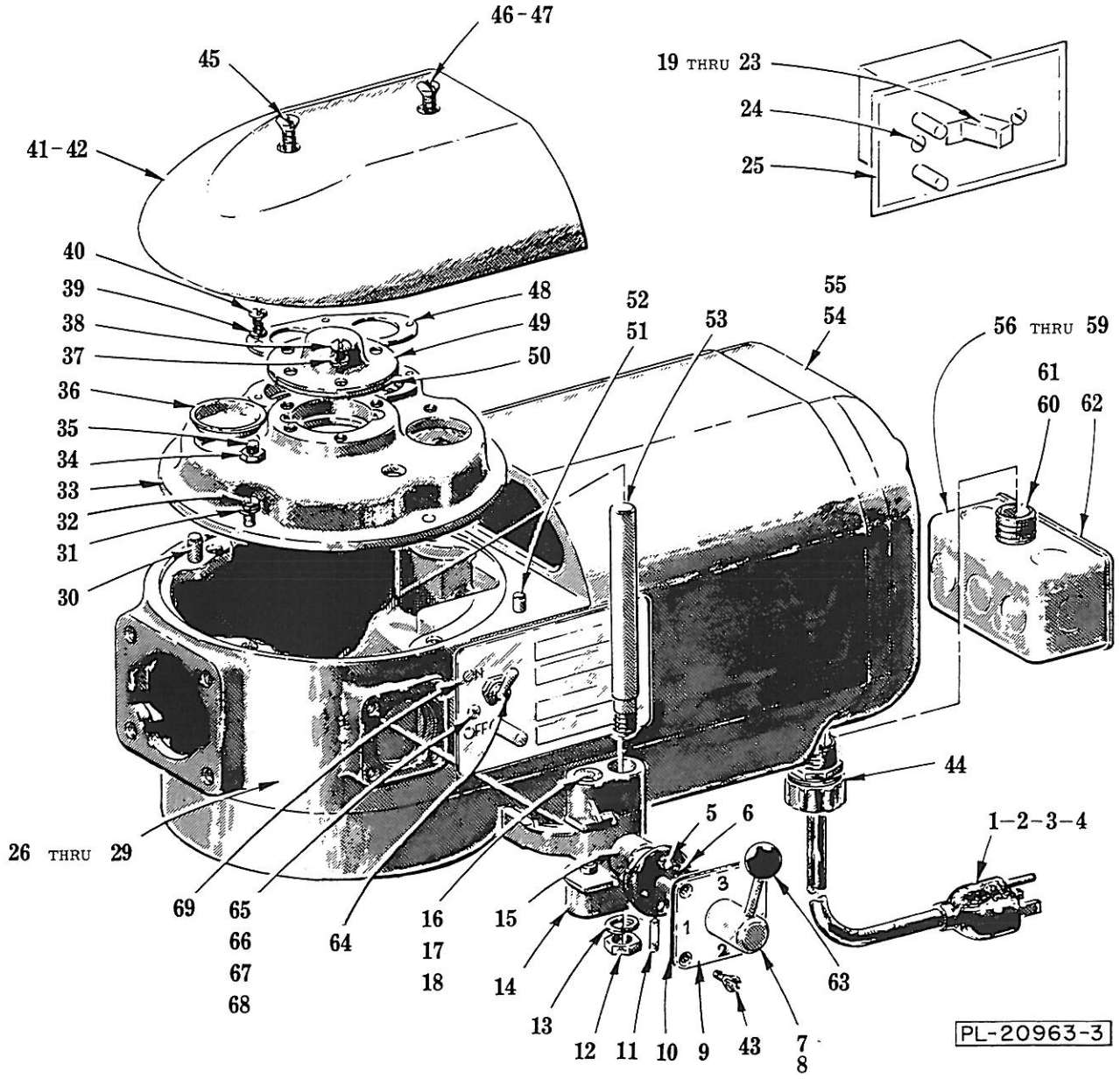

TRANSMISSION CASE & SHIFTER UNIT (A200 SERIES)
(SEE PAGE 16 FOR AS200 SERIES)

ILLUS. PL-20963-3	PART NO.	NAME OF PART[33]	AMT.
1	117542-46	Cord & Plug Assy. (ML-38609, 38713 & 38912 Only)	1
2	117542-7	Cord & Plug Assy. (3 Cond. Under 150 V.) (1 Ph.)	1
3	117542-12	Cord & Plug Assy. (3 Cond. 200-250 V.) (1 Ph.)	1
4	117542-17	Cord Assy. (I.E.C.)	1
5	BA-2-9	Ball ¼ Dia	2
6	111170	Spring - Detent	2
7	123928	Handle - Shifter (Incls. item 63)	1
8	186984	Shaft - Shifter (ML-38609, 38713 & 38912 Only)	1
9	290115-1	Plate - Shifter Index	1

TRANSMISSION CASE & SHIFTER UNIT (A200 SERIES) (Cont.)

ILLUS. PL-20963-3	PART NO.	NAME OF PART[33]	AMT.
10	23946	Gasket - Shifter Index Plate	1
11	PS-3-8	Spirol Pin 1/8 Dia. x 3/4 Lg	1
12	NS-13-22	Full Nut 3/8-16 Hex Fin	1
13	WL-4-2	Lock Washer 3/8 Light	1
14	13160	Yoke - Shifter	1
15	114506	Cam - Gear Shifter	1
16	12733	Plunger - Shifter Yoke	2
17	12734	Spring - Shifter Yoke	2
18	12732	Retainer - Spring (Shifter Yoke)	2
*19	291821	Switch - 1 Ph. (Conversion Kit) (Incls. items 64 & 66 thru 69)	1
20	87711-138-1	Switch (3 Ph.)	1
21	87810-19-1	Switch - Thermal Overload (1 Ph.)	1
22	16504	Insulator - Switch	1
23	74835	Screw - Switch Mounting	2
24	SC-30-6	Mach. Screw 6-32 x 3/8 Oval Hd	2
25	124564-2	Switch Plate Assy	1
26	118039-2	Case - Transmission (Painted) (Incls. items 30 & 51)	1
27	106151-7	Transmission Case Assy. (Deluxe) (Incls. items 30, 32, 33, 42, 45, 46 & 52)	1
28	PL-3-14	Plug 15/16 Dia. Expansion	1
29	PL-3-28	Plug 1 5/16 Dia. Expansion	1
30	11800-116	Dowel	1
31	WL-3-28	Lock Washer 12 Light	4
32	SC-119-7	Cap Screw 12-24 x 3/4 Rd. Hd	4
33	67750	Transmission Shaft Support & Screw Assy. (Incls. items 34 & 35)	1
34	NS-9-36	Mach. Nut 12-24 Hex	1
35	SC-8-56	Mach. Screw 12-24 x 1 1/2 Rd. Hd	1
36	64871	Plug - Friction	2
37	WL-3-28	Lock Washer 12 Light	3
38	SC-8-48	Mach. Screw 12-24 x 1/2 Rd. Hd	3
39	WL-3-22	Lock Washer 10 Light	4
40	SC-7-74	Mach. Screw 10-24 x 3/8 Rd. Hd	4
41	18231-3	Cover - Transmission Case (Painted)	1
42	12691-6	Cover - Transmission Case (Deluxe)	1
43	SC-30-24	Mach. Screw 10-24 x 1/2 Oval Hd	4
44	FE-22-84	Connector - Strain Relief	1
45	SC-16-17	Mach. Screw 12-24 x 1 1/4 Oval Hd. (Deluxe)	1
46	SC-15-57	Mach. Screw 12-24 x 1 1/2 Oval Hd. (Deluxe)	1
47	NS-9-36	Mach. Nut 12-24 Hex	2
48	12708	Retainer - Twin Bearing	1
49	20394-1	Cap - Bearing Retainer	1
50	20395	Retainer - Bearing	1
51	11800-61	Dowel (Painted)	2
52	64303	Dowel (Deluxe)	2
53	12735	Rod - Shifter Guide	1
54	ML-38940	Motor (Give Elec. Spec.) (Painted)	1
55	ML-38941	Motor (Give Elec. Spec.) (Deluxe)	1
56	FE-3-19	Box - Junction (3 Ph.)	1
57	118544-4	Lug - Solderless	1
58	SC-53-1	Mach. Screw 10-24 x 1/4 Truss Hd	1
59	WL-10-6	Lock Washer 10 Ext. Shakeproof	1
60	63849-1	Bushing - Conduit (3 Ph.)	1
61	WL-8-46	Lock Washer 7/8 Int. Shakeproof (3 Ph.)	1
62	FE-4-1	Cover - Junction Box (3 Ph.)	1
63	77401	Knob - Shifter Handle	1
**64	87711-184-1	Switch (1 Ph.)	1
**65	123109	Serrated Screw 6-32 x 3/8 Rd. Hd	2
**66	SC-27-28	Mach. Screw 8-32 x 1/4 Rd. Hd. (Grounding Screw)	1
**67	WL-11-1	Lock Washer 8 Int. Shakeproof	2
**68	NS-10-11	Mach. Nut 8-32 Hex	1
**69	291737	Switch Plate Assy	1
	79999	Shifter Assy. (Incls. items 5, 6, 7, 9, 11 & 15)	1
	79999-2	Shifter Assy. (Incls. items 5, 6, 8, 9, 11 & 15) (ML-38609, 38713 & 38912 Only)	1
	88795	Shifter Yoke Assy. (Incls. items 14, 16, 17 & 18)	1
	SC-29-18	Mach. Screw 8-32 x 1/2 Flat Hd. (Ground Screw for Supply Line) (1 Ph.)	1
	WL-11-1	Lock Washer 8 Int. Shakeproof (Ground Screw) (1 Ph.)	2
	NS-10-11	Mach. Nut 8-32 Hex (Ground Screw) (1 Ph.)	1

*Machine ML's 19204, 19210, 19212 & 19214.

**Machine ML's 33424, 33428, 33430, 33432, 38609, 38713, 38714, 38718, 38720, 38722, 38906, 38907, 38908, 38909 & 38912.

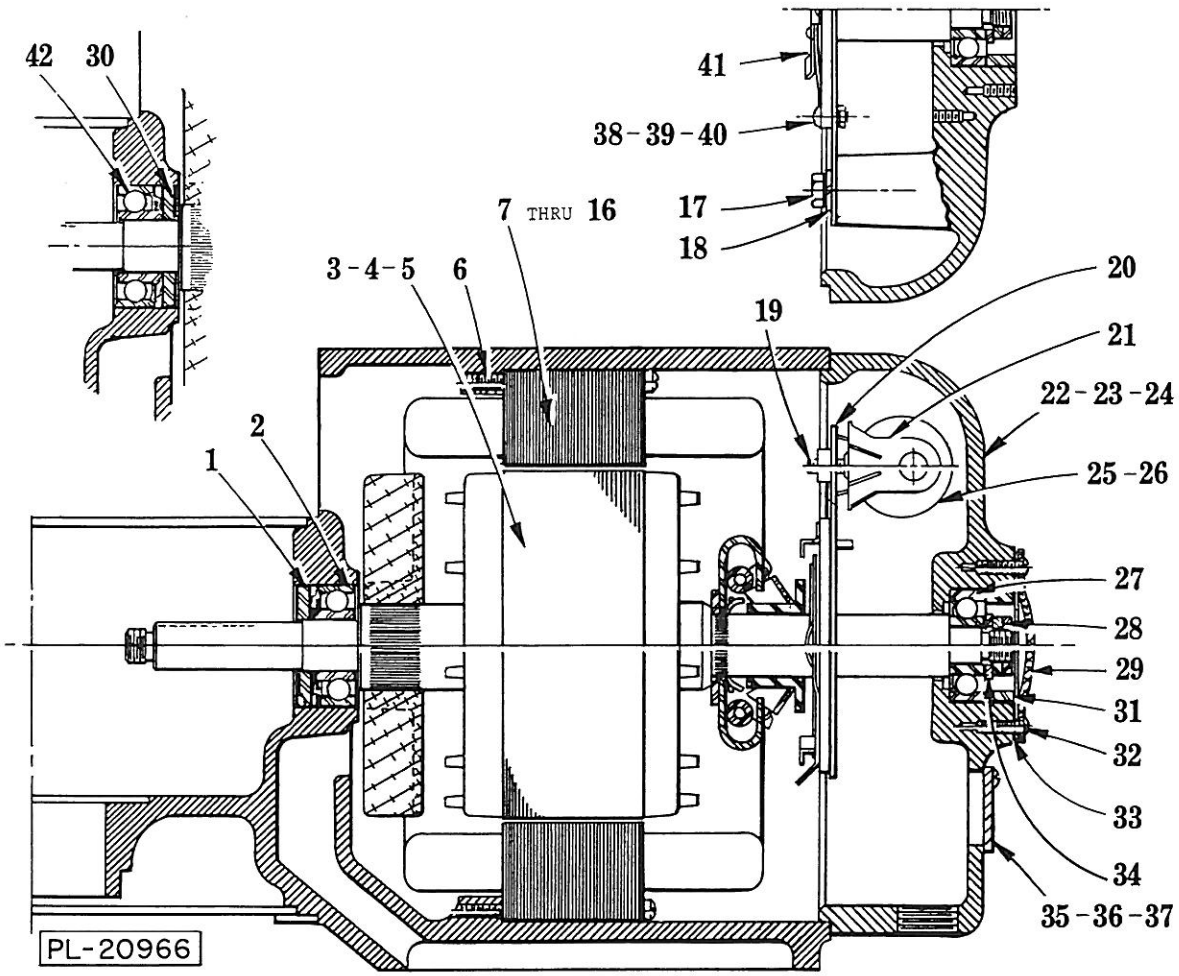

MOTOR PARTS (A200 SERIES)
W/CENTRIFUGAL START SWITCH
(SEE PAGE 18 FOR AS200 SERIES)

MOTOR PARTS (A200 SERIES)
W/CENTRIFUGAL START SWITCH

ILLUS. PL-20966	PART NO.	NAME OF PART[33]	AMT.
1	13174-1	Deflector - Grease	1
2	BB-5-30	Ball Bearing - N.D. #C8503	1
3	22275-257	Rotor Assy. (60 Hz., 1 Ph.)	1
4	22275-258	Rotor Assy. (50 Hz., 1 Ph.)	1
5	15747-305	Rotor Assy. (3 Ph.)	1
6	SC-12-59	Mach. Screw 10-24 x 2¼ Fil. Hd	4
7	65477-65-1	Stator Assy. (115 V., 60 Hz., 1 Ph.)	1
8	65477-65-2	Stator Assy. (200 V., 60 Hz., 1 Ph.)	1
9	65477-65-3	Stator Assy. (230 V., 60 Hz., 1 Ph.)	1
10	65477-65-4	Stator Assy. (115 V., 50 Hz., 1 Ph.)	1
11	65477-65-5	Stator Assy. (220 V., 50 Hz., 1 Ph.)	1
12	65478-13-1	Stator Assy. (200 V., 60 Hz., 3 Ph.)	1
13	65478-13-2	Stator Assy. (230 V., 60 Hz., 3 Ph.)	1
14	65478-13-3	Stator Assy. (460 V., 60 Hz., 3 Ph.)	1
15	65478-13-4	Stator Assy. (220 V., 50 Hz., 3 Ph.)	1
16	65478-13-5	Stator Assy. (380 V., 50 Hz., 3 Ph.)	1
17	SC-62-20	Cap Screw ¼-20 x ⅜ Hex Hd. (1 Ph.)	2
18	WL-3-38	Lock Washer ¼ Medium (1 Ph.)	2
19	SC-14-57	Mach. Screw 10-24 x ½ Flat Hd. (1 Ph.)	2
20	74738	Switch Plate Assy. (1 Ph.)	1
21	66621-1	Bracket - Capacitor (1 Ph.)	1
22	270819-2	Kit - Bearing Bracket (Painted) (Incls. Capacitor Clip & Bearing Bracket)	1
23	270819-1	Kit - Bearing Bracket (Deluxe) (Incls. Capacitor Clip & Bearing Bracket)	1
24	SC-16-31	Mach. Screw 12-24 x 2 Oval Hd	4
25	70487-18	Capacitor (1 Ph.)	1
26	66622-1	End Cap - Capacitor (1 Ph.)	1
27	BB-17-5	Ball Bearing - N.D. #7601	1
28	11430	Nut - Special	2
29	294306-1	Cap - Cover (Deluxe)	1
30	13174-1	Deflector - Grease	1
31	12669	Spacer - Bearing	1
32	SC-10-32	Mach. Screw 8-32 x ⅜ Truss Hd	4
33	24464	Gasket - Cover Cap	1
34	WS-7-9	Washer - Special	1
35	FE-4-3	Cover - Conduit (Painted)	1
36	115231-2	Cover - Conduit (Deluxe)	1
37	SC-9-49	Mach. Screw 6-32 x ⅜ Rd. Hd. (Deluxe)	2
38	SC-9-79	Mach. Screw 6-32 x 5/16 Rd. Hd	2
39	WL-3-9	Lock Washer 6 Medium	2
40	NS-9-7	Mach. Nut 6-32 Hex	2
41	114306	Switch Assy. (Stationary) (1 Ph.)	1
*42	— — —	Ball Bearing	1

*Part 43 has been discontinued, to replace order 294191.

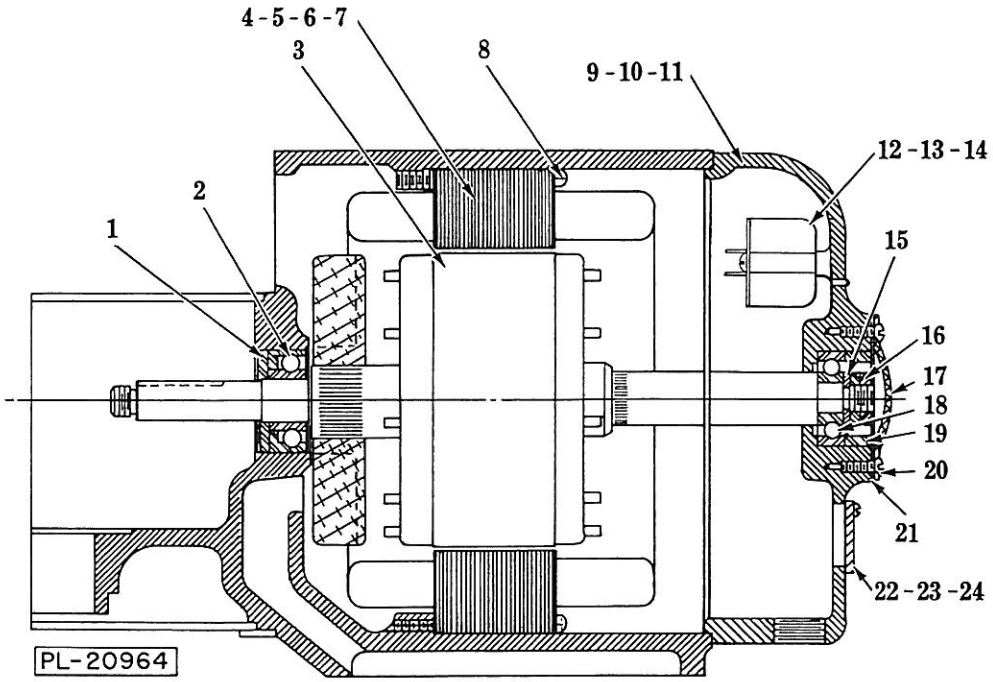

MOTOR PARTS (A200 SERIES)
W/ELECTRONIC START SWITCH
(SEE PAGE 18 FOR AS200 SERIES)

MOTOR PARTS (A200 SERIES)
W/ELECTRONIC START SWITCH

ILLUS. PL-20964	PART NO.	NAME OF PART[33]	AMT.
1	13174-1	Deflector - Grease	1
2	BB-5-30	Ball Bearing - N.D. #C8503	1
3	22275-274	Rotor Assy. (50/60 Hz., 1 Ph.)	1
4	65477-65-1	Stator Assy. (115 V., 60 Hz., 1 Ph.)	1
5	65477-65-8	Stator Assy. (230 V., 60 Hz., 1 Ph.)	1
6	65477-65-4	Stator Assy. (115 V., 50 Hz., 1 Ph.)	1
7	65477-65-9	Stator Assy. (220 V., 50 Hz., 1 Ph.)	1
8	SC-12-59	Mach. Screw 10-24 x 2¼ Fil. Hd	4
9	271883-3	Bracket - Bearing (Painted)	1
10	271883-2	Bracket - Bearing (Deluxe)	1
11	SC-16-31	Mach. Screw 12-24 x 2 Oval Hd	4
12	271612-1	Switch - Electronic Start	1
13	271794-1	Stand-Off - Switch	2
14	SC-9-64	Mach. Screw 6-32 x 1 Rd. Hd	2
15	WS-7-9	Washer - Special	1
16	11430	Nut - Special	2
17	294306-1	Cap - Cover (Deluxe)	1
18	BB-17-5	Ball Bearing - N.D. #7601	1
19	12669	Spacer - Bearing	1
20	SC-10-32	Mach. Screw 8-32 x ⅜ Truss Hd	4
21	24464	Gasket - Cover Cap	1
22	FE-4-3	Cover - Conduit (Painted)	1
23	115231-2	Cover - Conduit (Deluxe)	1
24	SC-9-49	Mach. Screw 6-32 x ⅜ Rd. Hd. (Deluxe)	2
	SC-18-77	Mach. Screw 6-32 x 5/16 (1 Ph.) (Not Shown)	1
	271937	Clip - Capacitor (1 Ph.) (Not Shown)	1
	70487-18	Capacitor (1 Ph.) (Not Shown)	1
	WL-3-9	Lock Washer 6 Medium (1 Ph.) (Not Shown)	1

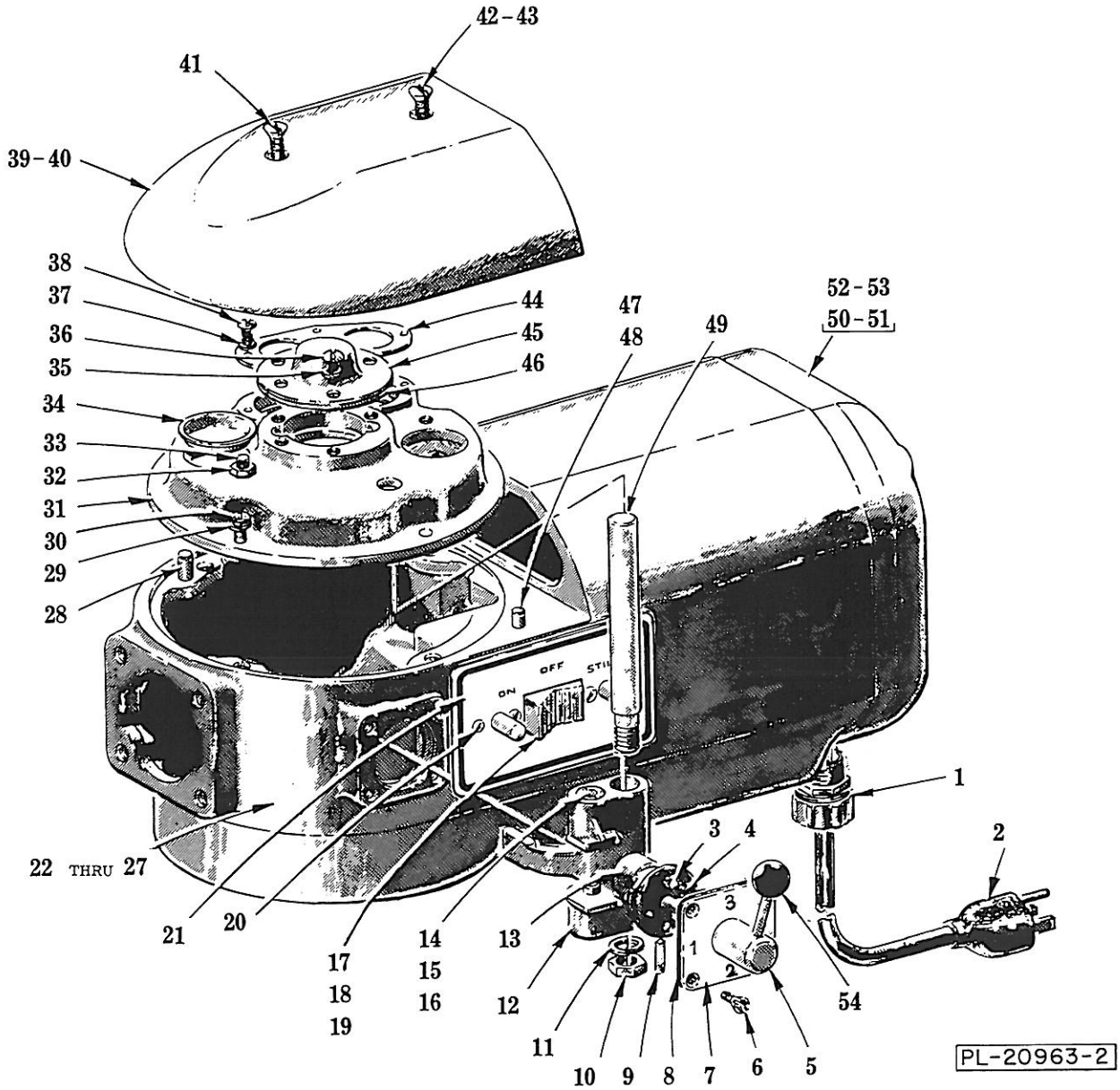

TRANSMISSION CASE & SHIFTER UNIT (AS200 SERIES)

(SEE PAGE 10 FOR A200 SERIES)

TRANSMISSION CASE & SHIFTER UNIT (AS200 SERIES)

ILLUS. PL-20963-2	PART NO.	NAME OF PART[33]	AMT.
1	FE-22-84	Connector - Strain Relief	1
2	117542-5	Cord & Plug (3 Cond. Under 150 V.)	1
3	BA-2-9	Ball ¼ Dia	2
4	111170	Spring - Detent	2
5	123928	Handle - Shifter (Incls. item 54)	1
6	SC-30-24	Mach. Screw 10-24 × ½ Oval Hd	4
7	290115-1	Plate - Shifter Index	1
8	23946	Gasket - Index Plate	1
9	PS-3-8	Spirol Pin ⅛ Dia. × ¾ Lg	1
10	NS-13-22	Full Nut ⅜-16 Hex Fin	1
11	WL-4-2	Lock Washer ⅜ Light	1
12	13160	Yoke - Shifter	1
13	114506	Cam - Gear Shifter	1
14	12733	Plunger - Shifter Yoke	2
15	12734	Spring - Shifter Yoke	2
16	12732	Retainer - Spring	2
17	87711-82-1	Switch - Rockette (D.P.D.T.)	1
18	16504	Insulator - Switch	1
19	SC-15-8	Mach. Screw 6-32 × ¼ Oval Hd	2
20	123109	Mach. Screw 6-32 × ⅜ Truss Hd. "Taptite"	2
21	124568	Switch Plate Assy	1
22	118039-2	Transmission Case (Painted) (Incls. items 28 & 47)	1
23	106993-3	Transmission Case (Timed) (Painted) (Incls. items 28 & 47)	1
24	106151-7	Transmission Case Assy. (Deluxe) (Incls. items 28, 30, 31, 40, 41, 42 & 48)	1
25	106151-8	Transmission Case Assy. (Timed) (Deluxe) (Incls. items 28, 30, 31, 40, 41, 42 & 48)	1
26	PL-3-14	Plug 15/16 Dia. Expansion	1
27	PL-3-28	Plug 1 5/16 Dia. Expansion	1
28	11800-116	Dowel	1
29	WL-3-28	Lock Washer 12 Light	4
30	SC-119-7	Cap Screw 12-24 × ¾ Rd. Hd	4
31	67750	Transmission Shaft Support & Screw Assy. (Incls. items 32 & 33)	1
32	NS-9-36	Mach. Nut 12-24 Hex	1
33	SC-8-56	Mach. Screw 12-24 × 1½ Rd. Hd	1
34	64871	Plug - Friction	2
35	WL-3-28	Lock Washer 12 Light	3
36	SC-8-48	Mach. Screw 12-24 × ½ Rd. Hd	3
37	WL-3-22	Lock Washer 10 Light	4
38	SC-7-74	Mach. Screw 10-24 × ⅜ Rd. Hd	4
39	18231-3	Cover - Transmission Case (Painted)	1
40	12691-6	Cover - Transmission Case (Deluxe)	1
41	SC-16-17	Mach. Screw 12-24 × 1¼ Oval Hd. (Deluxe)	1
42	SC-15-57	Mach. Screw 12-24 × 1½ Oval Hd. (Deluxe)	1
43	NS-9-36	Mach. Nut 12-24 Hex	2
44	12708	Retainer - Twin Bearing	1
45	20394-1	Cap - Bearing Retainer	1
46	20395	Retainer - Bearing	1
47	11800-61	Dowel (Painted)	2
48	64303	Pin - Cover (Deluxe)	2
49	12735	Rod - Shifter Guide	1
50	ML-16350	Motor (Non-Timed) (Painted) (Give Elec. Spec.)	1
51	ML-16351	Motor (Non-Timed) (Deluxe) (Give Elec. Spec.)	1
52	ML-17286	Motor (Timed) (Painted) (Give Elec. Spec.)	1
53	ML-17287	Motor (Timed) (Deluxe) (Give Elec. Spec.)	1
54	77401	Knob - Shifter Handle	1
	79999	Shifter Assy. (Incls. items 3, 4, 5, 7, 9 & 13)	1
	88795	Shifter Yoke Assy. (Incls. items 12, 14, 15 & 16)	1

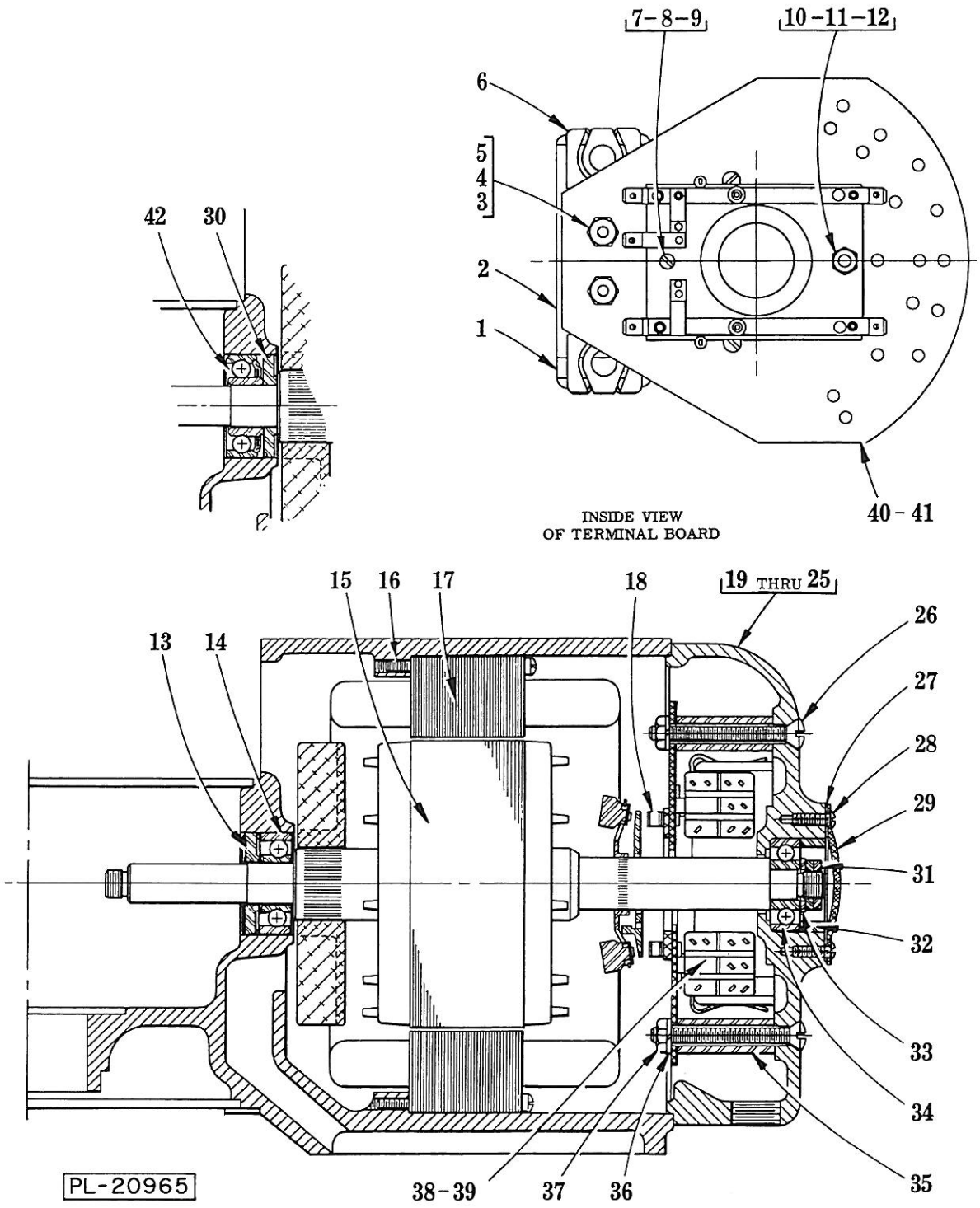

MOTOR PARTS (AS200 SERIES)
(SEE PAGES 12 & 14 FOR A200 SERIES)

MOTOR PARTS (AS200 SERIES)

ILLUS. PL-20965	PART NO.	NAME OF PART[33]	AMT.
1	66622-1	Cap - Capacitor	1
2	70487-18	Capacitor	1
3	SC-14-57	Mach. Screw 10-24 x ½ Flat Hd	2
4	WL-4-40	Lock Washer 10 Medium	2
5	NS-9-22	Mach. Nut 10-24 Hex	2
6	66621-1	Bracket - Capacitor	1
7	SC-9-69	Mach. Screw 6-32 x ½ Rd. Hd	1
8	WL-3-9	Lock Washer 6 Medium	1
9	NS-9-7	Mach. Nut 6-32 Hex	1
10	294714	Stud - Terminal Board	1
11	WL-3-9	Lock Washer 6 Medium	1
12	NS-9-7	Mach. Nut 6-32 Hex	2
13	13174-1	Deflector - Grease	1
14	BB-5-30	Ball Bearing - N.D. #C8503	1
15	22275-259	Rotor Assy	1
16	SC-12-59	Mach. Screw 10-24 x 2¼ Fil. Hd	4
17	65477-71-1	Stator Assy	1
18	294722	Switch - Starting (Stationary Part)	1
19	101595-5	Bracket - Bearing (Painted)	1
20	106152-2	Bracket - Bearing (Deluxe) (Incls. item 22)	1
21	23550-4	Cover - Inspection (Painted)	1
22	23550-3	Cover - Inspection (Deluxe)	1
23	SC-15-44	Mach. Screw 10-24 x 1¼ Oval Hd	4
24	SC-11-64	Mach. Screw 12-24 x 1 Fil. Hd	4
25	SC-27-28	Mach. Screw 8-32 x ¼ Rd. Hd. (Ground Cord & Plug)	1
26	SC-16-3	Mach. Screw ¼-20 x 2⅜ Oval Hd	2
27	24464	Gasket - Cover Cap	1
28	SC-10-32	Mach. Screw 8-32 x ⅜ Truss Hd	4
29	294306-1	Cap - Cover (Deluxe)	1
30	13174-1	Deflector - Grease	1
31	11430	Nut - Special	2
32	12669	Spacer - Bearing	1
33	WS-7-9	Washer	1
34	BB-17-5	Ball Bearing - N.D. #7601	1
35	77781	Post - Switch Retaining Ring	2
36	WL-3-38	Lock Washer ¼ Medium	2
37	NS-13-2	Full Nut ¼-20 Hex Fin	2
38	87714-4-3	Relay	2
39	SC-14-51	Mach. Screw 6-32 x ⅜ Flat Hd	2
40	77807-1	Terminal Board Assy. (Non-Timed) (Incls. items 1 thru 12, 18, 38, 39 & Wire Harness)	1
41	77807-5	Terminal Board Assy. (Timed) (Incls. items 1 thru 12, 18, 38, 39 & Wire Harness)	1
*42	— — —	Ball Bearing	1
	WS-28-1	Washer (Not Shown) (Use with items 7 & 10)	2
	77815	Wire Harness (Time)	1
	294661-1	Wire Harness (Non-Timed)	1

*Part 42 has been discontinued, to replace order 294191.

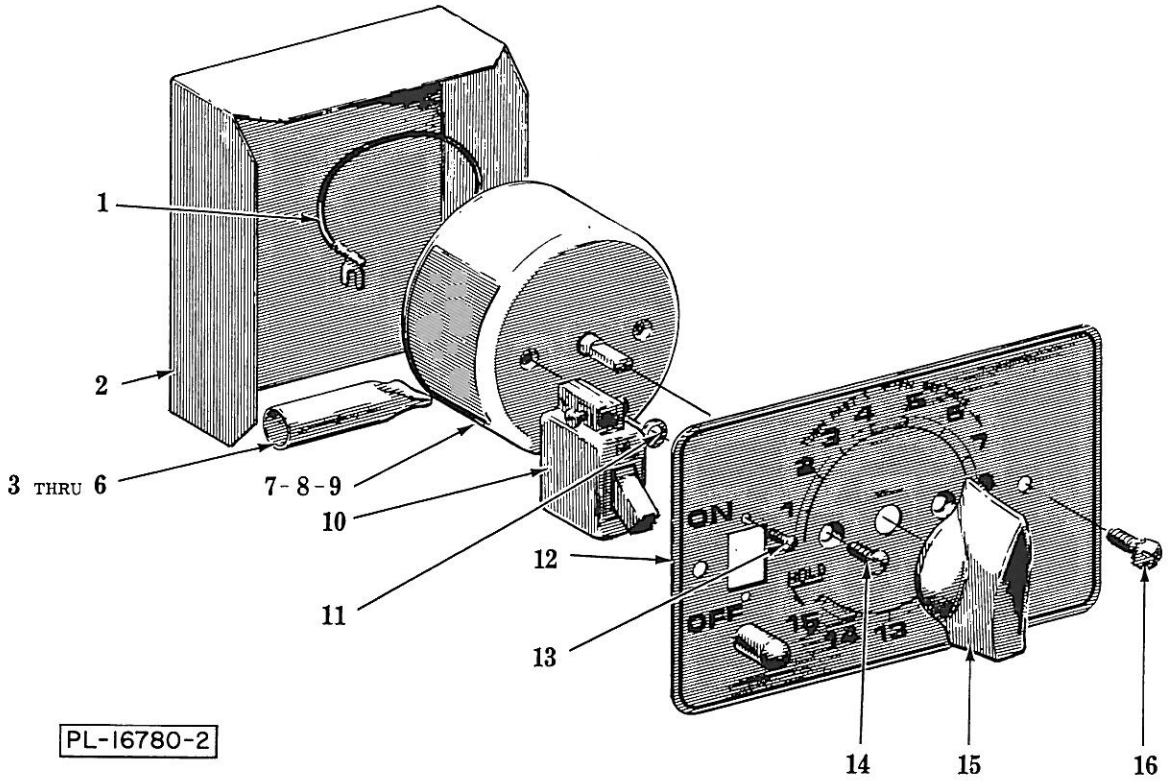

SWITCH & TIMER UNIT (A200 SERIES)
(MACHINE ML'S, 19205, 19211, 19213 & 19215)

ILLUS. PL-16780-2	PART NO.	NAME OF PART[21]	AMT.
1	87532-9	Lead (Timer to Switch)	1
2	70782	Insulator - Switch	1
3	61285-1	Boot - Insulating (Cord & Plug)	1
4	SC-27-28	Mach. Screw 8-32 × ¼ Rd. Hd	1
5	WL-10-1	Lock Washer 8 Ext. Shakeproof	1
6	NS-10-11	Mach. Nut 8-32 Hex	1
7	*	Timer & Knob Assy	1
8	SC-19-36	Mach. Screw 6-32 × ¼ Bind Hd	2
9	WL-10-22	Lock Washer 6 Ext. Shakeproof	2
10	*	Switch (Incls. item 13)	1
11	WS-2-18	Washer (Between Timer & Plate)	2
12	*	Switch Plate Assy	1
13	SC-9-87	Mach. Screw 3-48 × ¼ Rd. Hd	2
14	SC-13-7	Mach. Screw 5-40 × ¼ Flat Hd	2
15	114703	Knob - Pointer	1
16	123109	Serrated Screw 6-32 × ⅜ Rd. Hd	2

*Items 7 & 12 no longer available, order appropriate Service Kit to convert to new style (see page 21).

291822-1 115 V., 60 Hz.
291822-2 230 V., 60 Hz.
291822-3 115 V., 50 Hz.
291822-4 220 V., 50 Hz.

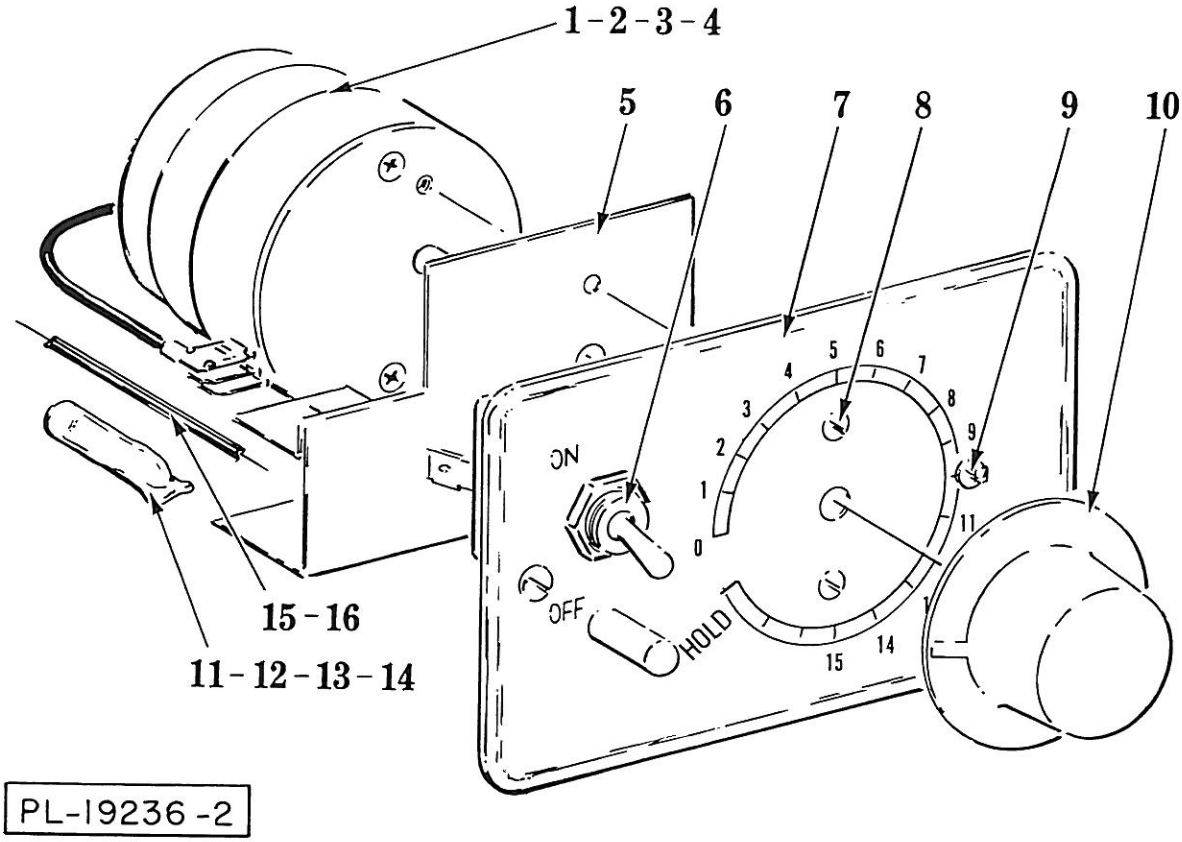

PL-19236-2

SWITCH & TIMER UNIT (A200 SERIES)
(MACH. ML'S 33425, 33429, 33431, 33433, 38715, 38719, 38721, 38723, 38907, 38908 & 38909)

ILLUS. PL-19236-2	PART NO.	NAME OF PART[21]	AMT.
1	294650-4-5	Timer Assy. (115 V., 60 Hz.)	1
2	294650-4-6	Timer Assy. (230 V., 60 Hz.)	1
3	294650-4-7	Timer Assy. (115 V., 50 Hz.)	1
4	294650-4-8	Timer Assy. (220 V., 50 Hz.)	1
5	291746	Insulator	1
6	87711-184-1	Switch - Toggle	1
7	291739	Plate - Assy	1
8	SC-13-7	Mach. Screw 5-40 x ¼ Flat Hd	2
9	123109	Serrated Screw 6-32 x ⅜ Rd. Hd	2
10	291748	Knob	1
11	61285-1	Boot - Insulated (Cord & Plug)	1
12	SC-27-28	Mach. Screw 8-32 x ¼ Rd. Hd	1
13	WL-11-1	Lock Washer 8 Int. Shakeproof	1
14	NS-10-11	Mach. Nut 8-32 Hex	1
15	87532-90	Lead (Timer to Switch)	1
16	87532-97	Lead (Timer to Splice)	1
	291659-1	Switch & Plate Assy. (115 V., 60 Hz.) (Incls. items 1, 5, 6, 7, 8 & 10)	1
	291659-2	Switch & Plate Assy. (230 V., 60 Hz.) (Incls. items 2, 5, 6, 7, 8 & 10)	1
	291659-3	Switch & Plate Assy. (115 V., 50 Hz.) (Incls. items 3, 5, 6, 7, 8 & 10)	1
	291659-4	Switch & Plate Assy. (220 V., 50 Hz.) (Incls. items 4 thru 8 & 10)	1

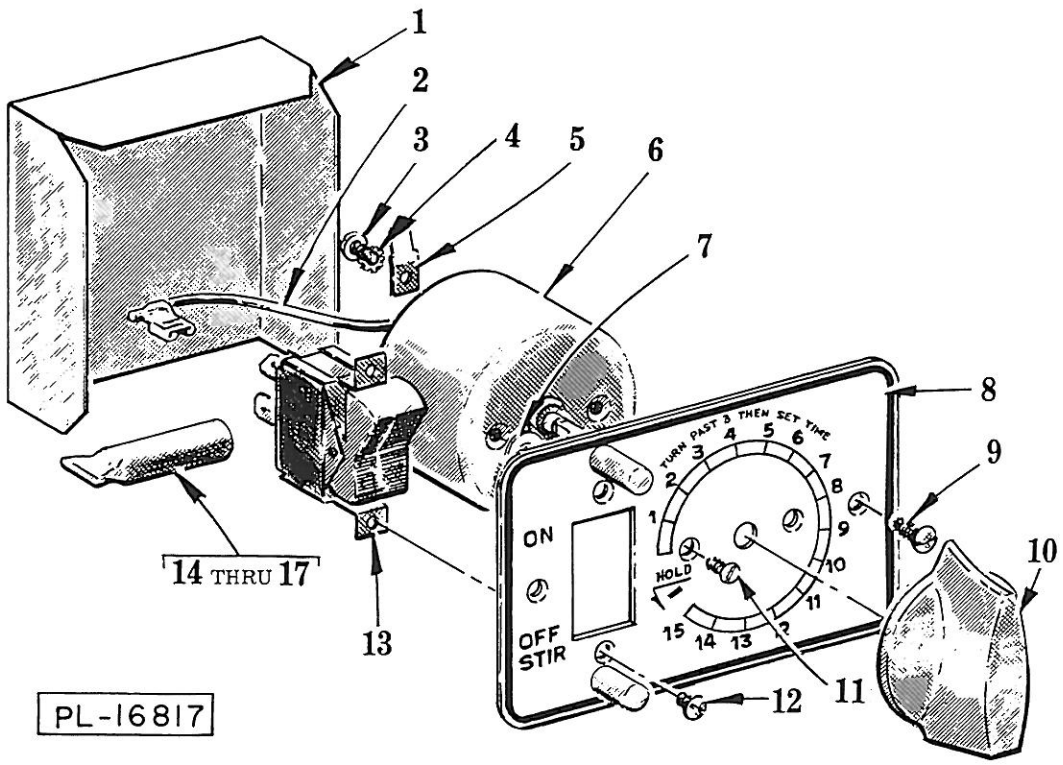

SWITCH & TIMER UNIT (AS200)
(MACHINE ML'S, 19208, 19220, 19222 & 19224)

ILLUS. PL-16817	PART NO.	NAME OF PART[21]	AMT.
1	70782	Insulator - Switch	1
2	87532-22	Lead (Timer to Switch)	1
3	SC-19-36	Mach. Screw 6-32 x ¼ Bind Hd	2
4	WL-10-22	Lock Washer 6 Ext. Shakeproof	2
5	77805	Terminal - Stationary (Male)	1
6	292160	Timer & Knob Assy. (Incls. items 3, 10 & 11)	1
7	WS-2-18	Washer	2
8	124570	Switch Plate Assy	1
9	123109	Self-Tapping Screw 6-32 x ⅜ Truss Hd. "Taptite"	2
10	114703	Knob - Pointer	1
11	SC-13-7	Mach. Screw 5-40 x ¼ Flat Hd	2
12	SC-15-8	Mach. Screw 6-32 x ¼ Oval Hd	2
13	87711-82-1	Switch - Rockette (D.P.D.T.)	1
14	61285-1	Boot - Insulating (Cord & Plug)	1
15	SC-27-28	Mach. Screw 8-32 x ¼ Rd. Hd	1
16	WL-10-1	Lock Washer 8 Ext. Shakeproof	1
17	NS-10-11	Mach. Nut 8-32 Hex	1

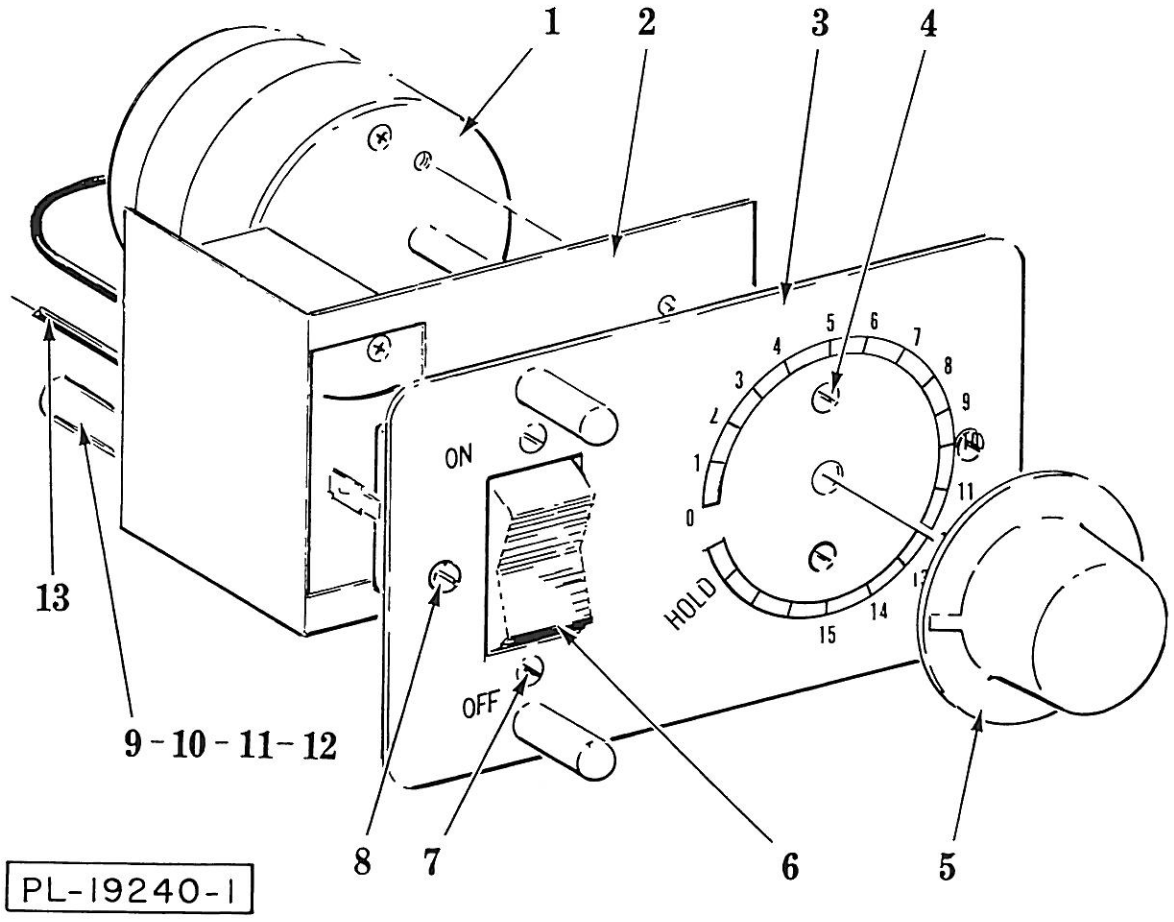

SWITCH & TIMER UNIT (AS200)
(MACH. ML'S 33427, 33435, 33437, 33439 38717, 38725, 38727 & 38729)

ILLUS. PL-19240-1	PART NO.	NAME OF PART[21]	AMT.
1	294650-4-5	Timer Assy. (115 V., 60 Hz.)	1
2	291743	Insulator	1
3	291741	Plate Assy	1
4	SC-13-7	Mach. Screw 5-40 × ¼ Flat Hd	2
5	291748	Knob	1
6	87711-82-1	Switch - Rockette	1
7	SC-15-8	Mach. Screw 6-32 × ¼ Oval Hd	2
8	123109	Serrated Screw 6-32 × ⅜ Rd. Hd	2
9	61285-1	Boot - Insulating (Cord & Plug)	1
10	SC-27-28	Mach. Screw 8-32 × ¼ Rd. Hd	1
11	WL-11-1	Lock Washer 8 Ext. Shakeproof	1
12	NS-10-11	Mach. Nut 8-32 Hex	1
13	87532-98	Lead (Timer to Switch)	1
	291814-1	Switch & Plate Assy. (Incls. items 1 thru 7)	1

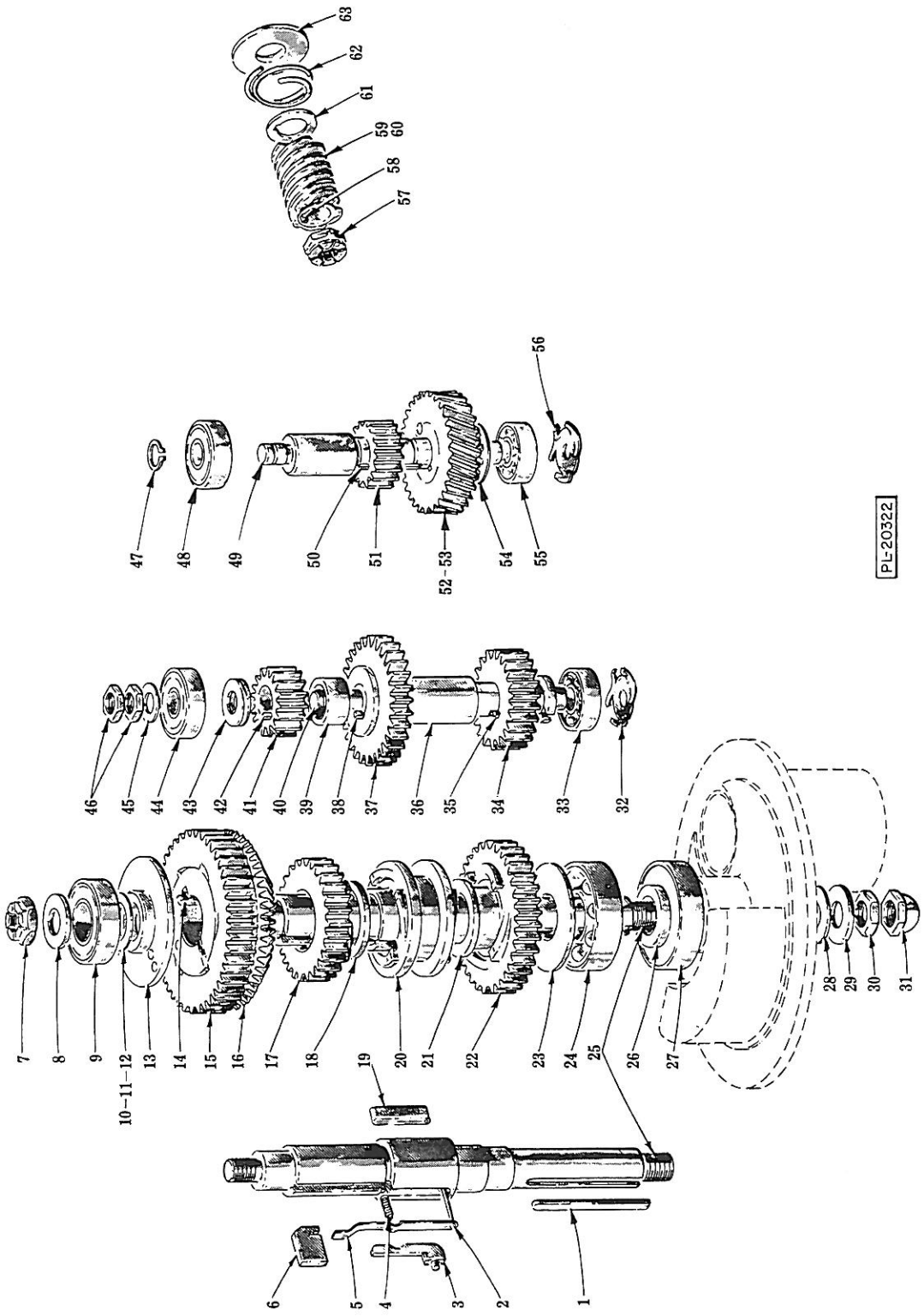

TRANSMISSION GEAR UNIT
(ML-38609, 33424 THRU 33439, ML-19204, 19205, 19207, 19208, ML-19210 THRU 19215 & 19219 THRU 19224)

TRANSMISSION GEAR UNIT
(ML-38609, 33424 THRU 33439, ML-19204, 19205, 19207, 19208, ML-19210 THRU 19215 & 19219 THRU 19224)

ILLUS. PL-20322	PART NO.	NAME OF PART[21]	AMT.
1	12430-17	Key	1
2	RS-32-10	Rivet	1
3	117116	Block - Diving Key Control	1
4	12759	Spring	1
5	12749	Arm - Diving Key Control	1
6	15528	Key - Diving	1
7	NS-32-29	Stop Nut ½-20 "Flexloc"	1
8	WS-8-13	Washer - Retaining	1
9	BB-20-18	Ball Bearing - N.D. #77503	1
10	WS-10-18	Shim - Bearing (.002 Thk.)	AR
11	WS-10-19	Shim - Bearing (.003 Thk.)	AR
12	WS-10-20	Shim - Bearing (.010 Thk.)	AR
13	102777	Spacer & Pin Assy	1
14	12430-59	Key	1
15	15225	Gear - Slow Speed (46T)	1
16	18800	Gear Bevel (46T)	1
17	12694	Gear - Clutch (29T)	1
18	12695	Bearing - Clutch Gear	1
19	16577	Key - Special Feather	1
20	70035-2	Sleeve - Clutch	1
21	12695	Bearing - Clutch Gear	1
22	12696	Gear - Clutch (38T)	1
23	12723	Spacer - Lower	1
24	BB-20-6	Ball Bearing - N.D. #7504	1
25	12750	Shaft - Center	1
26	14674	Spacer - Bearing	1
27	114695	Seal - Oil	1
28	124946	Washer (Fiber)	1
29	WS-24-1	Washer - Retaining (STL)	1
30	10928-2	Nut ½-20 Special	1
31	24715-3	Acorn Nut ½-20	1
32	SL-2-8	Spring - Preloading	1
33	BB-5-1	Ball Bearing - N.D. #3200	1
34	12699	Gear (23T)	1
35	109070-18	Key - Hardened	1
36	12697	Spacer - Lower	1
37	12700	Gear (32T)	1
38	109070-18	Key - Hardened	1
39	12698	Spacer - Central	1
*40	— — —	Shaft - Transmission	1
*41	— — —	Gear (15T)	1
42	109070-18	Key - Hardened	1
43	12744	Spacer - Upper	1
44	BB-5-2	Ball Bearing N.D. #7500	1
45	WS-6-36	Washer - Retaining	1
46	12710	Nut - Retaining	2
47	RR-10-10	Retaining Ring	1
48	BB-5-2	Ball Bearing - N.D. #7500	1
**49	— — —	Shaft - Worm Gear	1
50	12430-4	Key	1
51	103960	Gear (15T)	1
52	118237-1	Worm Wheel & Bushing Assy. (29T) (60 Hz.)	1
53	121139-1	Worm Wheel & Bushing Assy. (24T) (50 Hz.)	1
54	RR-10-16	Retaining Ring	1
55	BB-5-1	Ball Bearing - N.D. #3200	1
56	SL-2-8	Spring - Preloading	1
57	NS-32-23	Stop Nut 7/16-20 "Flexloc"	1
58	12747	Key	1
59	12743	Worm (5T) (60 Hz.)	1
60	12770	Worm (5T) (50 Hz.)	1
61	12754	Washer	1
62	12757	Spring - Shock Absorber	1
63	12711	Washer - Shock Absorber Spring	1
	24551	Center Shaft Assy. Unit (Incls. items 2, 4, 5, 19 & 25)	1
	293615	Worm Shaft Service Kit (60 Hz.) (Incls. items 49, 50, 51 & 52)	1
	293616	Worm Shaft Service Kit (50 Hz.) (Incls. item 49, 50, 51 & 53)	1
	293610	Transmission Shaft Assy. Service Kit (Incls. items 34, 35, 36, 37, 38, 40 & 43)	1
	102776	Center Shaft Assy. (Incls. items 2 thru 6, 13 thru 23 & 25)	1
		*Item 40 & 41 no longer available, order Transmission Shaft Service Kit 293609	1
		**Item 49 no longer available, order Worm Shaft Service Kit 293608	1

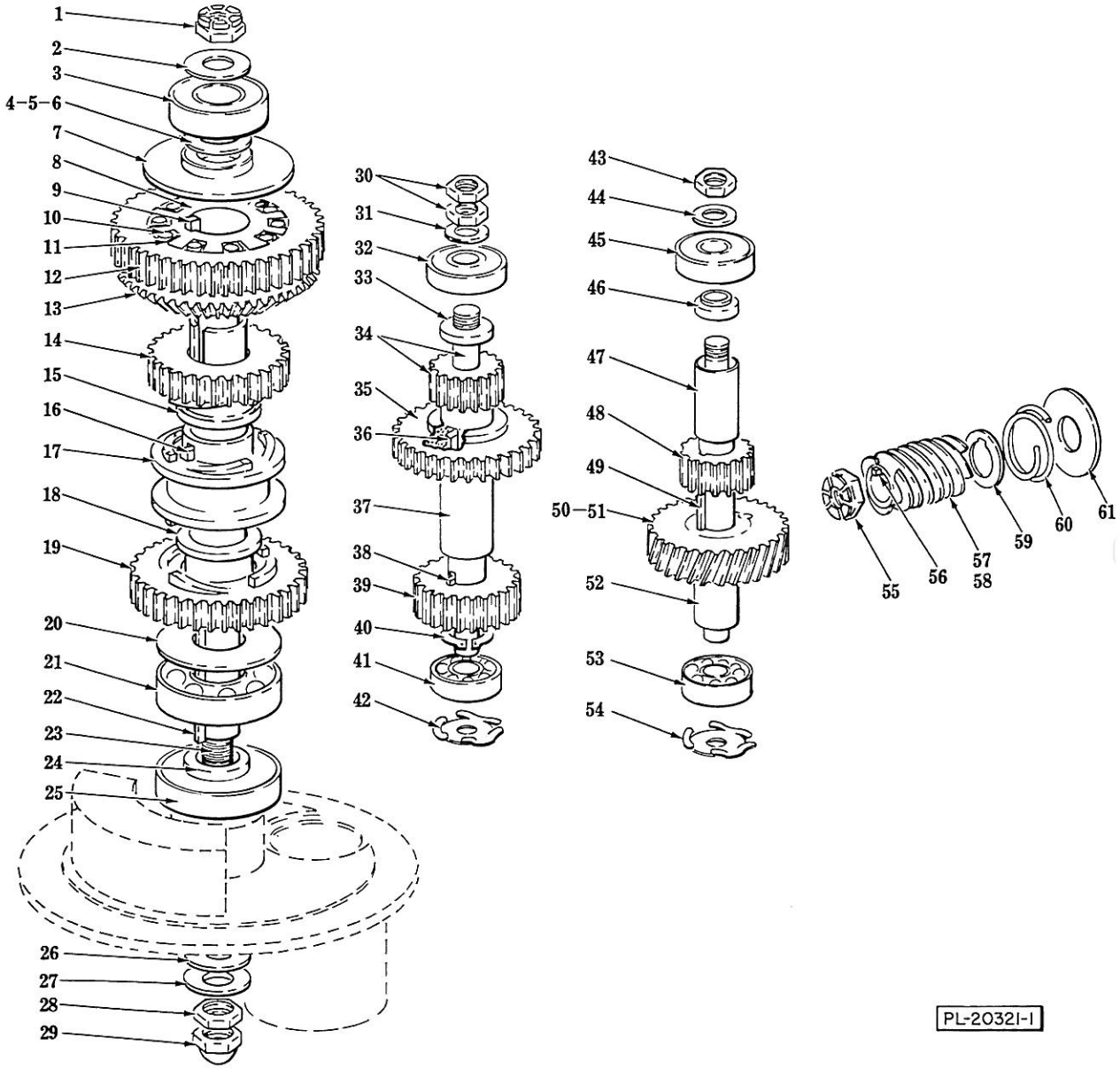

TRANSMISSION GEAR UNIT
(MACH. ML-38713 THRU 38729, 38906, 38907, 38908, 38909 & 38912)

TRANSMISSION GEAR UNIT
(MACH. ML-38713 THRU 38729, 38906, 38907, 38908, 38909 & 38912)

ILLUS. PL-20321-1	PART NO.	NAME OF PART[21]	AMT.
1	NS-32-29	Stop Nut ½-20 Flexloc	1
2	WS-8-13	Washer - Retaining	1
3	BB-20-18	Ball Bearing - N.D. #77503	1
4	WS-10-18	Washer - Bearing Shim (.002" Thk.)	AR
5	WS-10-19	Washer - Bearing Shim (.003" Thk.)	AR
6	WS-10-20	Washer - Bearing Shim (.010" Thk.)	AR
7	107145	Spacer - Planetary Shaft	1
8	124730	Sleeve - Roller Clutch Drive	1
9	12430-55	Key	1
10	124729	Clutch - Roller	10
11	124732	Spring - Roller	10
12	124752	Gear - Slow Speed (46T)	1
13	124733	Gear - Bevel (46T)	1
14	124744	Gear - Clutch (29T)	1
15	12695	Bearing - Clutch Gear	1
16	12430-59	Key - Clutch Sleeve	2
17	70035-1	Sleeve - Clutch	1
18	12695	Bearing - Clutch Gear	1
19	124743	Gear - Clutch (38T)	1
20	12723	Spacer - Lower	1
21	BB-20-6	Ball Bearing - N.D. #7504	1
22	12430-17	Key	1
23	124734	Shaft - Planetary	1
24	14674	Spacer - Bearing	1
25	114695	Seal - Oil	1
26	124946	Washer - Fiber	1
27	WS-24-1	Washer - Retaining (STL)	1
28	10928-2	Nut ½-20 Special	1
29	24715-3	Acorn Nut ½-20	1
30	12710	Nut - Retaining	2
31	WS-6-36	Washer - Retaining	1
32	BB-5-2	Ball Bearing - N.D. #7500	1
33	12744	Spacer - Upper	1
34	291236	Shaft - Transmission (15T)	1
35	124736	Gear (32T)	1
36	109070-18	Key	1
37	12697	Spacer - Lower	1
38	109070-18	Key	1
39	124760	Gear (23T)	1
40	RR-4-18	Retaining Ring	1
41	BB-5-1	Ball Bearing - N.D. #3200	1
42	SL-2-8	Spring - Preloading - N.D. #S-10-B	1
43	12710	Nut - Retaining	1
44	WS-6-36	Washer - Retaining	1
45	BB-5-2	Ball Bearing - N.D. #7500	1
46	124745	Washer	1
47	124765-1	Spacer - Gear	1
48	124748	Gear (15T)	1
49	12430-4	Key	1
50	124751-3	Worm Wheel & Bushing Assy. (60 Hz.)	1
51	124749-2	Worm Wheel & Bushing Assy. (50 Hz.)	1
52	291128	Shaft - Worm Wheel	1
53	BB-5-1	Ball Bearing - N.D. #3200	1
54	SL-2-8	Spring - Preloading - N.D. #S-10-B	1
55	NS-32-23	Stop Nut 7/16-20 "Flexloc"	1
56	12747	Key	1
57	291221	Worm (5T) (60 Hz.)	1
58	70407	Worm (5T) (50 Hz.)	1
59	12754	Washer	1
60	12757	Spring - Shock Absorber	1
61	12711	Washer - Shock Absorber Spring	1
	292799	Planetary Shaft Assy. (Incls. items 7, 8, 9, 12 thru 20 & 23)	1
	292800	Transmission Shaft & Assy. (Incls. items 33 thru 40)	1
	292798-1	Worm Wheel Shaft Assy. (60 Hz.) (Incls. items 46, 47, 48, 49, 50 & 52)	1
	292798-2	Worm Wheel Shaft Assy. (50 Hz.) (Incls. items 46, 47, 48, 49, 51 & 52)	1

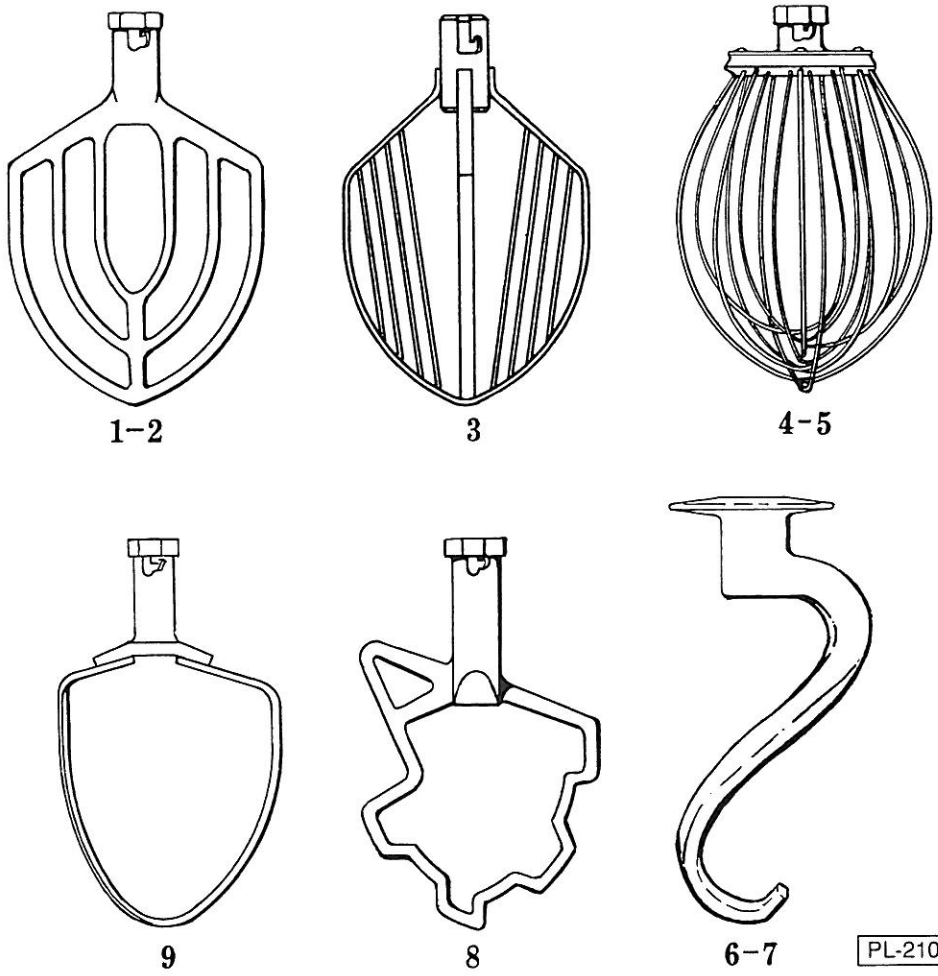

AGITATORS

ILLUS. PL-21010	PART NO. 20 QT.	PART NO. 12 QT.	NAME OF PART[33]	AMT.
1	23126	23502	"B" Flat Beater	1
2	24822	24830	"B" Flat Beater (SST)	1
3	123753	— — —	"C" Wing Whip	1
4	23511-2	23523-2	"D" Wire Whip (SST)	1
5	23511-1	23523-1	"D" Wire Whip (Tinned)	1
6	119984	— — —	"ED" Dough Arm	1
7	23467	62886	"E" Dough Arm	1
8	8022	— — —	"S" Sweet Dough Beater	1
9	74286	— — —	"P" Pastry Knife	1