INSTRUCTIONS



P660 MIXER

P660 MIXERS

ML-134198, 134199, 134200

HOBART
CORPORATION

701 S. RIDGE AVENUE
TROY, OHIO 45374-0001

937 332-3000

www.hobartcorp.com

F-34818 Rev. B (Apr. 2003)



Model P660 Mixer

© HOBART CORPORATION, 2002

TABLE OF CONTENTS

GENERAL 4

INSTALLATION 5

- Unpacking 5
- Location 5
- Electrical Connections 6
- Electrical Data 6

OPERATION 7

- Electromechanical Timer Controls (When Equipped) 7
- Programmable Timer Controller (When Equipped) 8
- Changing Speeds 11
- Bowl Lift 11
- Mixing 11
- Wire Cage assembly (Before September, 2002 Production Fig. 5) 12
- Wire Cage assembly (After September, 2002 Production Fig. 6) 13
- Attachments 15
- Mixer Speeds (When Equipped) 15

CLEANING 15

MAINTENANCE 16

- Lubrication 16
- Adjustments 18

TROUBLESHOOTING 19

- Service 19

Installation, Operation and Care of P660 MIXERS

SAVE THESE INSTRUCTIONS

GENERAL

The P660 model mixer is a heavy-duty, 60-quart mixer which is designed primarily for preparing dough, batter and pastry. It features a 2½ horsepower Hobart-built motor, a #12 Attachment Hub and an electromechanical timer as standard equipment.

Also available are the following: 30-, 40- or 60-quart bowls, bowl adapters, special agitators and a variety of other accessories and attachments. These are described in a separate *Use and Applications Handbook,* which is furnished with each mixer.

Bowl Guard is standard equipment on all P660 models.

Programmable timer controller is optional on P660 models.

INSTALLATION

UNPACKING

Immediately after unpacking the mixer, check for possible shipping damage. If this machine is found to be damaged after unpacking, save the packaging material and contact the carrier within 15 days of delivery.

Prior to installation, test the electrical service to make sure that it agrees with the specifications on the machine data plate.

LOCATION

Place the mixer in its operating location. There should be adequate space around the mixer for the user to operate the controls and to install and remove bowls. The area above the mixer should allow the top cover to be removed for routine maintenance and servicing.

Holes are provided in the base for permanent bolting to the floor; although this is not necessary in normal installations. Four plastic plugs are supplied with the mixer to plug these holes if they are not used.

Once placed in the operating location, level the mixer.

1. Remove the top cover screws and the top cover.
2. Place a level on the machined surface of the transmission case (Fig. 1).
3. Slide shims under the legs (base) of the mixer as required to level it front-to-back and side-to-side.

NOTE: Do not replace the top cover until installation is complete.

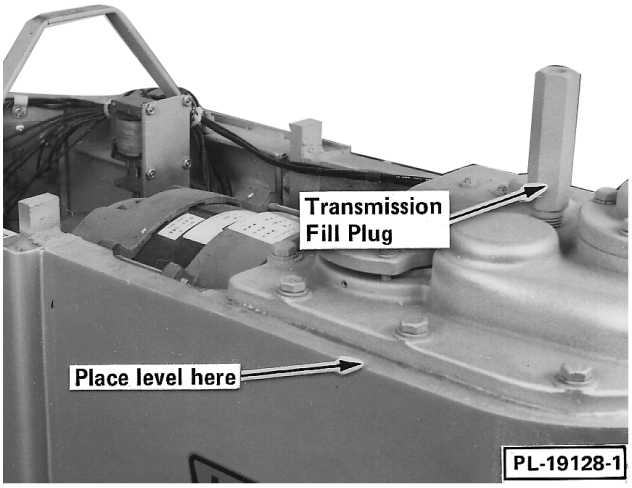

Fig. 1

Check Lubrication Before Use

This mixer is shipped with oil in the transmission. Mixer production prior to September 2002 will have oil in the planetary. Mixer production after September 2002 will have grease in the planetary. Check oil levels before starting mixer. Refer to Lubrication, pages 16 to 17, for applicable lubrication procedures.

ELECTRICAL CONNECTIONS

WARNING: ELECTRICAL AND GROUNDING CONNECTIONS MUST COMPLY WITH THE APPLICABLE PORTION OF THE NATIONAL ELECTRICAL CODE AND/OR OTHER LOCAL ELECTRICAL CODES.

WARNING: DISCONNECT THE ELECTRICAL POWER TO THE MACHINE AND FOLLOW LOCKOUT / TAGOUT PROCEDURES.

ELECTRICAL DATA

Models	Volts /Hz/Ph	Rated Amps	Circuit Size (Amps)	Fuse* Size (Amps)	60°C Copper WIre Size	Circuit Size (Amps)	Circuit Breaker** (Amps)	60°C Copper Wire Size
P660	208/60/1	20.0	30	30	10	30	30	12
P660	240/60/1	17.0	25	25	10	30	30	10
P660	208/240/60/3	8.6	15	15	14	20	20	12
			*Dual Element Time-Delay Fuse			**Inverse Time Circuit Breaker		

A hole for 3/4" trade size conduit is located at the top of the pedestal. Make electrical connections per the wiring diagram located on the inside of the Top Cover.

Check Rotation (Three-Phase Machines Only)

Three-phase machines must be connected so the planetary rotates in the direction of the arrow on the Drip Cup. To check rotation:

1. Set the Gear Shift Lever on 1.
2. Apply power to the mixer, set the electromechanical timer on HOLD or, if equipped with a programmable timer controller, set it on [-- : --]. With the Bowl Support all the way up, momentarily run the machine by pushing the START and then STOP buttons.
3. If rotation is incorrect, disconnect electrical power supply and interchange any two of the incoming power supply leads.

OPERATION

WARNING: MOVING BEATER IN BOWL. KEEP HANDS, CLOTHING AND UTENSILS OUT WHILE IN OPERATION. DO NOT USE WITHOUT INTERLOCKED GUARD.

Every P660 mixer is equipped with either an Electromechanical Timer Control (Fig. 3 described at the bottom of this page) or a Programmable Timer Controller (Fig. 4 described on pages 8 to 10). Also, become familiar with the other operating parts and their functions, which are referenced throughout the Operation section (pages 7 to 15).

The Bowl Guard must be in position or the mixer will not operate. Refer to page 12 to 13.

If the Bowl Support is not all the way up, the mixer will not operate unless the START button is held in.

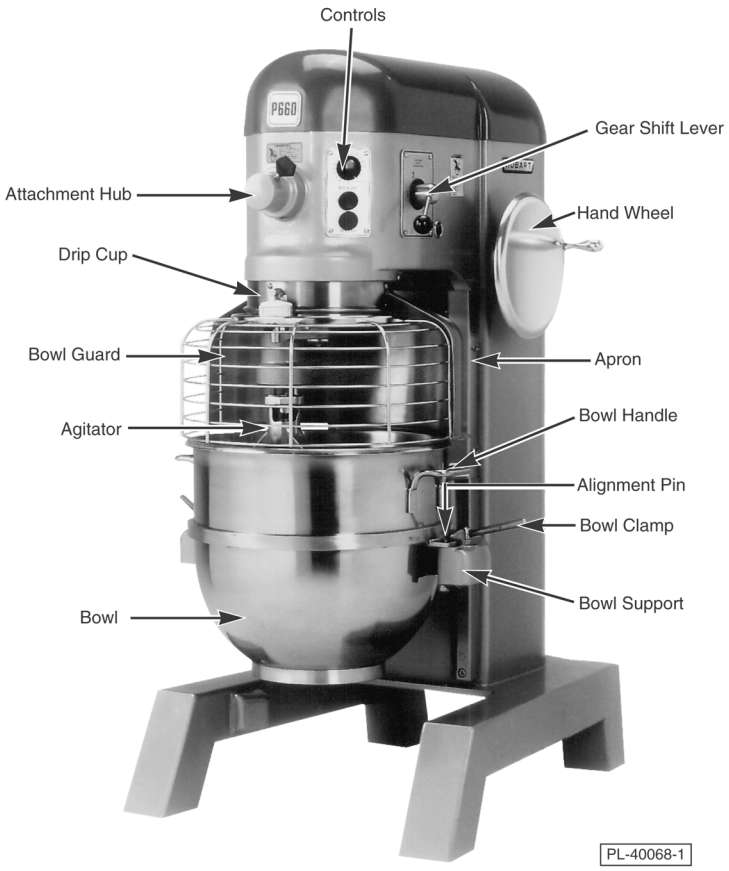

Fig. 2

ELECTROMECHANICAL TIMER CONTROLS (**When Equipped**)

The START button is used to start the mixer.

The STOP button is used to stop the mixer.

The TIMER is used in conjunction with the START button for timed mixing operations and will stop the mixer when a preset time has elapsed.

For non-timed mixing, set the timer on HOLD and use the STOP button to stop the mixer.

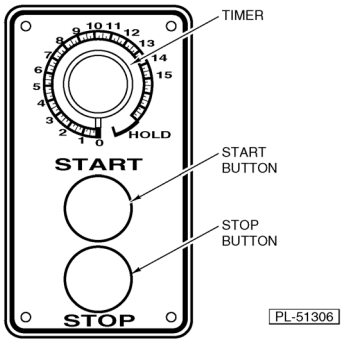

Fig. 3

PROGRAMMABLE TIMER CONTROLLER (When Equipped)

At idle, the TIME DISPLAY [- - : - -] shows that no time has been set (Fig. 4).

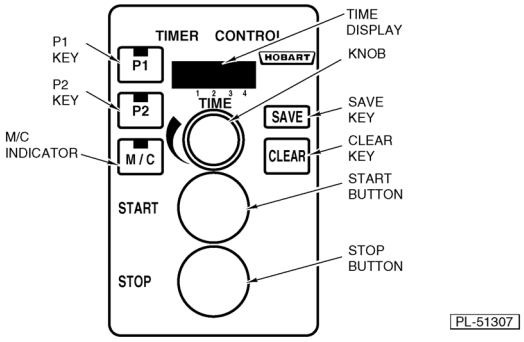

Fig. 4

Timer Keys	**Programming Function** (if the mixer is not mixing)
P1	Contains up to four preset times. Displays each preset time sequentially.
P2	Contains up to four additional preset times. Displays each preset time sequentially.
TIME Knob	Turn the TIME knob until the desired time is shown on the TIME DISPLAY.
SAVE	Replaces the preset time with the indicated time.
CLEAR	Returns to idle from a programming function.

Continuous Mixing

START and STOP buttons control mixing operation.

Beginning from the idle display [- - : - -], press START to begin mixing. The M/C Indicator will be lit, and the total mixing time will be indicated (minutes and seconds).

Press STOP when mixing is done. The M/C Indicator light is lit, and the idle display [-- : --] returns.

Set Mixing Time (Using Time Knob)

Beginning from the idle display [- - : - -], turn the TIME knob to set the mixing time. The M/C Indicator will be lit.

START and STOP buttons control mixing operation.

Press START to begin mixing; the timer will count down from the set time to [00 : 00].

If STOP is pressed, both mixing and timer countdown will be interrupted. After pressing STOP, press START to resume both mixing and timer countdown, or press CLEAR to return to the idle display.

When the timer reaches [00 : 00], the mixer stops and the M/C Indicator light is lit. A tone sounds for 2 seconds and the idle display [- - : - -] returns.

Set Mixing Time (Preset Keys P1 or P2)

Each preset key has four time settings. The indicator lights above the number 1, 2, 3 or 4 and the P1 or P2 indicator light identify which preset time is being displayed. The chart below shows the default settings; the next page shows how to revise these preset times. The TIME knob can be used to adjust the mixing time if the TIME knob is turned prior to pressing START.

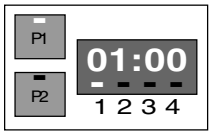

▭ Indicators above P1 and 1 indicate the first preset time contained in P1.

Beginning from the idle display [-- : --], press P1 or P2 to display the #1 preset mixing time. (Pressing P1 or P2 again will display the next preset time, etc.)

☞ The TIME knob can adjust the time.

START and STOP buttons control mixing operation.

Press START to begin mixing; the timer will countdown from the set time to [00 : 00].

If STOP is pressed, both mixing and timer countdown will be interrupted. After pressing STOP, press START to resume both mixing and timer countdown, or press CLEAR to return to the idle display.

When the mixer is stopped, you may perform the following tasks: add ingredients, change speed, reset the timer, continue mixing or unload.

When the timer reaches [00 : 00], the mixer stops. A tone sounds for 2 seconds and the next preset mixing time displays. When the last preset time reaches [00 : 00], the P1 or P2 indicator goes off and the idle display [-- : --] returns. Repeat from ☞ to complete four preset times.

The timer reverts to the factory-programmed preset times after any power interruption.

FACTORY-PROGRAMMED PRESET TIMES

Preset Key	Indicator			
	1	2	3	4
P1	01:00	02:00	10:00	00:00
P2	02:00	01:00	05:00	03:00

Revise Preset Mixing Times (Preset Keys P1 or P2)

Each preset key has four preset time settings. The indicator lights above the number 1, 2, 3 or 4 and the P1 or P2 indicator light identify which preset time is being displayed.

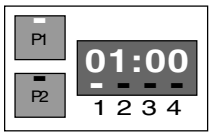

▭ Indicators above P1 and 1 indicate the first preset time contained in P1.

Beginning from the idle display [- - : - -], press P1 or P2 to display the #1 preset mixing time. (Pressing P1 or P2 again will display the next preset time, etc.)

☞ Turn the TIME knob to change the time for the indicated preset.

Press SAVE to retain the revised time and move to the next preset time.

Repeat from ☞ for each preset time (1, 2, 3 and 4 contained in P1 or P2).

Press CLEAR to retain the saved times and return to the idle display [-- : --].

The timer reverts to the factory-programmed preset times after any power interruption.

FACTORY PROGRAMMED PRESET TIMES

Preset Key	Indicator			
	1	2	3	4
P1	01:00	02:00	10:00	00:00
P2	02:00	01:00	05:00	03:00

CHANGING SPEEDS

The Gear Shift Lever is used to change speeds. Always stop the mixer before changing speeds.

1. Push the STOP button.
2. Move the Gear Shift Lever to the desired speed.
3. Push the START button to restart the mixer.

NOTE: If you do not stop the mixer to change speeds, it will automatically shut itself off and you will have to restart it after changing speeds.

BOWL LIFT

The hand wheel is used to raise and lower the bowl on mixers with the standard bowl lift. Turn the hand wheel *clockwise* to raise the bowl or *counterclockwise* to lower it.

MIXING

This section explains operation of the mixer and how to install bowls, agitators and attachments. A separate *Use and Applications Handbook* is provided with the mixer, which contains information on mixing procedures and outlines specific uses for agitators, attachments and accessories.

Bowl

New mixer bowls and agitators (beaters, whips and dough arms) should be thoroughly washed with hot water and a mild soap solution, rinsed with either a mild soda or vinegar solution and thoroughly rinsed with clear water before being used. This cleaning procedure should also be followed for bowls and agitators before whipping egg whites or whole eggs.

The bowl must be installed before the agitator is installed.

To install the bowl, fully lower the Bowl Support (Fig. 2). Position the bowl so the alignment bracket on the back of the bowl is under the retainer on the Bowl Support and the Alignment Pins on the front of the Bowl Support fit in the holes in the bowl. Lock the bowl in place by rotating the Bowl Clamps over the ears of the bowl.

If a bowl adapter is required, install it on the Bowl Support as you would the bowl and then install the bowl on the adapter.

Agitator

To install an agitator, the bowl must be installed and fully lowered. Place the agitator in the bowl, push the agitator up on the agitator shaft. Turn the agitator *clockwise* to seat the shaft pin in the slot of the agitator shank.

To Raise the Bowl While Mixing

To raise the bowl while the agitator is mixing the product (when required by recipe or when using the bowl scraper attachment):

1. Load ingredients.
2. Close Wire Cage assembly.
3. Select low speed.
4. To begin mixing, press and hold the START button; then raise the bowl.

WIRE CAGE ASSEMBLY (Before September, 2002 Production Fig. 5)

The Wire Cage assembly can be rotated out of the way to add ingredients or to access the bowl and agitator. Some ingredients, such as liquids or powders, may be added through the Wire Cage assembly while the mixer is in operation. An ingredient chute accessory is available to assist in adding ingredients. Contact your local Hobart Sales representative for more information.

Rotate Wire Cage assembly

Push the Latch in to release the Centering Pin from the Centering Ramp. Note how the grooves on the nylon Retainers allow the Wire Cage to ride around the Circular Ridge on the Planetary Drip Cup. The Wire Cage can rotate 360° left or right. When the Wire Cage returns to the Front-Center Position, the Centering Pin is captured and held by the Centering Ramp, restricting rotation of the Wire Cage until the Latch is pressed again.

The Wire Cage must be in the Front-Center Position for the mixer to operate.

Remove Wire Cage assembly

Lower the bowl. Rotate the Wire Cage to the rear. Remove both agitator and bowl. Return the Wire Cage to the front.

While holding the Wire Cage securely with both hands, use your thumb to push down on the Black Release Knob. Lower and remove the Wire Cage. Wash it in a sink, rinse with clear water and dry with a clean cloth.

The stainless steel Splash Guard can be wiped off or washed easily with a cloth or sponge and warm, soapy water. Rinse with clear water and dry with a clean cloth.

Reinstall the Wire Cage assembly

Hold the Wire Cage so its top ring is positioned around the Planetary Drip Cup with the grooves in both nylon Rear Retainers straddling the Ridge on the Drip Cup. Push in the Front-Center Retainer until it stays in and so that its grooves also straddle the Ridge on the Drip Cup. The Wire Cage is properly assembled when all three Retainers straddle the Ridge on the Drip Cup in the three opposed locations.

Rotate the Wire Cage to the rear to install or remove the agitator and bowl or to add ingredients.

Return the Wire Cage to its Front-Center Position to operate the mixer.

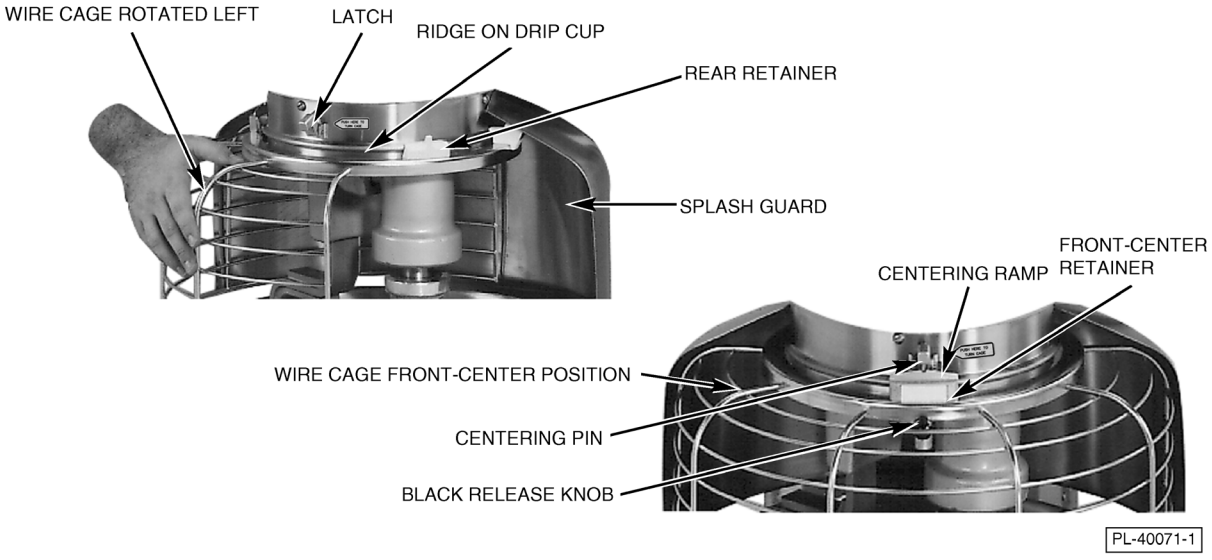

Fig. 5

WIRE CAGE ASSEMBLY (After September, 2002 Production Fig. 6)

The Wire Cage assembly can be rotated out of the way to add ingredients or to access the bowl and agitator. Some ingredients, such as liquids or powders, may be added through the Wire Cage assembly while the mixer is in operation. An ingredient chute accessory is available to assist in adding ingredients. Contact your local Hobart Sales representative for more information.

Note how the grooves on the nylon retainer shoes allow the wire cage to ride around the Circular Ridge on the Planetary Drip Cup.

- To open the Wire Cage assembly, rotate it to your left.
- To close the Wire Cage assembly, rotate it to your right until it stops in the Front-Center Position.

NOTE: The Wire Cage assembly must be returned to the Front-Center Position for the mixer to operate.

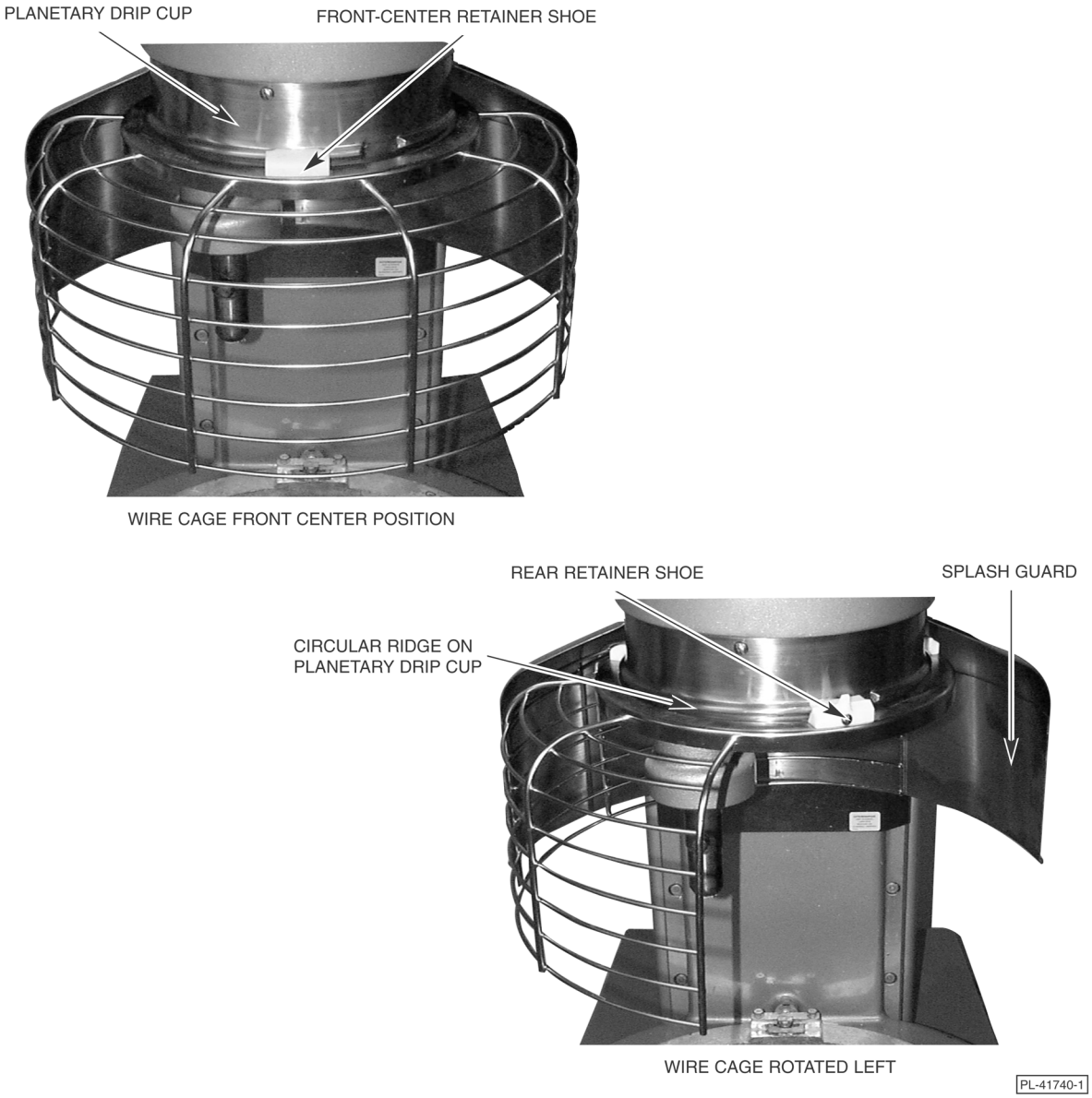

Fig. 6

Remove Wire Cage assembly (Fig. 7)

1. Lower the bowl. Remove the accessory and bowl.
2. While holding the Wire Cage securely with both hands, rotate it to your left until the Front-Center Retainer Shoe reaches the gap in the circular ridge of the Planetary Drip Cup.
3. Lower the front of the wire cage and move the Wire Cage assembly slightly to the rear so the rear Retainer Shoes clear the ridge of the drip cup. The Wire Cage assembly can now be removed.

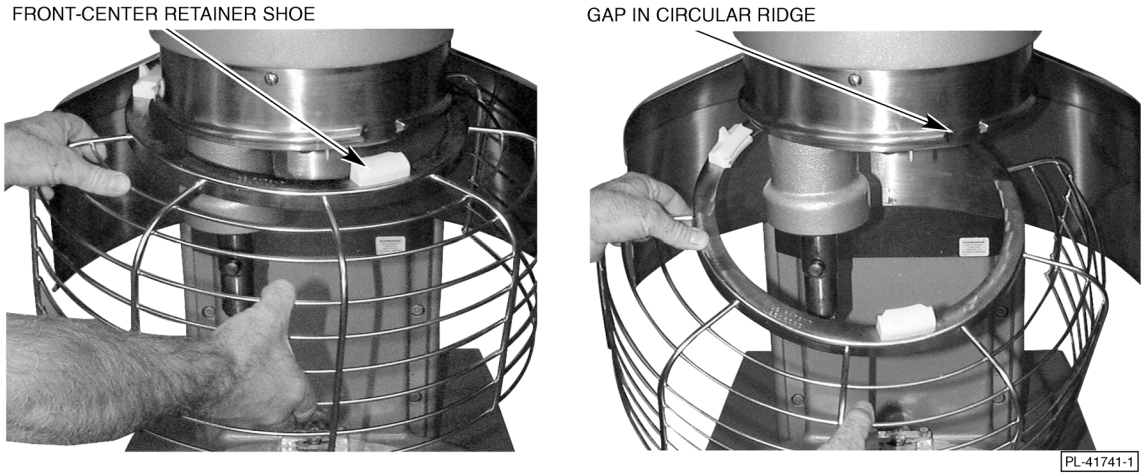

Fig. 7

4. Wash the Wire Cage assembly in a sink, rinse with clear water and dry with a clean cloth.
5. The stainless steel Splash Guard can be wiped off and/or washed with a cloth or sponge using warm, soapy water. Rinse with clear water and dry with a clean cloth.

Reinstall Wire Cage assembly (Fig. 7)

1. Position the ring of the Wire Cage assembly so the Front-Center Retainer Shoe is lined up with the gap in the Circular Ridge of the Planetary Drip Cup.
2. Position the grooves so the rear Retainer Shoes straddle the Circular Ridge on the Planetary Drip Cup.
3. Lift the front of the Wire Cage assembly so the Front-Center Retainer shoe passes up through the gap in the Circular Ridge on the Planetary Drip Cup.
4. Rotate the Wire Cage assembly to your right until all three retainer shoes straddle the ridge on the Drip Cup in the three opposed locations.
5. Continue rotating the Wire Cage assembly so the opening is to the front of the mixer (to install the accessory) or until it stops at the Front-Center Position (Fig 6).

ATTACHMENTS

To install an attachment, loosen the Attachment Hub thumb screw and remove the plug. Insert the attachment into the Attachment Hub, making certain that the square shank of the attachment is in the square driver of the mixer. Secure the attachment by tightening the thumb screw.

Move the Gear Shift Lever to the desired speed. With the Bowl Support all the way up and the Wire Cage assembly in the Front-Center Position, start the mixer to operate the attachment.

The meat and food chopper attachment should be operated in second or third speed. If material in the cylinder stalls the mixer, push the STOP button at once. Do not attempt to restart the mixer in a lower speed; remove the adjusting ring, knife, plate and worm and clear any obstruction.

NOTE: This attachment must not be used to chop bread crumbs.

NOTE: Attachment Hub should not be used while mixing.

Bowl Scraper Attachment

The mixer bowl scraper attachment (when ordered) is provided with a separate instruction manual covering its installation, operation, use and care.

MIXER SPEEDS (WHEN EQUIPPED)

Speed 1 (Low) — This speed is for incorporating ingredients, preparing pastry and finishing heavier batters and doughs.

Speed 2 (Medium-low) — This speed is for finishing most dough and batter recipes.

On P660 mixers equipped with single-speed gearing, all classes of work are performed at that intermediate speed.

CLEANING

WARNING: DISCONNECT THE ELECTRICAL POWER TO THE MACHINE AND FOLLOW LOCKOUT / TAGOUT PROCEDURES.

A flat scraper is furnished to aid in cleaning bowls and agitators.

The mixer should be thoroughly cleaned daily. Do not use a hose to clean the mixer — use a clean, damp cloth. The base allows ample room for cleaning under the mixer. The Apron can be removed by loosening the thumb screws. Behind the Apron is an access cover which can be removed for cleaning.

The Drip Cup-Splash Guard (which is secured by three screws) should be removed periodically and wiped clean.

MAINTENANCE

WARNING: DISCONNECT THE ELECTRICAL POWER TO THE MACHINE AND FOLLOW LOCKOUT / TAGOUT PROCEDURES.

LUBRICATION

Planetary (Before September, 2002 Production)

The planetary oil should be checked periodically. To check, disconnect electrical power and remove the drip cup-splash guard, which is secured by three screws. Remove the Planetary Fill Plug (Fig. 8). Oil should be even with the bottom of the Planetary Fill Plug hole. If it is not, slowly add the recommended planetary lubricant until it is. Replace the Planetary Fill Plug and the drip cup-splash guard.

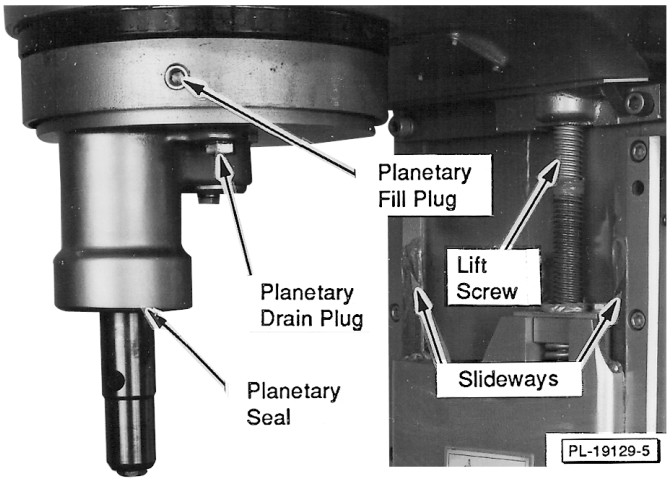

Fig. 8

A drain plug (Fig. 8) is located on the bottom of the planetary. Should draining become necessary, remove the Drip Cup-Splash Guard and place a suitable catch pan under the drain plug. Remove the drain plug, allow the oil to completely drain and replace the drain plug. Remove the Planetary Fill Plug and pour in 6 fl. oz. of the recommended planetary lubricant. Replace the Planetary Fill Plug and the drip cup-splash guard. Contact your local Hobart Service Office for the recommended planetary lubricant.

Planetary (After September, 2002 Production)

Mixers produced after September, 2002 have a grease-filled planetary and do not require routine lubrication maintenance.

Planetary Seal

Occasionally, the Planetary Seal (Fig. 8) may become dry and begin to squeak. To correct this, apply some lubricant under the lip of the seal.

Transmission

The transmission oil should be even with the line on the Oil Level Gauge when the motor is not running. If the oil falls below this line, disconnect electrical power supply and remove the top cover, which is secured by two screws. Remove the Transmission Fill Plug (Fig. 9) and add a small amount of the recommended transmission oil until it returns to the proper level. Do not overfill the transmission as leakage may result. Contact your local Hobart Service Office for the recommended transmission oil.

Bowl Lift

The Slideways and Lift Screw (Fig. 8) should be lubricated approximately twice a year. To reach these areas, fully lower the Bowl Support and remove the Apron, which is secured by four thumb screws. Apply a thin coat of Lubriplate 630AA (supplied) on the Bowl Clamp area of the Bowl Supports, each Slideway and the Lift Screw. Replace the Apron.

On units with a manual bowl lift, the Hand Wheel gearing should be lubricated periodically. To do this, disconnect electrical power supply and remove the top cover, which is secured by two screws. Apply a coat of Lubriplate 630AA on the gear teeth and replace the top cover.

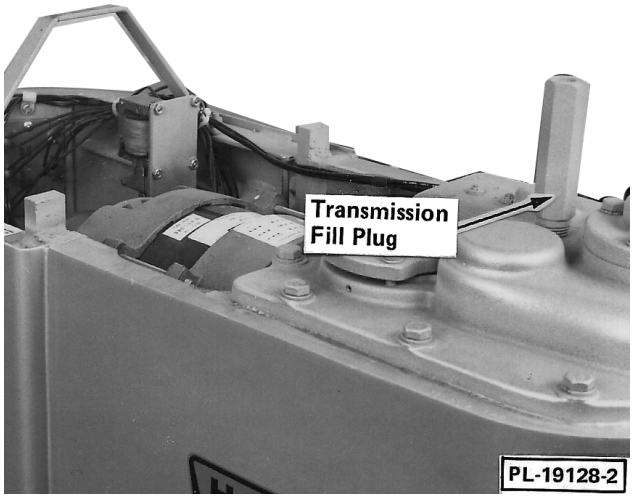

Fig. 9

ADJUSTMENTS

Agitator Clearance

The agitator clearance should be checked with each bowl change. The agitator must not touch the bowl. The maximum clearance between the bottom of the bowl and the B flat beater is 1/8" (3 mm). The maximum clearance between the bottom of the bowl and the E or ED dough arm is 5/16" (8 mm).

Install a bowl and agitator. If the bowl and beater come into contact before the Bowl Support reaches its stop, adjust the Stop Screw upwards following the procedure below.

Measure the Clearance

Pour enough flour in the bowl to cover the bottom of the bowl where the beater travels. With the bowl fully raised, briefly run the mixer in speed 1.

Turn off the mixer, disconnect electrical power supply and measure the depth of flour where the beater has traced a path. This measurement should be taken at several points around the bowl to assure accuracy.

Adjust the Bowl/Agitator Clearance

1. Remove the Apron (which is secured by four thumb screws).
2. Loosen the Bottom Locking Nut (Fig. 10), and turn the Stop Screw *counterclockwise* to increase the clearance or *clockwise* to decrease the clearance.
3. Tighten the Locking Nut while holding the Stop Screw.

   Caution: Make sure the Switch button on the Bowl Height Sensing Switch is never below the bottom of the Nylon Actuator.

4. When the Bowl Support is fully raised, the Switch button on the Bowl Height Sensing Switch should be 1/8" (3 mm) above the bottom of the Nylon Actuator. If necessary, adjust the Locking Nuts above and below the Nylon Actuator to move it up or down.
5. After the adjustments are made, replace the Apron.
6. Reconnect the electrical power supply.
7. Carefully operate the bowl lift several times to check the adjustment.

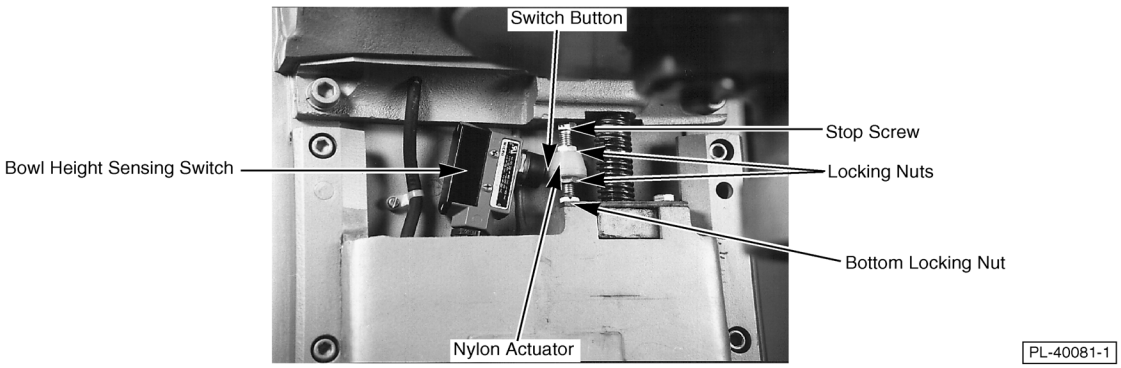

Fig. 10

Bowl Clamps

The height of the Bowl Clamp is controlled by a spring washer and Locking Nut, which are located on the bottom of the Bowl Support. Turn the Locking Nut *clockwise* to loosen the clamp or *counterclockwise* to tighten it. If repeated adjustments are necessary, contact your local Hobart Service Office.

TROUBLESHOOTING

SYMPTOMS	POSSIBLE CAUSES
Mixer will not start.	1. Gear Shift Lever between gears (not fully engaged). 2. Circuit protector in open position — check fuse or disconnect switch. 3. Mixer or attachment overloaded. 4. Bowl not all the way up. 5. Wire Cage assembly is not in the Front-Center Position.
Agitator touches bowl.	1. Bowl Clamp(s) not closed. 2. Improper agitator clearance — see Maintenance for adjustment procedure. 3. Bowl Clamp(s) improperly adjusted — see Maintenance for adjustment procedure.
Planetary Seal squeaks.	1. Seal requires occasional lubrication — see Maintenance.

SERVICE

If service is needed on this equipment, contact your local Hobart Service Office.

NOTES