CATALOG OF REPLACEMENT PARTS



29976

SALAD DRYER

SDPE
ML-139107
SDPS
ML-139108
SD97
ML-139112

A product of HOBART 701 S. RIDGE AVENUE TROY, OHIO 45374-0001

FORM 43171 Rev. A (February 2021)

 © HOBART 2021

Table of Contents

5 SDPE SALAD DRYER
7 SDPS SALAD DRYER
9 SD97 SALAD DRYER

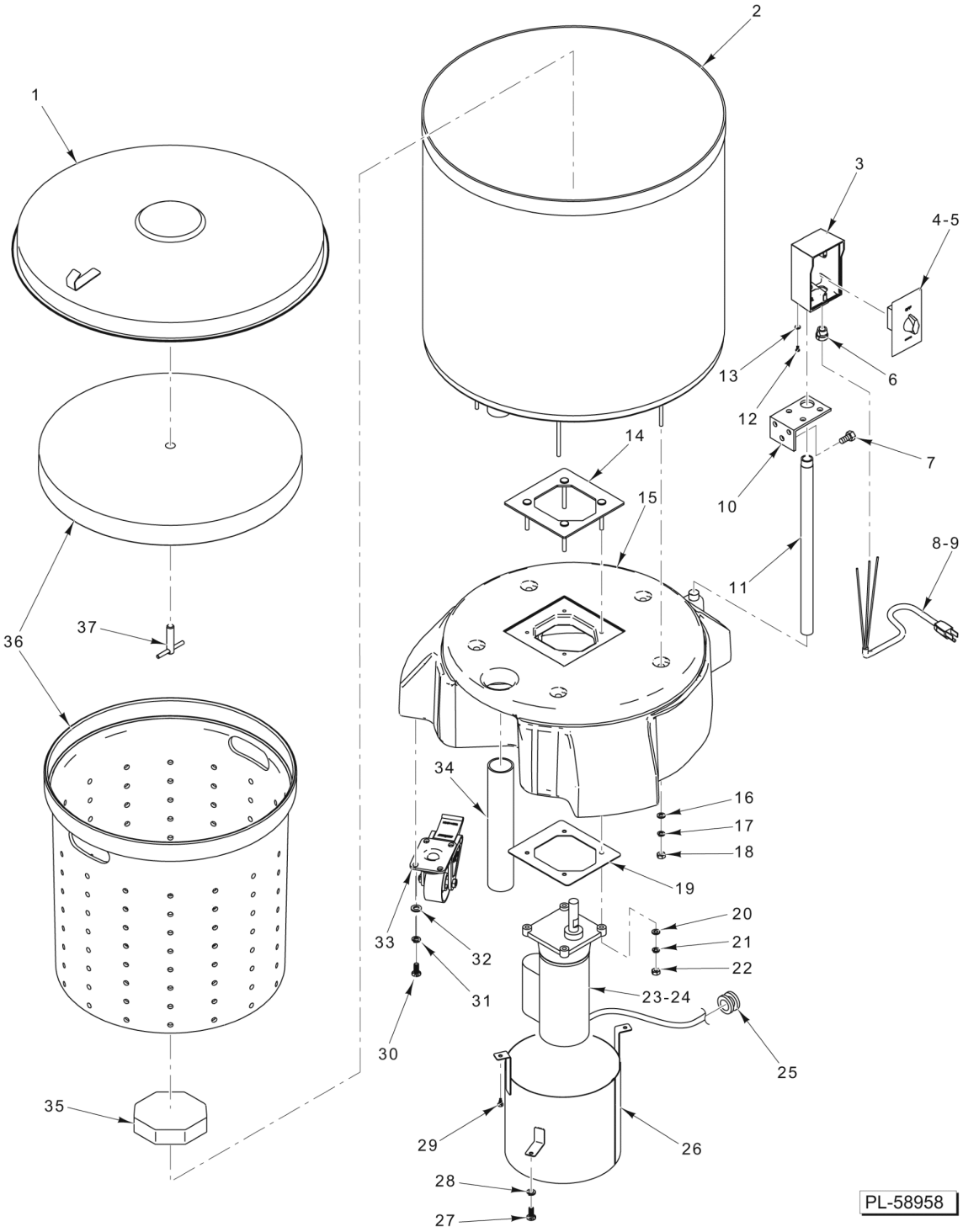

SDPE SALAD DRYER

SDPE SALAD DRYER

ILLUS. PL-58958	PART NO.	NAME OF PART	AMT.
1	01-505001-00HPE	Lid - Outer polyethylene (With Hook)	1
2		Tub Polyethylene Not Available for Service	AR
3	01-505034-000PL	Box - Electrical Timer	1
4	01-505037-000PE	Timer Intermatic (Incls. Knob)	1
5	01-505037-0000C	Cover - Timer	1
6	01-505036-000PE	Bushing - Cable Relief	1
7	01-505034-0000A	Mach. Screw Phil. Pan Hd	3
8	01-505039-000PE	Cord - Power Supply (115 V.)	1
9	01-505039-00PEA	Cord - Power Supply (230 V.)	1
10	01-505014-000PE	Bracket	1
11	01-505029-000PE	Pipe - Electrical Conduit	1
12	01-505049-000PE	Screw, 10-24 X 1/2 Cap	3
13	01-505011-0000A	Washer	3
14	01-505017-000PE	Mount -Top Motor	1
15	01-915052	Base - Polyethylene (Grey)	1
16	01-505044-000PS	Washer	10
17	01-505012-00001	Lockwasher	5
18	01-505012-00002	Nut	5
19	01-505017-00BPE	Plate - Motor Mount Bottom	1
20	01-505044-000PS	Washer	8
21	01-505012-00003	Lockwasher	4
22	01-505012-00002	Nut	4
23	01-505026-000PE	Motor - Gear (115 V., 60 Hz., 1 Ph.)	1
24	01-505026-00PEA	Motor - Gear (230 V., 60 Hz., 1 Ph.)	1
	01-505026-00PEB	Motor - Gear (230 V., 50 Hz., 1 Ph.)	1
25	01-505028-000PE	Grommet - Rubber (Not used after Serial Number 311509672)	1
26	01-505022-000PE	Splash Guard - Motor (Not used after Serial Number 311509672)	1
27	01-505012-00004	Mach. Screw Hex Hd	1
28	01-505012-00003	Lockwasher	1
29	01-505034-0000A	Mach. Screw Phil. Pan Hd	2
30	01-505043-000PS	Mach. Screw 8-18 Hex Hd	4
31	01-505012-00003	Lockwasher	4
32	01-505011-0000A	Washer	8
33	01-505042-000PE	Caster	3
34	01-505013-0000A	Drain - Pipe Extension Hose	1
35	01-505027-000PE	Driver - Octagonal (Right-Hand Thread)	1
36	01-505009-00001	Basket - Dryer (Incls. Lid)	1
37	01-505006-000PE	T-Handle Assy	1

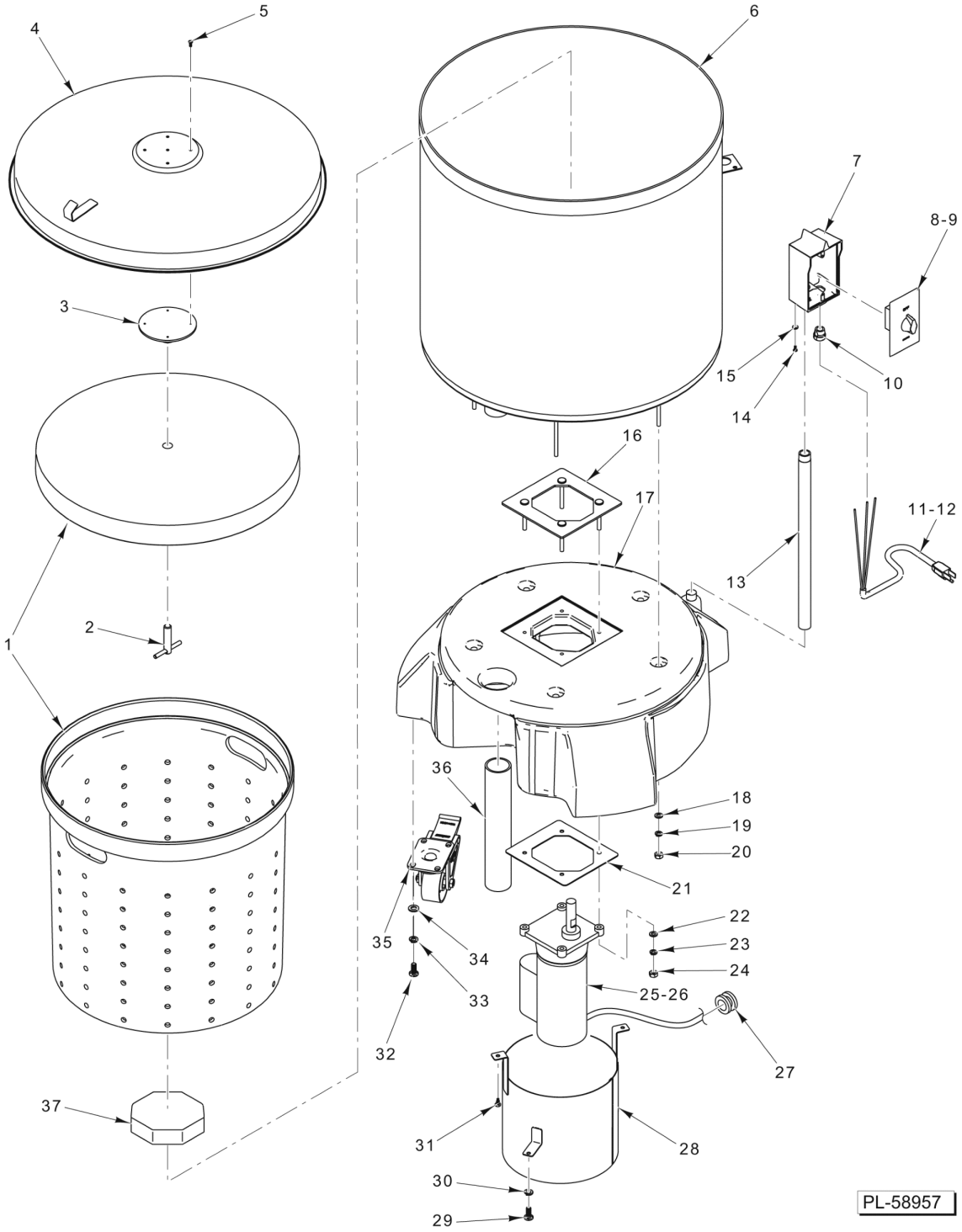

SDPS SALAD DRYER

SDPS SALAD DRYER

ILLUS. PL-58957	PART NO.	NAME OF PART	AMT.
1	01-505009-00001	Basket - Dryer (Incls. Lid)	1
2	01-505006-000PE	T-Handle Assy	1
3	01-505005-000PS	Mount -Bearing	1
4	01-505000-000PS	Lid - Complete Assy. (SST) (With Hook) (Incls. Items 3 & 5)	1
5	01-505004	Screw Slotted Pan Hd	4
6	01-505011-000PS	Shell - Drum (SST)	1
7	01-505034-000PS	Timer Box - Electrical	1
8	01-505037-000PE	Timer - Intermatic (Incls. Knob)	1
9	01-505037-0000C	Cover - Timer	1
10	01-505036-000PE	Bushing - Cable Relief	1
11	01-505039-000PE	Cord - Power Supply (115 V.)	1
12	01-505039-00PEA	Cord - Power Supply (230 V.)	1
13	01-505029-000PS	Conduit - Electrical Pipe	1
14	01-505049-000PE	Screw, 10-24 X 1/2 Cap	3
15	01-505011-0000A	Washer	3
16	01-505017-000PE	Mount -Top Motor	1
17	01-915052	Base - Polyethylene (Grey)	1
18	01-505044-000PS	Washer	10
19	01-505012-00001	Lockwasher	5
20	01-505012-00002	Nut	5
21	01-505017-00BPE	Plate - Motor Mount Bottom	1
22	01-505044-000PS	Washer	8
23	01-505012-00003	Lockwasher	4
24	01-505012-00002	Nut	4
25	01-505026-000PE	Motor - Gear (115 V., 60 Hz., 1 Ph.)	1
26	01-505026-00PEA	Motor - Gear (230 V., 60 Hz., 1 Ph.)	1
	01-505026-00PEB	Motor - Gear (230 V., 50 Hz., 1 Ph.)	1
27	01-505028-000PE	Grommet - Rubber (Not used after Serial Number 311509672)	1
28	01-505022-000PE	Splash Guard - Motor (Not used after Serial Number 311509672)	1
29	01-505012-00004	Mach. Screw Hex Hd	1
30	01-505012-00003	Lockwasher	1
31	01-505034-0000A	Mach. Screw Phil. Pan Hd	2
32	01-505043-000PS	Mach. Screw 8-18 Hex Hd	4
33	01-505012-00003	Lockwasher	4
34	01-505011-0000A	Washer	8
35	01-505042-000PE	Caster	3
36	01-505013-0000A	Drain - Pipe Extension Hose	1
37	01-505027-000PE	Driver - Octagonal (Right-Hand Thread)	1

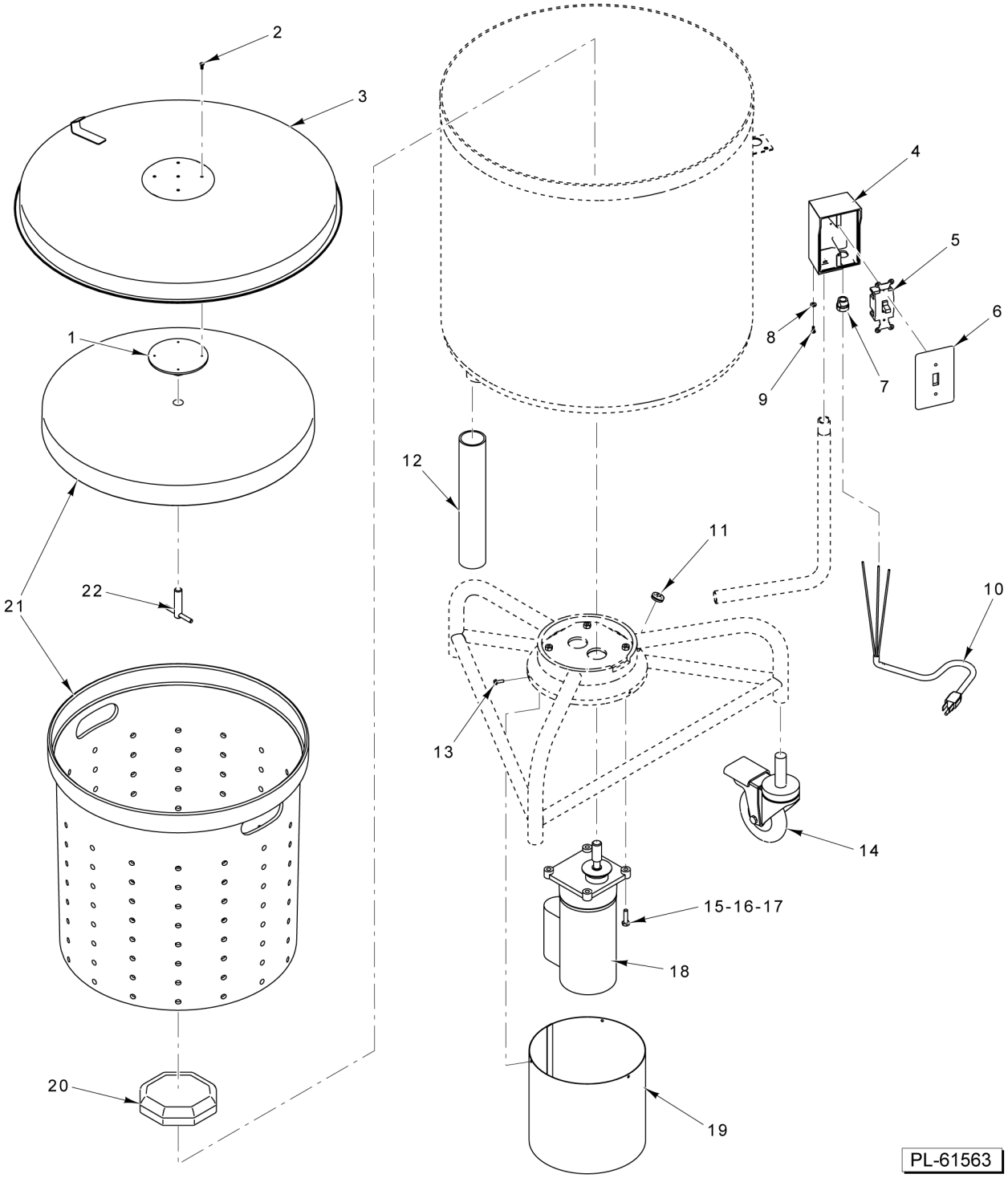

SD97 SALAD DRYER

SD97 SALAD DRYER

ILLUS. PL-61563	PART NO.	NAME OF PART	AMT.
1	01-505005-000PS	Mount -Bearing	1
2	01-505004	Screw Slotted Pan Hd	4
3	01-505000-000PS	Lid - Complete Assy. (SST) (Incls. Items 1 & 2)	1
4	01-915063	Timer Box - Electrical	1
5	00-915036	Switch - On/Off	1
6	00-915037	Cover - Switch	1
7	01-505036-000PE	Bushing - Cable Relief	1
8	01-505011-0000A	Washer	3
9	01-505043-000PS	Mach. Screw 8-18 Hex Hd	3
10	01-505039-000PE	Cord - Power Supply (115 V.)	1
11	01-505028-000PE	Grommet - Rubber	1
12	01-505013-0000A	Drain - Pipe Extension Hose	1
13	SC-129-58	Mach. Screw 8-32 x 1/2 Hex Washer Hd	3
14	01-505042-000SV	Caster	3
15	SC-041-02	Cap Screw 1/4-20 x 1 Hex Hd. (SST)	4
16	01-505012-00001	Lockwasher	4
17	WS-017-08	Washer (0.328 x 0.625 x 0.062) (SST)	4
18	01-505026-000PE	Motor - Gear (115 V., 60 Hz., 1 Ph.)	1
19	01-915058	Splash Guard - Motor	1
20	01-505027-000PE	Driver - Octagonal (Right-Hand Thread)	1
21	01-505009-00001	Basket - Dryer (Incls. Lid)	1
22	01-505006-000PE	T-Handle Assy	1