HOBART

CATALOG OF REPLACEMENT PARTS

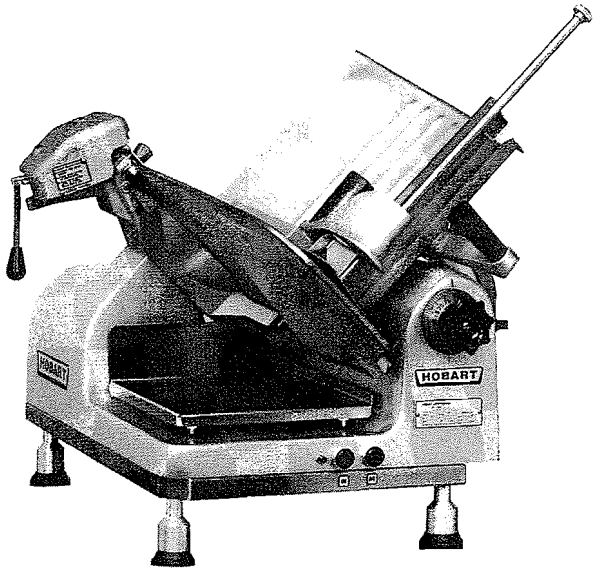

SLICERS

(INCLUDES MOTOR PARTS)

1812PS	ML-104589
1812RS	ML-104590

A product of HOBART CORPORATION 701 RIDGE AVENUE TROY, OHIO 45374-0001

FORM 19423 (10-95)

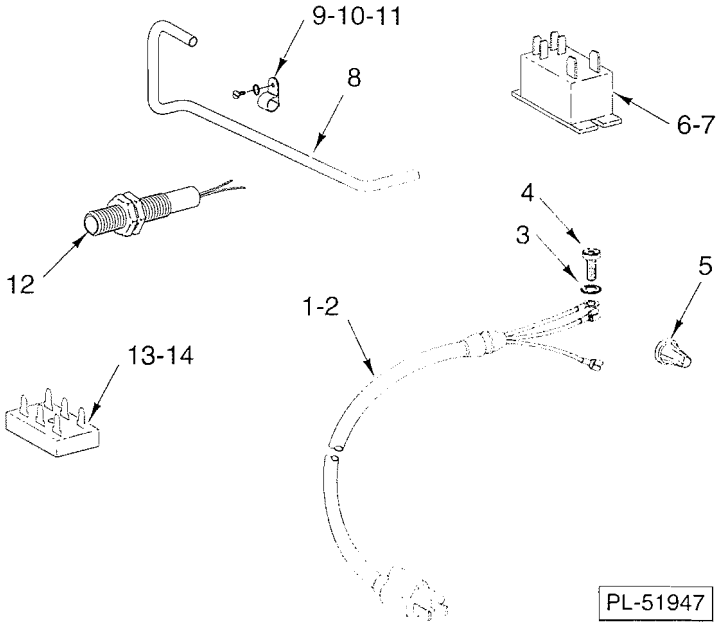

BASE COVER W/ ELECTRICAL COMPONENTS

ILLUS. PL-51947	PART NO.	NAME OF PART	AMT.
1	123856-1	Cord & Plug Assy. (Under 150 V.)	1
2	RR-8-13	Retaining Ring (Use with item 1)	1
3	SD-24-13	Self-Tapping Screw 8-32 x 3/8 Pan Hd., Type TT	1
4	WL-10-1	Lockwasher 8 External Shakeproof	1
5	FE-6-29	Wire Nut (14-22 Ga.)	2
6	SD-12-34	Self-Tapping Screw 8-32 x 5/16 Pan Hd., Type T	2
7	87714-42-1	Relay (2 Pole)(Under 150 V.)	1
8	437635	Conduit (Copper Tubing)	1
9	438015-1	Clamp (Aluminum)	1
10	WL-10-1	Lockwasher 8 External Shakeproof	1
11	SD-24-13	Self-Tapping Screw 8-32 x 3/8 Pan Hd., Type TT	1
12	87711-243-2	Sensor (Home Position and/or Auto Shut-off)	AR
13	87714-39-3	Timer - Relay (Under 150V.)(Auto Shut-off only)	1
14	SD-37-95	Self-Tapping Screw 10-24 x 1 Phil. Pan Hd., Type TT (Auto Shut-off only)	1

© HOBART CORPORATION, 1995

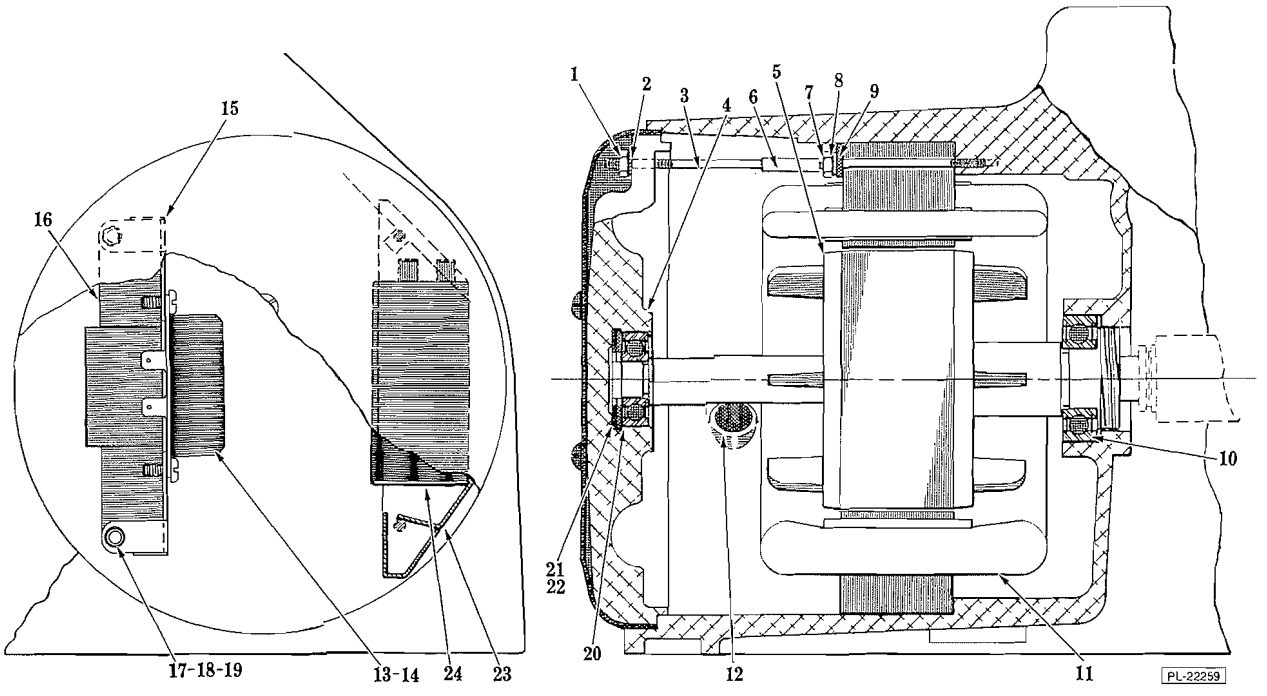

MOTOR PARTS

ILLUS. PL-22259	PART NO.	NAME OF PART	AMT.
1	NS-9-12	Mach. Nut 8-32 Hex	4
2	WL-7-6	Lockwasher 8 External Shakeproof	4
3	120048	Stud - Stator	4
4	110293	Bracket - Bearing	1
5	274761	Rotor	1
6	103661-17	Tubing - Insulator ¾ lg	2
7	NS-9-12	Mach. Nut 8-32 Hex	4
8	WS-2-15	Washer	4
9	293454	Retainer - Stator	4
10	BB-15-41	Ball Bearing - N.D. #Z993L04	1
11	271639	Stator Assy. (All Voltages)	1
12	70418	Bushing - Motor Leads	1
13	271612-2	Switch - Electronic Start (50/60 Hz.)	1
14	SD-24-13	Self-Tapping Screw 8-32 x ⅜ Pan Hd., Type TT	2
15	271613	Plate - Motor Switch	1
16	271614	Insulator - Motor Switch	1
17	103661-15	Tubing - Insulator 1 ½ lg	1
18	WS-2-15	Washer	2
19	NS-9-12	Mach. Nut 8-32 Hex	2
20	BB-18-12	Ball Bearing - Fafnir #P201KDD	1
21	21046-2	Washer - Bumper (1/32 Thk.)	2
22	SL-2-2	Spring - Loading - N.D. #S-12	1
23	278280	Retainer - Capacitor	1
24	70487-21	Capacitor (50/60 Hz.)	1

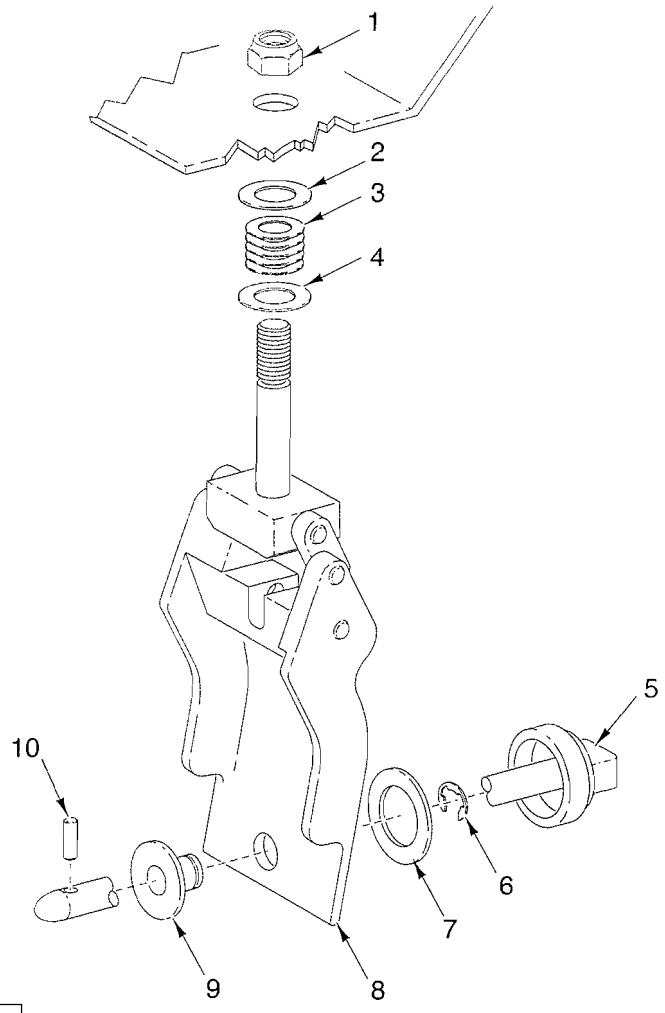

PL-51948

LEVER TRAY UNIT

ILLUS. PL-51948	PART NO.	NAME OF PART	AMT.
1	NS-36-12	Stop Nut ⅜-24 "Elastic"	1
2	WS-21-1	Washer	AR
3	437654	Spring - Belleville	4
4	WS-21-1	Washer	AR
5	437873	Knob & Shaft	1
6	RR-11-3	Retaining Ring	1
7	438138	Washer - Knob Interlock	1
8	438296	Lever - Tray Assy.	1
9	437653	Bushing - Knob	1
10	PG-11-17	Groov Pin ⅛ x 9/16 (SST)	1

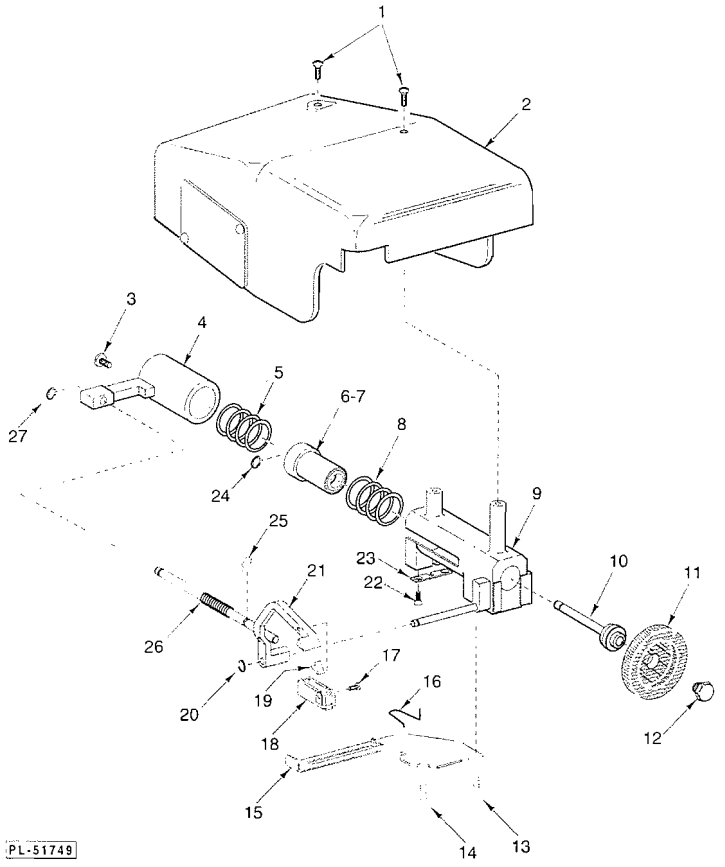

KNIFE SHARPENER UNIT

ILLUS. PL-51749	PART NO.	NAME OF PART	AMT.
1	SC-122-93	Mach. Screw "Special" 10-24 x ½ Phil. Truss Hd.	2
2	438459-1	Plate & Cover Assy.	1
3	SC-122-87	Mach. Screw "Special" 8-32 x ¼ Pan Hd.	1
4	438428-2	Actuator	1
5	438430	Spring - Main	1
6	438464	Plunger & Ball Bearing Assy.(Incls. item 7)	1
7	BB-21-36	Ball Bearing NSK R4BDD	2
8	438437	Spring - Return	1
9	438449	Housing & Stud Assy.	1
10	438417	Shaft - Grinding Wheel	1
11	439691	Stone Service Kit	1
12	435814	Retaining Screw (R.H.)	1
13	438442	Screw - Shoulder "Special"	1
14	SC-122-87	Mach. Screw "Special" 8-32 x ¼ Pan Hd.	1
15	439698	Lever - Locking	1
16	438435	Spring - "U" (Long end inserted into housing)	1
17	SC-122-84	Mach. Screw "Special" 2-56 x 9/16 Pan Hd.	1
18	438466	Stone - Truing	1
19	435324	Spring - Truing Stone	2
20	RR-6-22	Retaining Ring	1
21	438445	Arm - Truing & Pusher Rod Assy.	1
22	SC-122-85	Mach. Screw "Special" 4-40 x ¼ Flat Hd.	2
23	439700	Plate - Rear Locking	1
24	RR-6-22	Retaining Ring	1
25	RR-6-3	Retaining Ring	1
26	438426	Spring - Truing Arm	1
27	RR-6-3	Retaining Ring	1
	438438-1	Sharpener Assy. (Incls. items 1 thru 27)	1

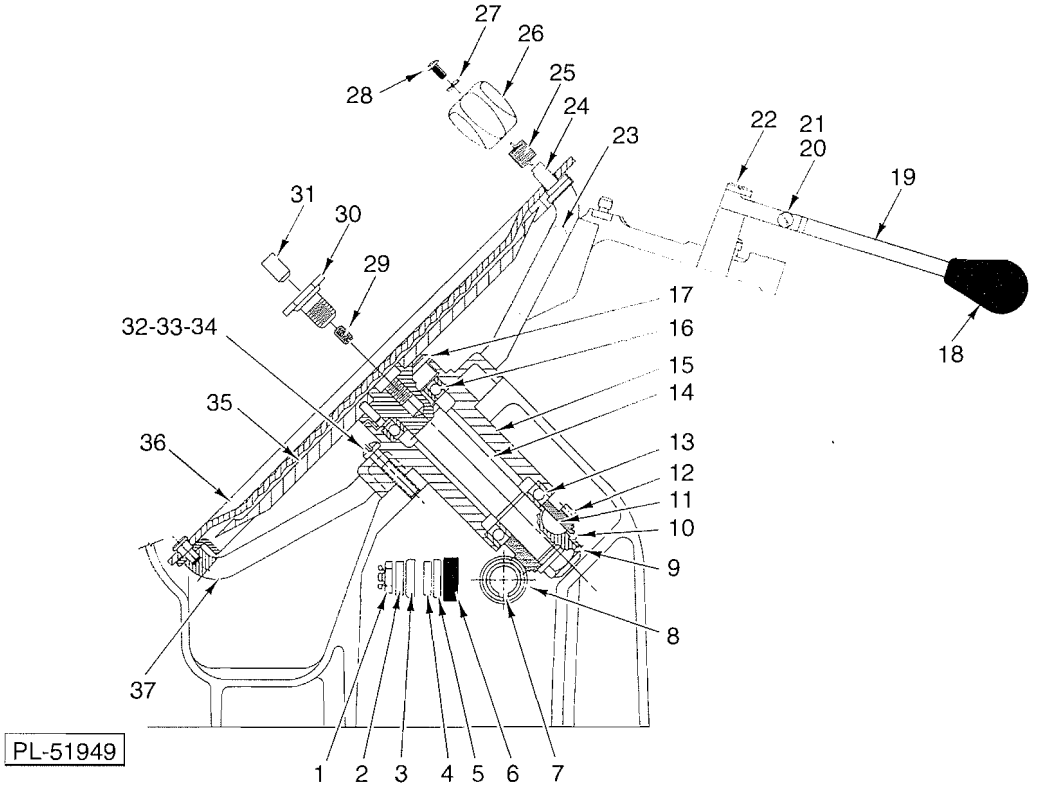
27
26
28
25
24
23
22
21
20
19
31
30
29
17
32-33-34
16
15
18
14
35
13
36
12
11
10
9
8
37
PL-51949
1
2
3
4
5
6
7

KNIFE UNIT

KNIFE UNIT

ILLUS. PL-51949	PART NO.	NAME OF PART	AMT.
1	NS-32-23	Lock Nut 7/16-20 "Flexloc"	1
2	437113	Washer - Special	1
3	WS-7-50	Washer	1
4	274760-1	Washer - Shock (4 1/64 I.D.)	1
5	274759	Retainer - Washer	1
6	70239	Conveyor - Oil	1
7	12430-3	Key 1/8 Sq. X 1 1/8 Lg.	1
8	294193	Worm (4T)(Use with item 15)	1
9	NS-46-29	Lock Nut 3/4-16 Flexlox	1
10	WS-11-46	Washer	1
11	KW-3-10	Key - 606 Woodruff	1
12	274908-1	Gear - Knife Shaft Worm (25T)	1
13	BB-15-8	Ball Bearing MRC 105KSZZ-01-ST-A-92-C	1
14	435785	Knife Shaft & Dowel	1
15	439697-3	Knife Shaft Guard Ring & Hub (Incls. items 9 thru 13,16 & 37)	1
16	BB-15-8	Ball Bearing MRC 105KSZZ-01-ST-A-92-C	1
17	111154	Ring - Knife Shaft	1
18	438420	Knob	1
19	438423	Handle - Cam	1
20	438448	Cam Roller & Rivet Assy.	1
21	SC-122-86	Mach. Screw "Special" 6-32 x 5/8 Pan Hd.	1
22	438455	Shoulder Bolt	1
23	SC-119-55	Mach. Screw 10-24 x 1 Pan Hd.	4
24	437880	Stud - Top Cover Locking	1
25	437994	Spring - Top Cover	1
26	437879	Knob - Top Cover Locking	1
27	WL-13-2	Lockwasher 4 Int. Shakeproof	1
28	SC-122-53	Mach. Screw 4-40 x 5/8 Phil. Pan Hd.	1
29	SC-64-4	Set Screw 1/4-28 x 3/8 Hdls., Flat Pt. "Nylok"	1
30	73356-2	Screw - Knife (Incls. items 29 & 31)	1
31	73265	Plug - Plate Thrust	1
32	SD-37-44	Self-Tapping Screw 1/4-20 x 1 5/8 Pan Hd., Type TT	4
33	WS-22-8	Washer	2
34	435401	Spacer - Deflector Mounting	2
35	439870-1	Knife - Service	1
36	437422	Top Knife Cover Assy. (Packaged)(Incls. items 24 thru 28)	1
37	439696-2	Pin & Ring Guard Assy. (Incls. items 18 thru 23)	1

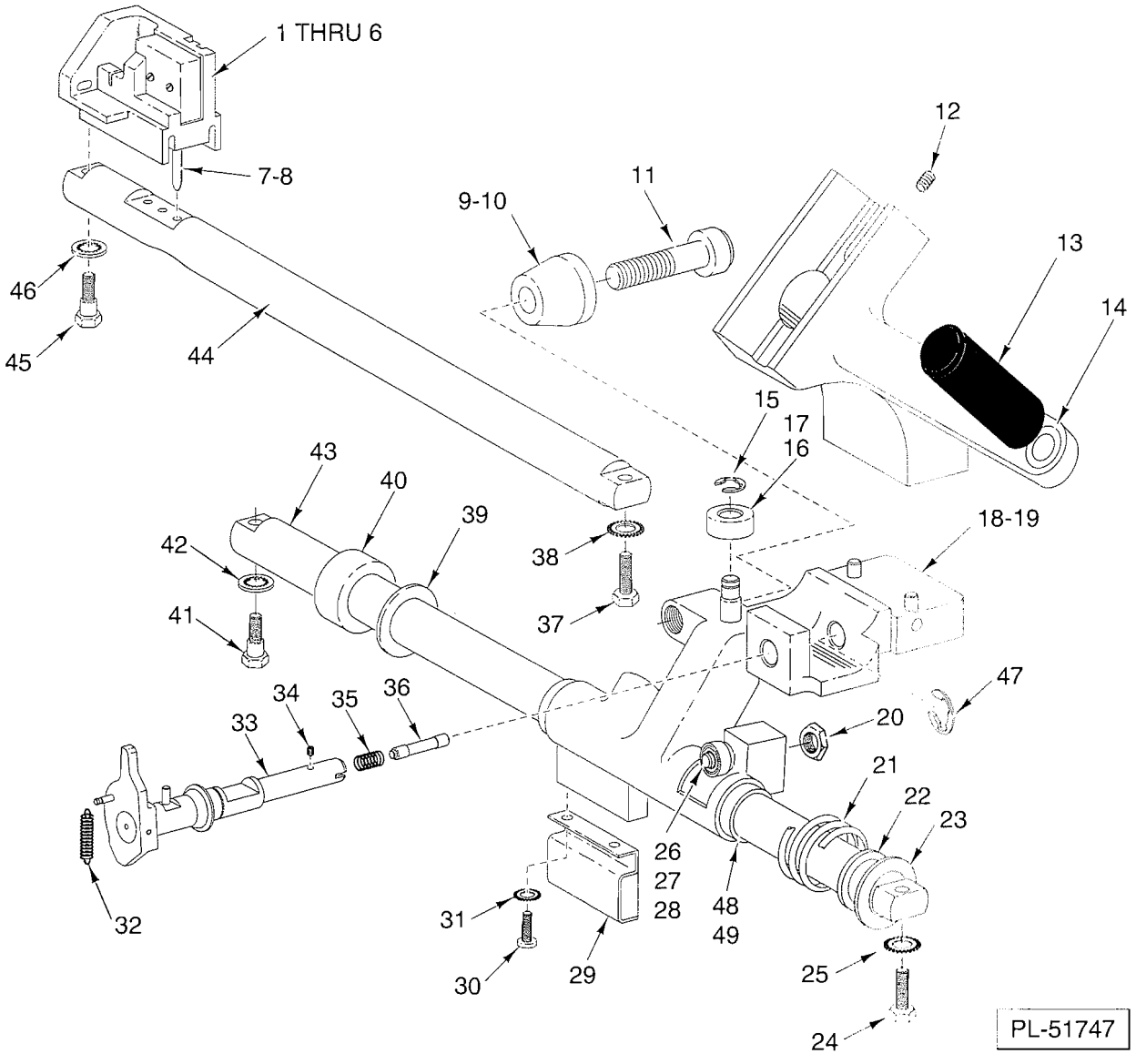

SIDE ROD & BEARING CARRIER UNIT

SIDE ROD & BEARING CARRIER UNIT

ILLUS. PL-51747	PART NO.	NAME OF PART	AMT.
1	87711-242-1	Switch - Lockout	1
2	437632	Bracket - Switch Mounting	1
3	SC-111-4	Mach. Screw 2-56 x 5/8 Rd. Hd. (Mounts switch to bracket)	2
4	NS-46-7	Mach. Nut 2-56 (Mounts switch to bracket)	2
5	WL-8-48	Lockwasher 2 Int. "Shakeproof" (Mounts switch bracket to slide rod)	2
6	SC-93-4	Mach Screw 8-32 x 1/2 Phil. Pan Hd. (Mounts switch bracket to slide rod)	1
7	437637	Spring - Compression	1
8	437634	Plunger	1
9	10928-2	Nut - Special	1
10	274899	Roller - Horizontal	1
11	274898	Stud - Horizontal Roller	1
12	SC-118-52	Set Screw 1/4-20 x 1/2 Hdls. Cup Pt.	1
13	70194	Handle - Gauge Plate	1
14	88749-3	Carriage Support & Plug Assy.(Incls. items 12 & 13)	1
15	RR-9-15	Retaining Ring	1
16	274897	Roller - Vertical	1
17	BB-4-11	Ball Bearing - Hoover #626ZZ	1
18	437877	Carriage Bearing Assy.(Incls. items 20, 26, 27, 28 & 48)	1
19	274895	Wick - Carriage Bearing	1
20	10928-2	Nut - Special	1
21	274903	Spring - Carriage Bearing	2
22	435707	Washer - Bumper (Rubber)	1
23	435708	Washer - Backup (SST)	1
24	SC-41-15	Cap Screw 5/16-18 x 1 1/4 Hex Hd.	1
25	WL-7-20	Lockwasher 5/16 Ext. "Shakeproof"	1
26	109870	Stud - Eccentric	1
27	BB-4-11	Ball Bearing - Hoover #626ZZ	1
28	RR-9-15	Retaining Ring	1
29	438701	Magnet Housing Assy.	1
30	WL-13-8	Lockwasher 8 Internal Shakeproof	2
31	SC-25-26	Mach. Screw 8-32 x 3/8 Bdg. Hd.(Mounts switch to bracket)	2
32	437642	Spring - Extension	1
33	438295	Shaft - Lock Assy.	1
34	SC-116-81	Set Screw 8-32 x 3/16 Soc. Hdls., Cup Pt.	1
35	437641	Spring - Compression	1
36	437640	Plunger - Shaft	1
37	SC-41-15	Cap Screw 5/16-18 x 1 1/4 Hex Hd.	1
38	WL-7-20	Lockwasher 5/16 Ext. "Shakeproof"	1
39	435707	Washer - Bumper (Rubber)	1
40	437630	Spacer	1
41	437778	Screw - Shoulder	1
42	WL-8-27	Lockwasher 3/8 Internal Shakeproof	1
43	437837	Slide Rod - Lower	1
44	437629	Slide Rod - Upper	1
45	437778	Screw - Shoulder	1
46	WL-8-27	Lockwasher 3/8 Internal Shakeproof	1
47	RR-11-94	Retaining Ring	1
48	437610	Bushing - Nyliner (Incls. item 49)	2
49	437612	Liner - Bushing	2
	86262	Eccentric Stud, Bearing & Nut Assy.(Incls. items 20, 26, 27 & 28)	1

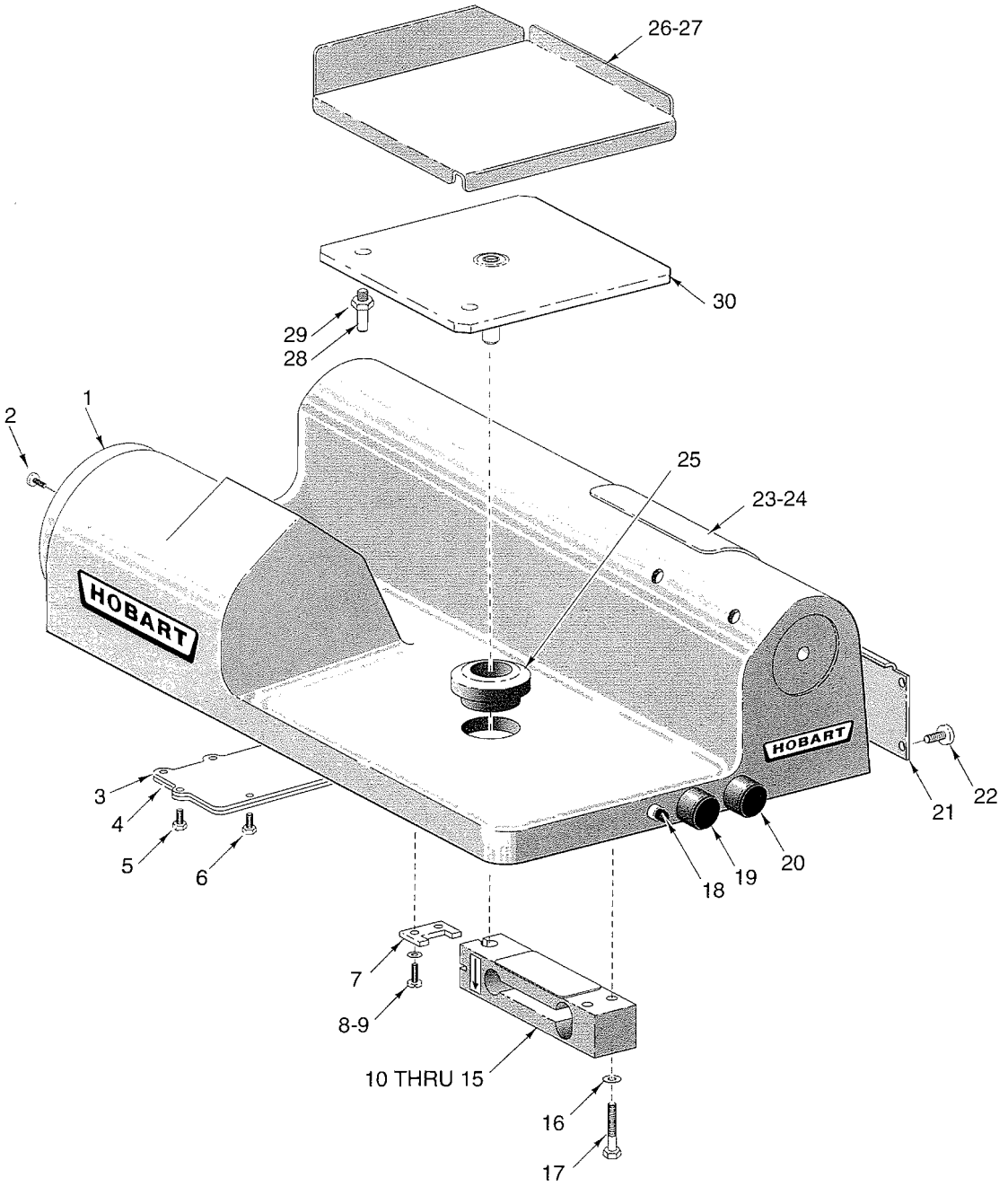

PL-51950

BASE UNIT

BASE UNIT

ILLUS. PL-51950	PART NO.	NAME OF PART	AMT.
1	70238	Cover - Bearing Bracket	1
2	SD-24-19	Self-Tapping Screw 8-32 x 3/8 Truss Hd., Type TT	2
3	117710	Gasket - Gear Case Cover	1
4	116670	Cover - Gear Case	1
5	SD-24-4	Self-Tapping Screw 10-24 x 5/8 Hex Hd., Type TT	5
6	SD-24-5	Self-Tapping Screw 5/16-18 x 5/8 Hex Hd., Type TT	2
7	439370	Plate - Loadcell Stop	1
8	SC-21-15	Mach. Screw 8-32 x 1/2 Rd Hd, Slotted	2
9	WL-13-8	Lockwasher 8 Internal Shakeproof	2
10	439359	Loadcell	1
11	477083-1	Shim - Loadcell (.002 Thk.)	AR
12	477083-2	Shim - Loadcell (.005 Thk.)	AR
13	477083-3	Shim - Loadcell (.010 Thk.)	AR
14	477083-4	Shim - Loadcell (.020 Thk.)	AR
15	439388	Gasket - Load Cell	1
16	WL-13-14	Lockwasher 1/4 Internal Shakeproof	2
17	SC-41-6	Cap Screw 1/4-20 x 1 1/4 Hex Hd	2
18	294700-4-1	Pilot Light	1
19	87711-258	Switch - Push Button (On)	1
20	87711-257	Switch - Push Button (Off)	1
21	274902	Panel - Side	1
22	SC-10-32	Mach. Screw 8-32 x 3/8 Truss Hd.	4
23	438169	Access Cover - Slide Rods	1
24	SD-37-77	Self-Tapping Screw 6-32 x 3/8 Truss Hd., Type T	4
25	439364	Nut-Hump	1
26	477103	Platter - Scale (Incls. item 27)	1
27	439986	Pad-Rubber (Platter)	4
28	439966	Set Screw (Adjustable)	2
29	439968	Nut-Plastic Lock	2
30	439936	Platter Assy. (Incls. items 28 & 29)	1

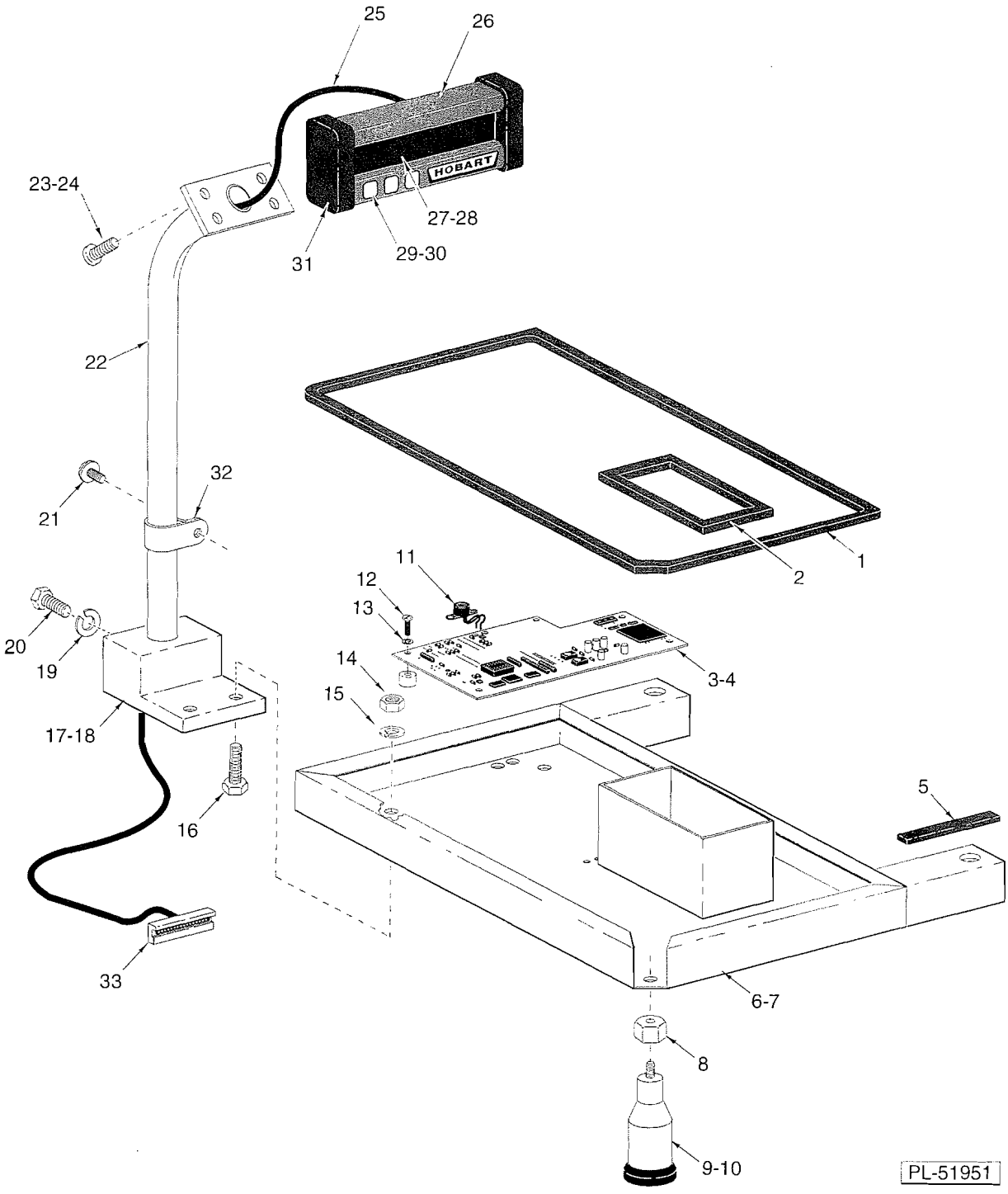

DISPLAY TOWEL & BASE COVER

DISPLAY TOWEL & BASE COVER

ILLUS. PL-51951	PART NO.	NAME OF PART	AMT.
1	477047	Gasket - Bottom Cover	1
2	439388	Gasket - Load Cell	1
3	439876	Board - Printed Circuit	1
4	477052	Insulator - PCB	1
5	477048	Gasket - Leg	2
6	439381-1	Cover Assy. (ML-104589)	1
7	439381-2	Cover Assy. (ML-104590)	1
8	477125	Cap - Leg (ML-104590)	4
9	439517	Leg	4
10	83681	Foot	4
11	438488	Buzzer	1
12	SC-21-1	Mach. Screw 4-40 x ¼ Rd. Hd.	7
13	WL-13-2	Lockwasher 4 Int. Shakeproof	7
14	NS-18-1	Jam Nut ¼-20 Hex (ML-104589)	2
15	WL-13-14	Lockwasher ¼ Internal Shakeproof (ML-104589)	2
16	SC-109-47	Cap Screw ¼-20 x ⅞ Hex Hd. (ML-104589)	2
17	439380	Block - Mounting (ML-104589)	1
18	SC-55-21	Set Screw 8-32 x ⅜ Hdls. Cup Pt. (ML-104589)	1
19	WL-13-14	Lockwasher ¼ Internal (ML-104589)	2
20	SC-119-33	Mach. Screw ¼ - 20 x 2 ½ Hex Hd. (ML-104589)	2
21	SD-24-19	Self-Tapping Screw 8-32 x ⅜ Truss Hd., Type TT	AR
22	439953	Tube Assy. Plate (ML-104589)	1
23	SC-26-2	Mach. Screw 8-32 x ⅜ Phil Bind. Hd. (ML-104589)	1
24	WL-13-8	Lockwasher 8 Internal Shakeproof (ML-104589)	4
25	477118	Kit - Display Cable (ML-104589)	4
26	477105	Extrusion - Display Housing (ML-104589)	1
27	439377	Filter - Display (ML-104589)	1
28	439373	Button - Keypad (ML-104589)	4
29	439376	Overlay - Keypad Display (ML-104589)	1
30	477104	Overlay - Keypad Display (KG)(ML-104589)	1
31	439368	Cap - Display End (ML-104589)	2
32	439977	Clamp - Electrical (ML-104589)	1
33	439976	Connector (14 Pin Female)(ML-104589)	1
	439948	Cable - Load Cell Extension (ML-104590)	1
	477106	Kit - Display Board (Incls. items 29 & 30)(MI-104589)	1
	477107	Kit - Display Board (KG Upgrade)(Incls. items 28 & 30)	1
	439978	Label - Tamper Proof	1

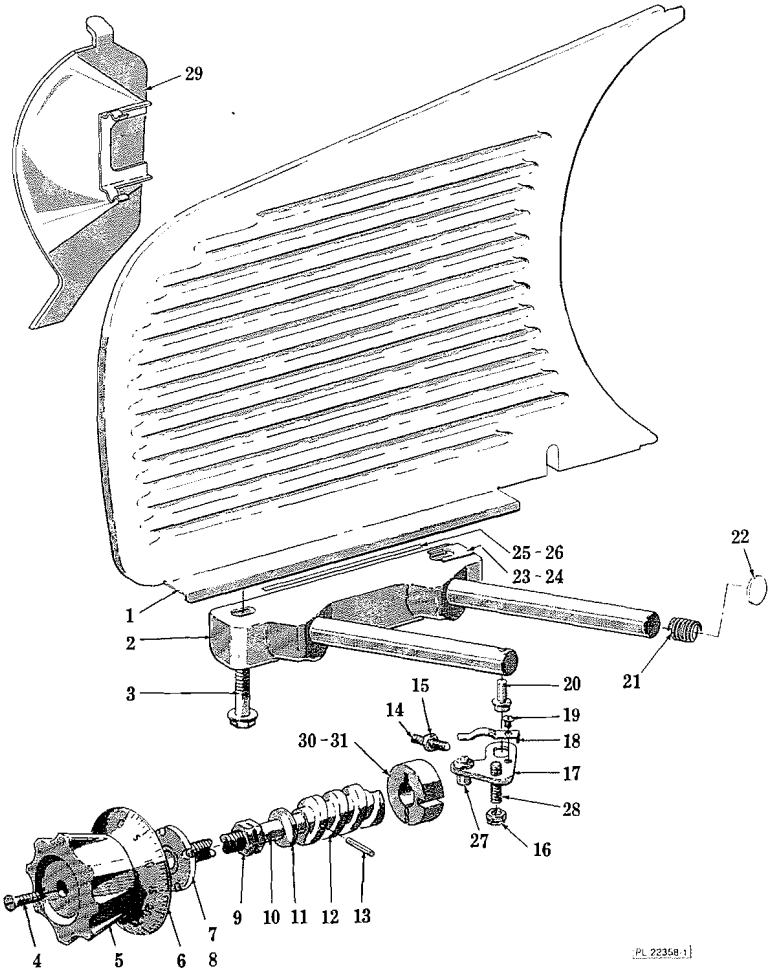

GAUGE PLATE & INDEXING MECH.

GAUGE PLATE & INDEXING MECH.

ILLUS. PL-22358-1	PART NO.	NAME OF PART	AMT.
1	124768	Gauge Plate Unit	1
2	274989-2	Gauge Plate Support & Slide Rod Assy.	1
3	112913	Screw - Special	2
4	SC-23-10	Mach. Screw 10-24 x ¾ Oval Hd.	1
5	114214	Cap - Index Knob	1
6	118175	Dial Assy	1
7	76948	Disc. - Indexing Drive	1
8	RP-2-40	Roll Pin 3/32 Dia. x ¾ Lg.	1
9	10928-2	Nut - Special	2
10	437626	Shaft - Indexing	1
11	88298	Washer - Belleville	2
12	87495	Worm - Indexing	1
13	RP-3-1	Roll Pin 5/32 Dia. x ⅝ Lg.	1
14	SC-63-28	Set Screw ¼-20 x 1 Hdls., Flat Pt.	1
15	NS-17-1	Jam Nut ¼-20 Hex	1
16	NS-32-12	Stop Nut 5/16-18 "Flexloc"	1
17	437213	Indexing Plate Assy.(Incls. items 18, 19, 27 & 28)	1
18	437212	Spring - Indexing Plate	1
19	SC-8-14	Mach. Screw 10-32 x 3/16 Rd. Hd.	1
20	70343	Roller - Indexing Plate (Straight)	1
21	274906	Spring - Gage Plate	1
22	76952	Plug - Expansion	1
23	291171-1	Spacer - Gauge Plate Sprocket (.005 Thk.)	1
24	291171-2	Spacer - Gauge Plate Sprocket (.005 Thk.)	3
25	122559	Shim (Specify Dash #: -1 = .0075 Thk.; -2 = .010 Thk. & -3 = .0125 Thk.)	AR
26	122573	Shim (Specify Dash #: -1 = .002 Thk.; -2 = .003 Thk.; -3 = .004 Thk.; -4 = .005 Thk.)	AR
27	70342	Roller - Indexing	1
28	291569	Stud - Collar Assy	1
29	274911	Deflector	1
30	437627	Collar (Incls. item 31)	1
31	438356	Screw - Indexing Collar	1
	437989	Indexing Shaft & Worm Assy.(Incls. items 10, 12 & 13)	1

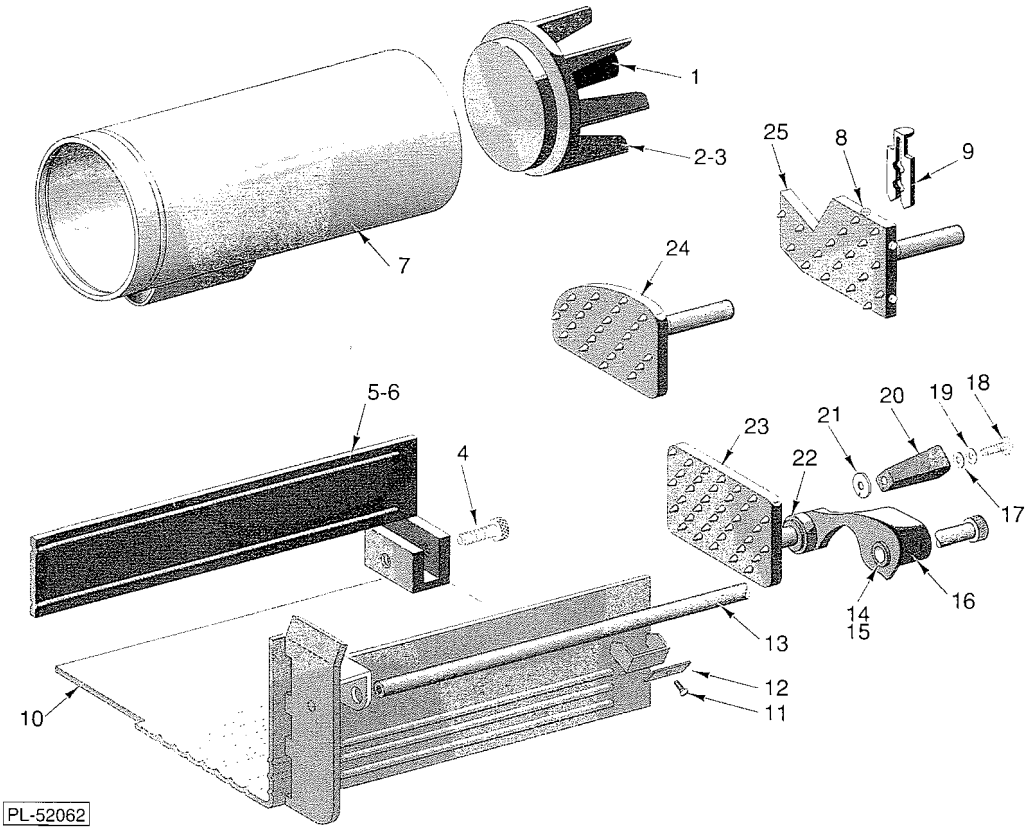

CARRIAGE TRAY UNIT

ILLUS. PL-52062	PART NO.	NAME OF PART	AMT.
* 1	70194	Handle - Gauge Plate	1
* 2	75930	Plate - Pusher	1
* 3	75945	Pusher Plate & Handle Assy. (Incls. items 1 & 2)	1
4	290984	Thumb Screw - Fence	1
5	295118	Fence & Thumb Screw Assy. (Packaged)(Incls. item 4)(SST)	1
6	295117	High Fence & Thumb Screw Assy. (Horizontal Carriage Tray)(Incls. item 4)(SST)	1
* 7	118332-1	Tube & Angled Seat Assy	1
8	70360-1	Button - Plastic	5
9	70341	Meat Holder - Meat Grip	1
10	437115-1	Carriage Tray Assy. (SST)(Incls. item 13)	1
11	SC-8-9	Mach. Screw 10-24 x ⅜ Rd. Hd.	2
12	72579	Clip - Meat Grip Retaining	1
13	435949	Shaft - Knob Assy.	1
14	437124	Bearing - Meat Grip Arm	2
15	WS-21-19	Washer	AR
16	437987	Meat Grip Arm & Bearing Assy. (Incls. item 14)	1
17	70344	Washer - Handle Tension	1
18	68042	Screw - Truss Hd. "Nylok"	1
19	70345	Washer - Handle Retaining	1
20	70202	Handle - Meat Grip (Non-Metallic)	1
21	437006	Washer - Handle	1
22	437007	Washer	1
23	437908	Meat Grip Assy. (Standard)	1
24	438175	Meat Grip Assy. (Light Weight)(Packaged)	1
25	438176	Meat Grip Assy. (Heavy)(Packaged)(Incls. items 8 & 9)	1
	437912-2	Meat Grip Assy. & Arm Assy. (Standard)(Incls. items 17 thru 23)	1

* Attachment Chute (Special, used in place of carriage)