HOBART

CATALOG OF

REPLACEMENT PARTS



SLICERS

(INCLUDES MOTOR PARTS)

2612	**ML-104952**
2612C	**ML-104954**

A product of HOBART CORPORATION 701 S. RIDGE AVENUE TROY, OHIO 45374-0001

FORM 34648 (Apr. 2001)

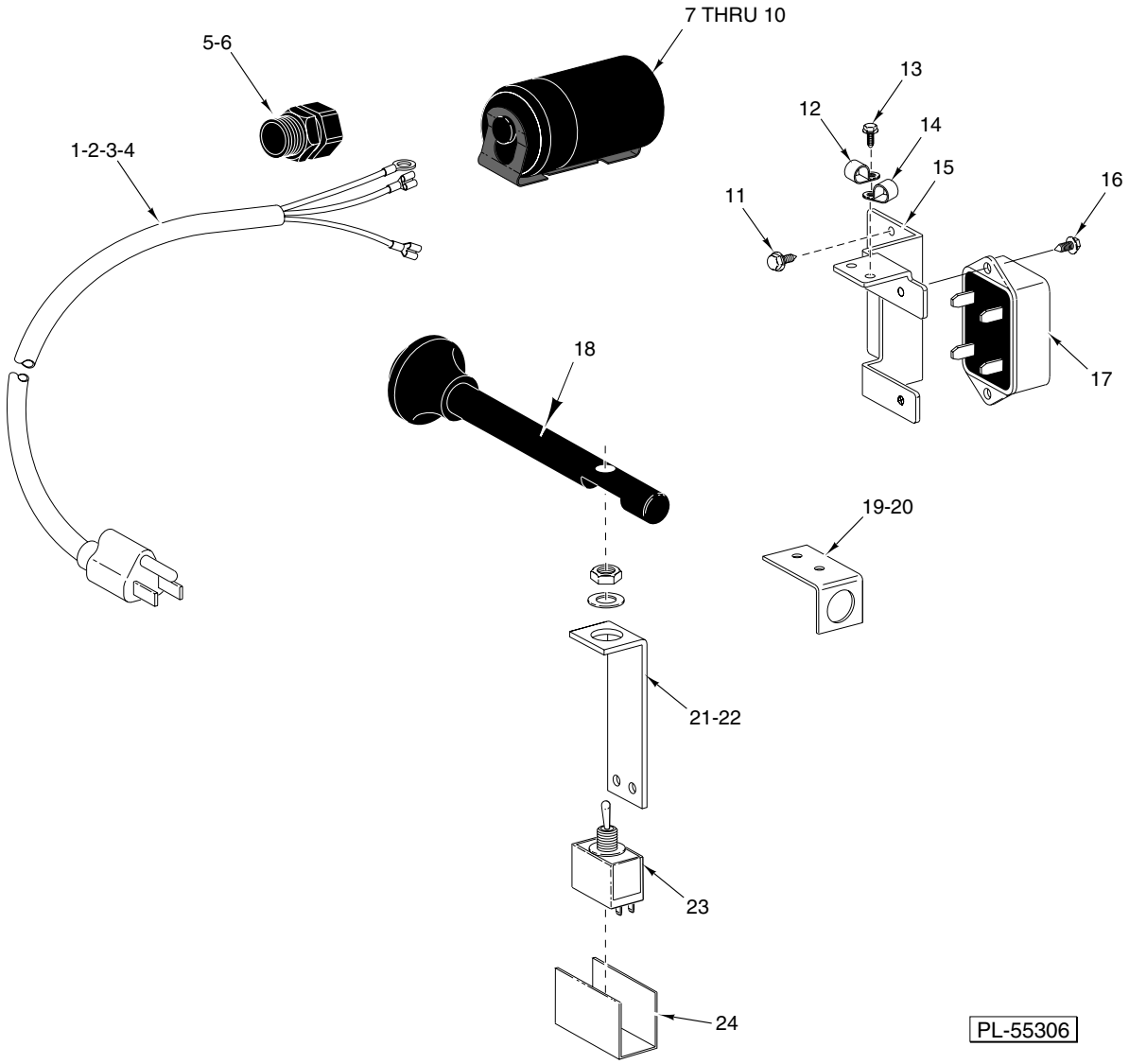

ELECTRICAL UNIT

© HOBART CORPORATION

ELECTRICAL UNIT

ILLUS. PL-55306	PART NO.	NAME OF PART	AMT.
1	00-117542-00084	Cord & Plug Assy. (100/120 V.)	1
2	00-117542-00085	Cord & Plug Assy. (240 V.)	1
3	00-117542-00039	Cord Assy (I.E.C.)	1
4	SD-015-41	Self-Tapping Screw 8-32 x 1/2 Phil. Pan Hd., Type TT	1
5	FE-021-21	Connector – Strain Relief	1
6	WL-010-01	Lockwasher #8 External Shakeproof	1
7	00-070486-00001	End Cap – Capacitor	1
8	00-070487-00021	Capacitor (50/60 Hz.)	1
9	00-066621-00003	Bracket – Capacitor	1
10	SD-024-16	Self-Tapping Screw 10-24 x 1/2 Phil. Flat Hd., Type TT	1
11	SD-015-41	Self-Tapping Screw 8-32 x 1/2 Phil. Pan Hd., Type TT	2
12	00-438132-00001	Clamp – 5/16 "P"	1
13	SD-038-16	Self-Tapping Screw 6-32 x 3/8 Hex Washer Hd., Type RL	1
14	00-078752-00012	Clamp – Cable	1
15	00-438929	Bracket – Motor Start Switch (Incls. Items 17 & 18)	1
16	SD-015-38	Self-Tapping Screw 6-32 x 3/8 Phil. Pan Hd., Type TT	2
17	00-271612-00002	Switch – Electronic Start (50/60 Hz.)	1
18	00-439043	Knob – ON/OFF	1
19	00-439041	Bracket – Switch Rod	1
20	SD-038-16	Self-Tapping Screw 6-32 x 3/8 Hex Washer Hd., Type RL	2
21	00-439040	Bracket – ON/OFF Switch	1
22	SD-038-16	Self-Tapping Screw 6-32 x 3/8 Hex Washer Hd., Type RL	2
23	00-087711-148-1	Switch (With Nuts)	1
24	00-873803	Switch – Mylar	1
	00-477325-00001	Harness – Wiring	1
	00-477614	Wire – Bundle	1
	00-065890-00085	Line – Splice	2
	00-065890-00029	Connector – Insulated	AR

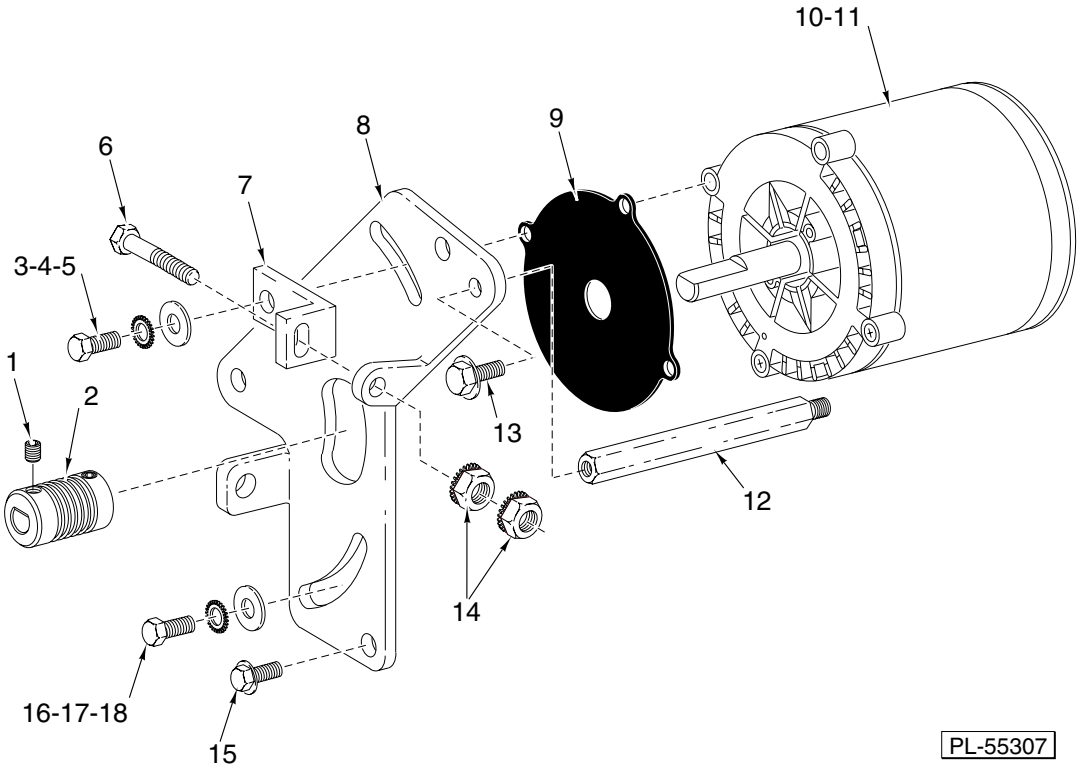

DRIVE MOTOR UNIT

DRIVE MOTOR UNIT

ILLUS. PL-55307	PART NO.	NAME OF PART	AMT.
1	SC-123-65	Set Screw Special 1/4-28 x 3/8 Hdls., Flat Pt.	2
2	00-438844-00002	Sheave – Poly "V"	1
3	SC-037-73	Cap Screw 3/8-16 x 1 Hex Hd.	2
4	WL-007-25	Lockwasher 3/8 External	2
5	WS-018-22	Washer	2
6	SC-118-98	Cap Screw 1/4-20 x 2 Hex Hd.	1
7	00-477532	Bracket – Tensioner Adjustment	1
8	00-477760	Plate – Motor	1
9	00-439032	Gasket – Motor	1
10	00-438846-00001	Motor (60 Hz.)	1
11	00-438846-00002	Motor (50 Hz.)	1
12	00-438984	Standoff	1
13	SC-041-01	Cap Screw 1/4-20 x 3/4 Hex Hd. (SST)	1
14	NS-044-14	Nut – 1/4-20 Hex "Keps"	2
15	SD-038-18	Self-Tapping Screw 5/16-18 x 3/4 Hex Washer Hd., Type RL	3
16	SC-037-73	Cap Screw 3/8-16 x 1 Hex Hd.	1
17	WL-007-25	Lockwasher 3/8 External	1
18	WS-018-22	Washer	1

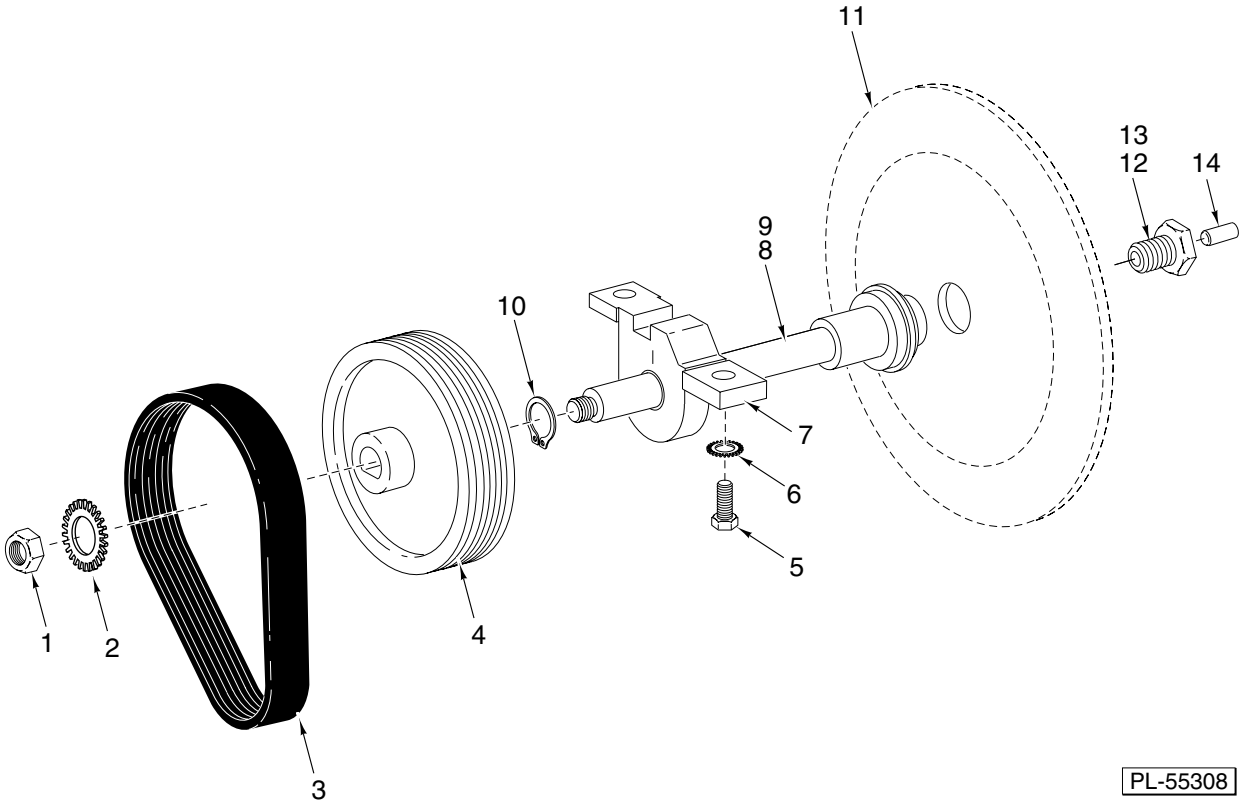

KNIFE SHAFT UNIT

ILLUS. PL-55308	PART NO.	NAME OF PART	AMT.
1	NS-017-41	Nut – Jam 5/8-18 Hex	1
2	WL-004-17	Lockwasher 5/8 Light	1
3	00-438845	Belt – Poly "V"	1
4	00-439049	Sheave – Poly "V" Large 6 Groove	1
5	SC-037-73	Cap Screw 3/8-16 x 1 Hex Hd.	2
6	WL-007-25	Lockwasher 3/8 External	2
7	00-875180-00002	Retainer – Lower Hub & Bearing (Incls. Item 8)	1
8	BB-015-08	Ball Bearing	1
9	00-438915-00002	Shaft – Knife	1
10	RR-009-07	Retaining Ring	1
11	00-439870-00004	Knife (Packaged)	1
12	00-073356-00002	Screw – Knife (Incls. Items 13 & 14)	1
13	SC-064-04	Set Screw 1/4-28 x 3/8 Hdls., Flat Pt. "Nylok"	1
14	00-073265	Plug – Plate Thrust	1

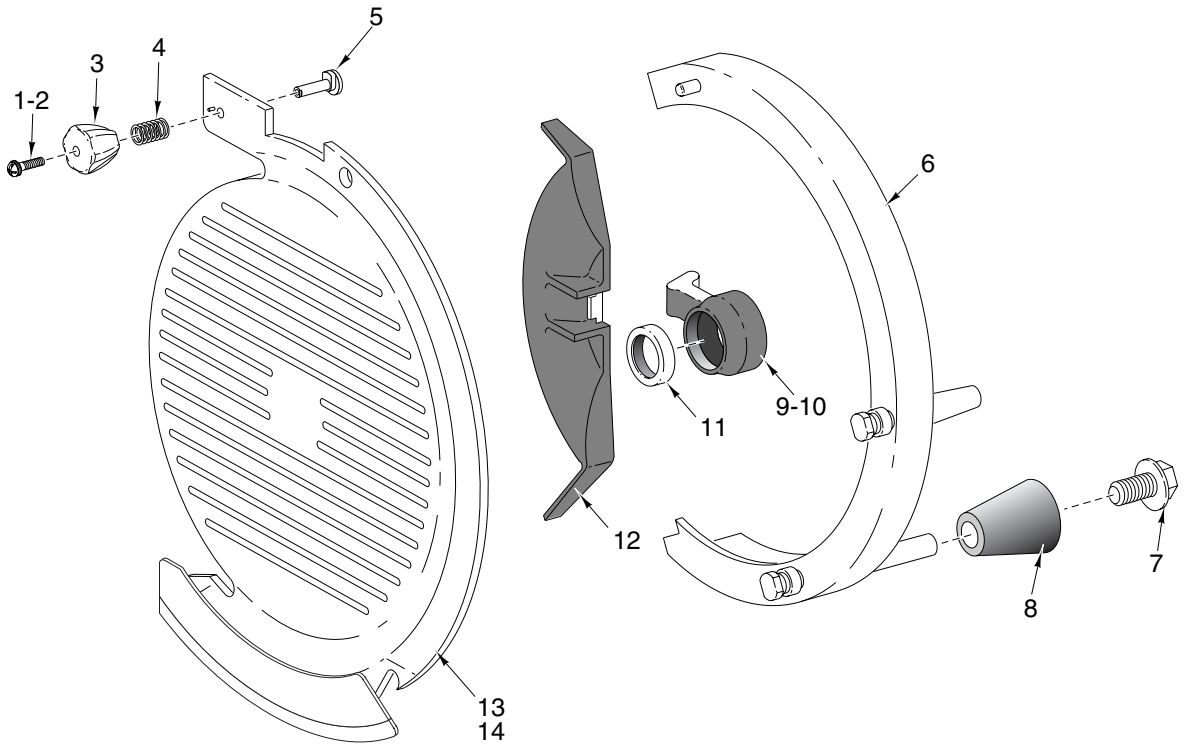

PL-55309

TOP COVER & LOCK KNOB UNIT

ILLUS. PL-55309	PART NO.	NAME OF PART	AMT.
1	SC-122-53	Mach. Screw 4-40 x 5/8 Phil. Pan Hd.	1
2	WL-013-02	Lockwasher #4 Internal Shakeproof	1
3	00-875266	Knob – Locking, Top Cover	1
4	00-437994	Spring – Top Cover	1
5	00-875265	Stud – Locking, Top Cover	1
6	00-438920-00002	Guard – Knife Ring	1
7	SD-038-14	Self-Tapping Screw 1/4-20 x 7/8 Hex Washer Hd., Type RL	2
8	00-438975	Ferrule – Ring Guard	2
9	00-438974	Mount – Deflector	1
10	SD-038-19	Self-Tapping Screw 8-18 x 3/8 Hex Washer Hd.	3
11	00-439015	Knife Shaft Ring	1
12	00-478289	Product Deflector	1
13	00-479740	Cover – Top & Lock Knob Assy.	1
14	00-873830-00002	Cover – Top & Lock Knob Assy. (2612C Only)	1

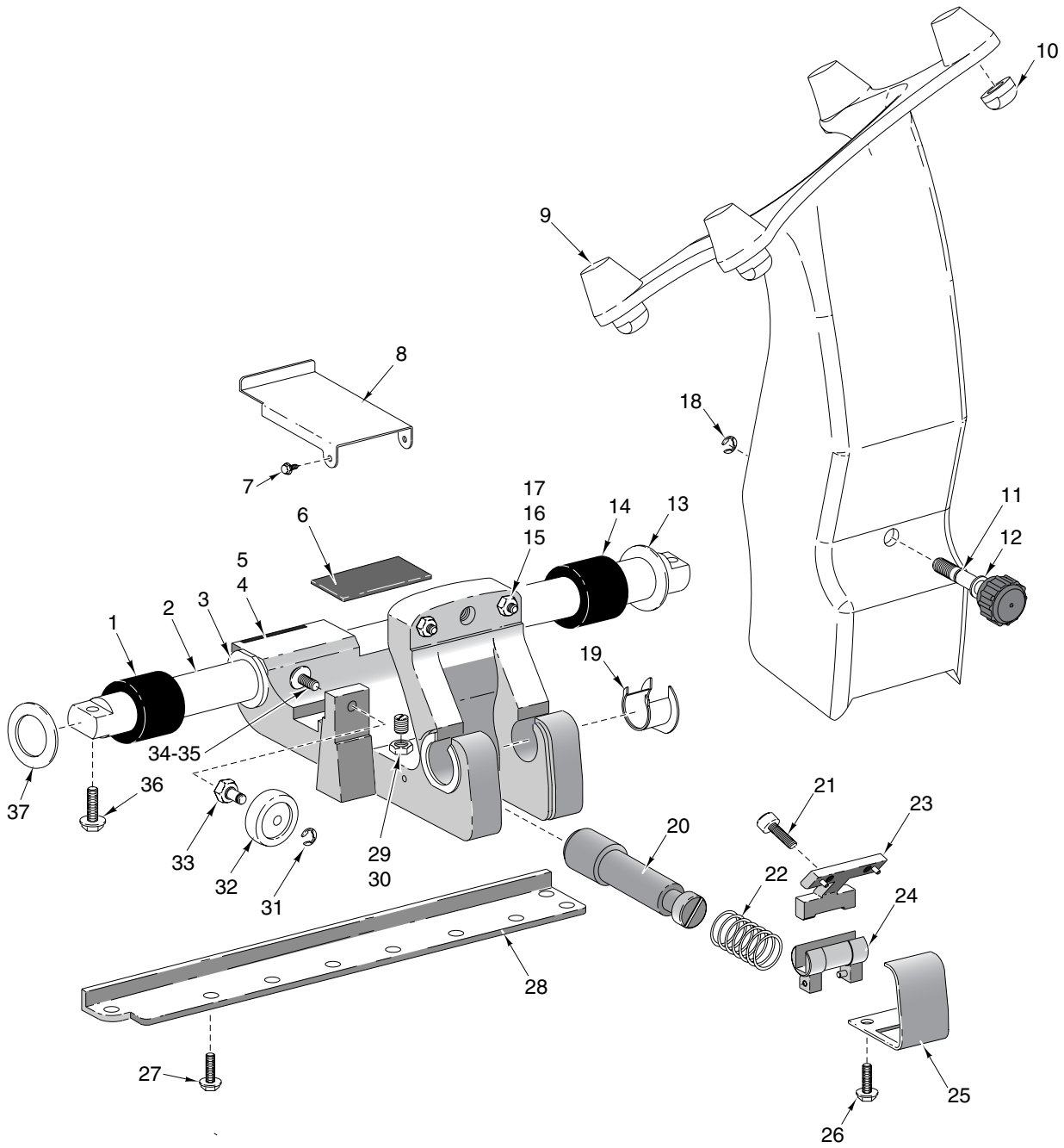

PL-55310

TRANSPORT CARRIAGE UNIT

TRANSPORT CARRIAGE UNIT

ILLUS. PL-55310	PART NO.	NAME OF PART	AMT.
1	00-477555	Bumper – Slide Rod	1
2	00-438907	Slide – Rod	1
3	00-439007	Bearing – Transport	2
4	00-479690	Transport Carriage Assy. (Incls. Items 15, 16, & 17)	1
5	00-439064	Magnet – Transport	1
6	00-439017	Wick – Slide Rod Lubrication	1
7	SD-038-16	Self-Tapping Screw 6-32 x 3/8 Hex Washer Hd., Type RL	1
8	00-478424	Cover – Interlock	1
9	00-479676-00002	Arm – Meat Tray Support	1
10	00-875039	Nut – Carriage Tray	4
11	00-477534	Knob Assy.	1
12	00-478021	Washer – Belleville	4
13	00-435708	Washer – Backup (SST)	2
14	00-477555	Bumper – Slide Rod	1
15	SC-123-79	Set Screw 5/16-18 x 1	2
16	NS-018-06	Jam Nut 5/16-18 Hex	2
17	00-535871	Insert – Screw	2
18	RR-006-21	Retaining Ring	1
19	00-439006	Bearing – Pivot	2
20	00-478298	Shaft – Pivot Return	1
21	SC-123-08	Cap Screw 1/4-20 x 5/8 Soc. Hd.	2
22	00-438902	Spring – Interlock Bar	1
23	00-873535-00002	Plate – Key	1
24	00-873534-00002	Pivot – Tiltable Carrier	1
25	00-438900	Cover – Transport	1
26	SD-038-16	Self-Tapping Screw 6-32 x 3/8 Hex Washer Hd., Type RL	2
27	SD-038-22	Self-Tapping Screw 10-24 x 1/2 Hex Washer Hd., Type RL	9
28	00-438908	Bar – Transport Roller	1
29	00-477747	Set Screw – Special	1
30	NS-017-20	Jam Nut 3/8-24 Hex	1
31	RR-006-23	Ring – Retaining	1
32	00-478420	Roller – Transport	1
33	00-438911	Screw – Adjusting	1
34	WS-003-49	Washer	1
35	SC-123-56	Mach. Screw – Special 1/4-28 x 1/2 Button Hd.	1
36	SD-033-08	Self-Tapping Screw 5/16-18 x 1 Hex Washer Hd., Type TT	2
37	00-435708	Washer – Backup (SST)	1
	00-873608-00002	Support – Tray Assy.	1

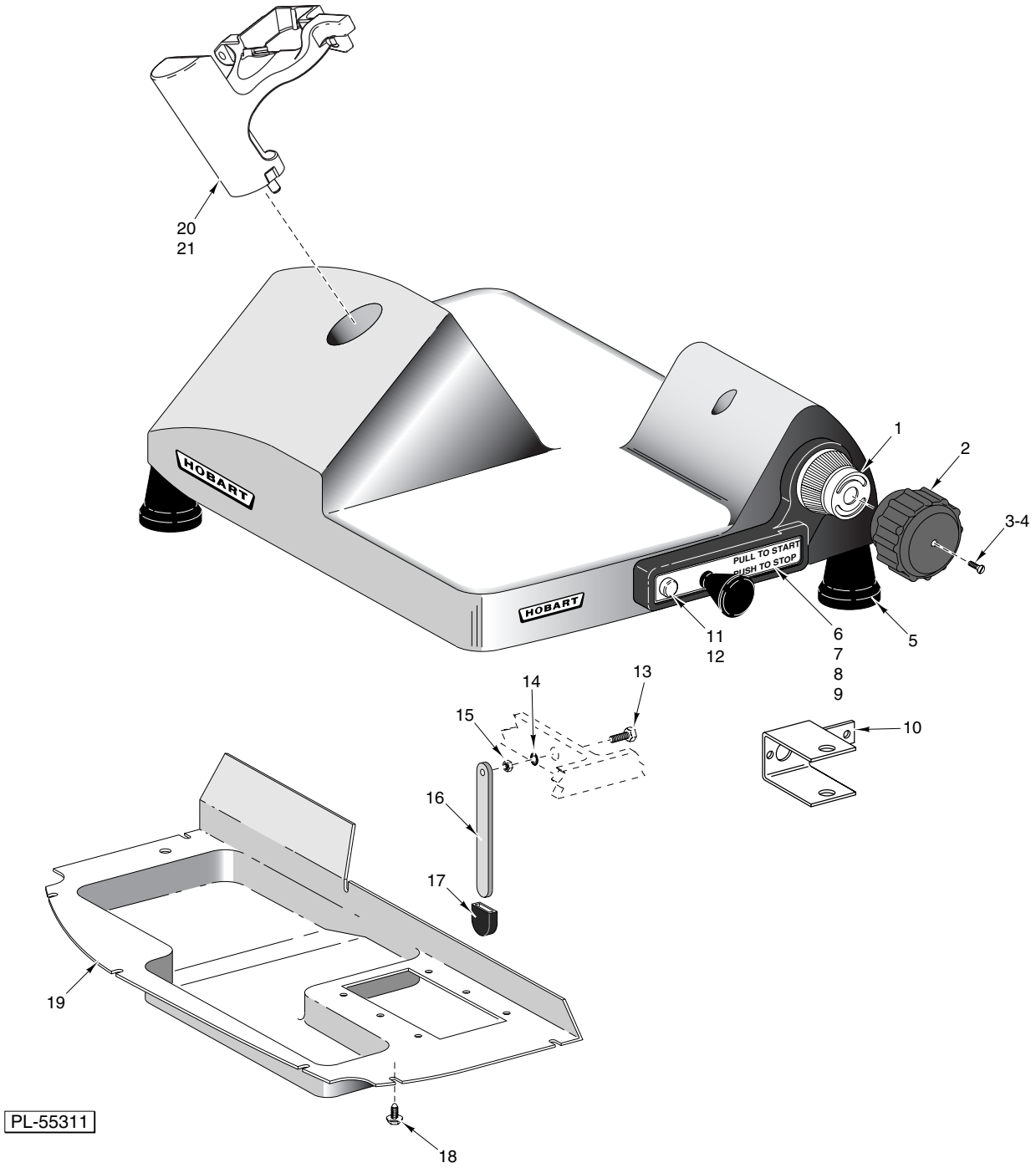
20
21
HOBART
HOBART
PULL TO START
PUSH TO STOP
1
2
3-4
5
6
7
8
9
10
11
12
13
14
15
16
17
18
19
PL-55311

BASE UNIT

BASE UNIT

ILLUS. PL-55311	PART NO.	NAME OF PART	AMT.
1	00-438982	Dial Assy.	1
2	00-439085	Knob – Indexing	1
3	SC-023-10	Mach. Screw 10-24 x 3/4 Oval Hd.	1
4	SC-121-95	Mach. Screw, SF, 10-24 x 5/8 (2612C Only)	1
5	00-477721	Foot (Tall)	4
6	00-439091	Bezel – Index	1
7	00-479745	Bezel – Index (2612C Only)	1
8	SD-038-21	Self-Tapping Screw 8-32 x 1 1/4 Phil. Pan Hd., Type TT	2
9	SD-038-20	Self-Tapping Screw 8-32 x 1 Phil. Pan Hd., Type TT	2
10	00-479655	Lock Bracket (2612C Only)	1
11	00-439042-00001	Lamp (125 V.)	1
12	00-439042-00002	Lamp (250 V.)	1
13	SC-041-02	Cap Screw 1/4-20 x 1 Hex Hd.	1
14	WL-014-10	Lockwasher 1/4 External Shakeproof	1
15	NS-015-01	Nut 1/4-20 Hex (SST)	1
16	00-437865	Leg – Cleaning	1
17	00-478023	Cap – Lift Leg	1
18	SD-038-16	Self-Tapping Screw 6-32 x 3/8 Hex Washer Hd., Type RL	11
19	00-873738	Cover – Bottom	1
20	00-479636-00004	Mount – Sharpener Housing	1
21	SD-038-13	Self-Tapping Screw 5/16-18 x 7/8 Hex Washer Hd., Type RL	2

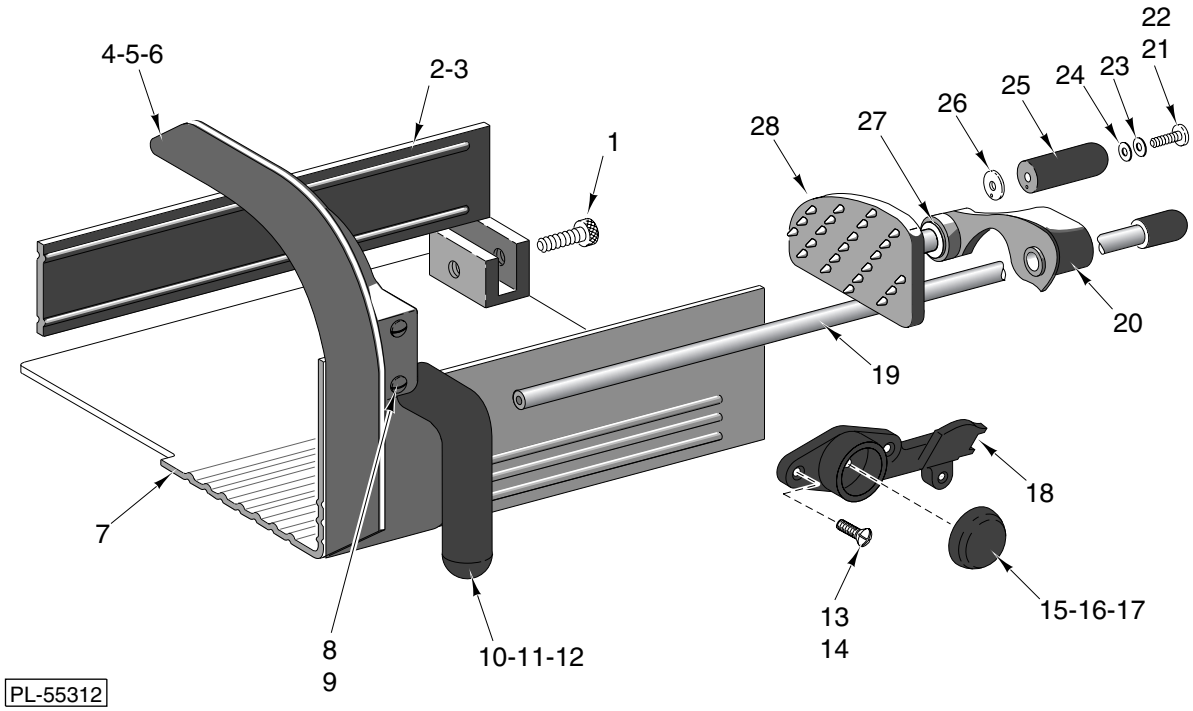

CARRIAGE TRAY UNIT

CARRIAGE TRAY UNIT

ILLUS. PL-55312	PART NO.	NAME OF PART	AMT.
1	00-290984	Thumb Screw – Fence	1
2	00-295118	Fence – Thumb Screw Assy. (Packaged) (Incls. Item 5) (SST)	1
3	00-295117	High Fence & Thumb Screw Assy. (Horizontal Carriage Tray) (Incls. Item 1) (SST)	1
4	00-873867-00001	Support Handle & Slide Rod	1
5	SC-123-09	Mach. Screw Special 8-32 x 3/8 Phil. Oval Hd. (2612 Only)	3
6	SC-124-77	Mach. Screw, SF, 8-32 x 3/8 (2612C Only)	3
7	00-873710	Carriage Tray (SST)	1
8	SC-123-10	Mach. Screw Special 8-32 x 1 1/2 Phil. Oval Hd. (2612 Only)	2
9	SC-124-78	Mach. Screw, SF 8-32 x 1 1/2 (2612C Only)	2
10	00-439060	Handle – Carriage	1
11	WS-022-02	Washer	1
12	SC-041-02	Cap Screw 1/4-20 x 1 Hex Hd.	1
13	SC-123-09	Mach. Screw Special 8-32 x 3/8 Phil. Oval Hd. (2612 Only)	3
14	SC-124-77	Mach. Screw, SF, 8-32 x 3/8 (2612C Only)	3
15	00-477533	Cap – Meat Hanger	1
16	WS-022-02	Washer	1
17	SC-041-02	Cap Screw 1/4-20 x 1 Hex Hd.	1
18	00-478431	Hanger – Meat Grip	1
19	00-478015	Knob & Slide Rod Assy.	1
20	00-478264	Kit – Meat Grip Arm	1
21	SC-113-52	Mach. Screw Special 10-24 x 1/2 Phil. Truss Hd. (2612 Only)	1
22	SC-121-34	Mach. Screw, SF 10-24 x 1/2 (2612C Only)	1
23	00-070345	Washer – Handle Retaining	1
24	00-070344	Washer – Handle Tension	1
25	00-439078	Handle – Meat Grip (Non-Metallic)	1
26	00-437006	Washer – Handle	1
27	00-438280	Bushing	1
28	00-439009	Meat Grip	1
	00-477537	Meat Grip Assy. (Lightweight) (Packaged)	1

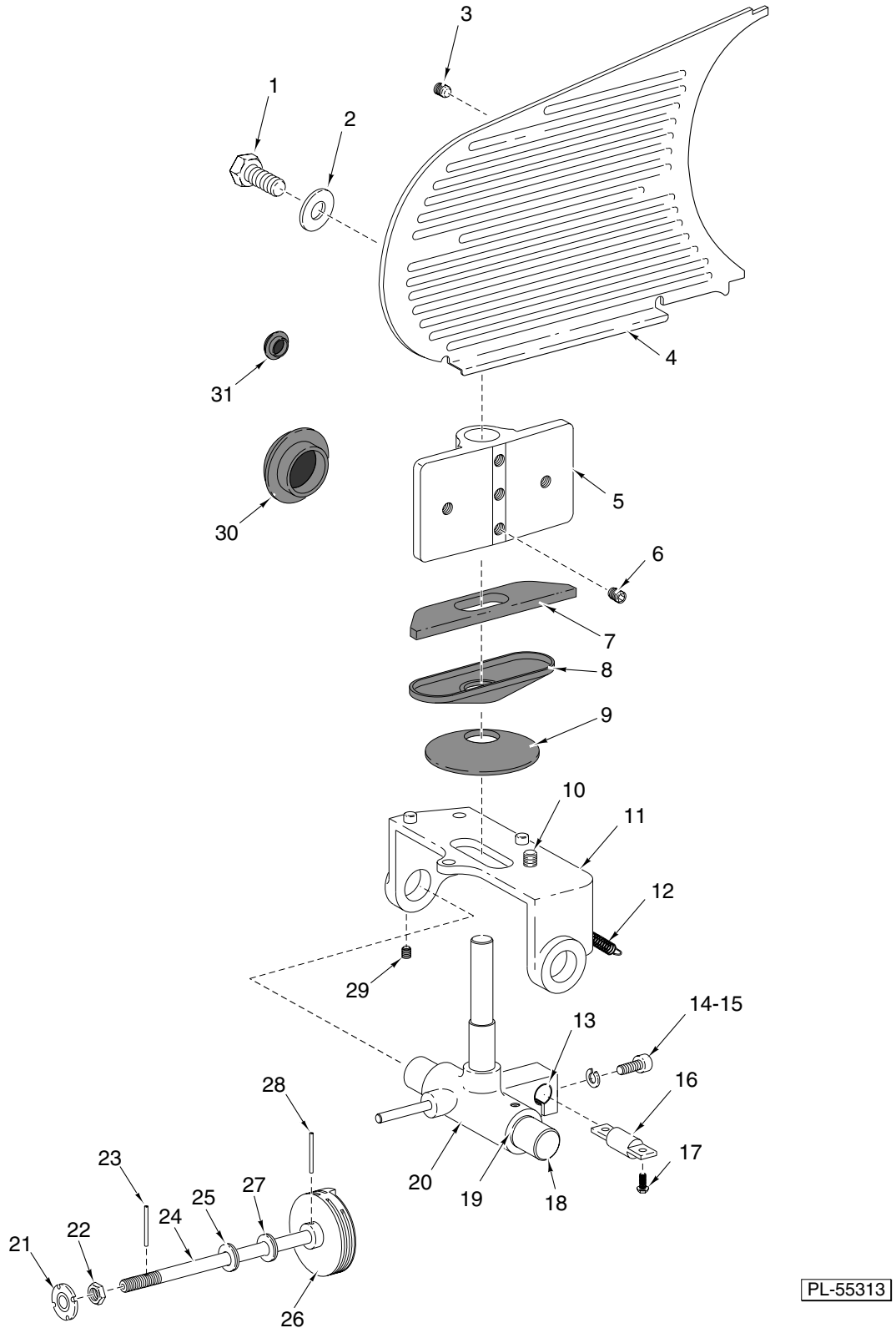

GAUGE PLATE UNIT

GAUGE PLATE UNIT

ILLUS. PL-55313	PART NO.	NAME OF PART	AMT.
1	SC-041-16	Cap Screw 5/16-18 x 1 3/8 Hex Hd. (SST)	2
2	WS-005-32	Washer	2
3	SC-123-52	Set Screw 5/16-24 x 5/8 Hdls., Flat Pt.	4
4	00-438980	Gauge Plate Assy.	1
5	00-439021-00002	Mount – Special	1
6	SC-124-11	Set Screw 5/16-24 x 5/8 Hdls., Cone Pt.	3
7	00-477744	Cover – Gauge Plate (Bottom)	1
8	00-477745	Retainer – Cover	1
9	00-439079	Disc – Cover	1
10	SD-038-13	Self-Tapping Screw 5/16-18 x 7/8 Hex Washer Hd., Type RL	3
11	00-439072-00002	Support – Slide Index (Incls. Item 28)	1
12	00-478432	Spring – Index Backlash	1
13	00-478425	Bushing – Anti-Rotation Rod	1
14	SC-124-46	Cap Screw 10-24 x 3/4 Soc. Hd.	3
15	WL-008-13	Lockwasher #10 Internal Shakeproof	3
16	00-478415	Rod – Index Anti-Rotation	1
17	SD-038-14	Self-Tapping Screw 1/4-20 x 7/8 Hex Washer Hd., Type RL	2
18	00-438886	Rod – Index Slide	1
19	00-478426	Bushing – Index Slide	2
20	00-478416-00002	Slide – Index Mechanism	1
21	00-076948	Disc – Indexing Drive	1
22	00-010928-00002	Nut – Special	2
23	RP-002-40	Roll Pin 3/32 Dia. x 3/4 Lg.	1
24	00-438890	Camshaft	1
25	00-088298	Washer – Belleville	2
26	00-479625	Cam – Indexing	1
27	WS-030-58	Washer	2
28	RP-003-12	Roll Pin 1/8 Dia. x 1 1/4 Lg.	1
29	SC-088-71	Set Screw 8-32 x 3/8 Hdls., Flat Pt.	2
30	00-477753	Plug – Hole (Large)	2
31	00-477754	Plug – Hole (Small)	4

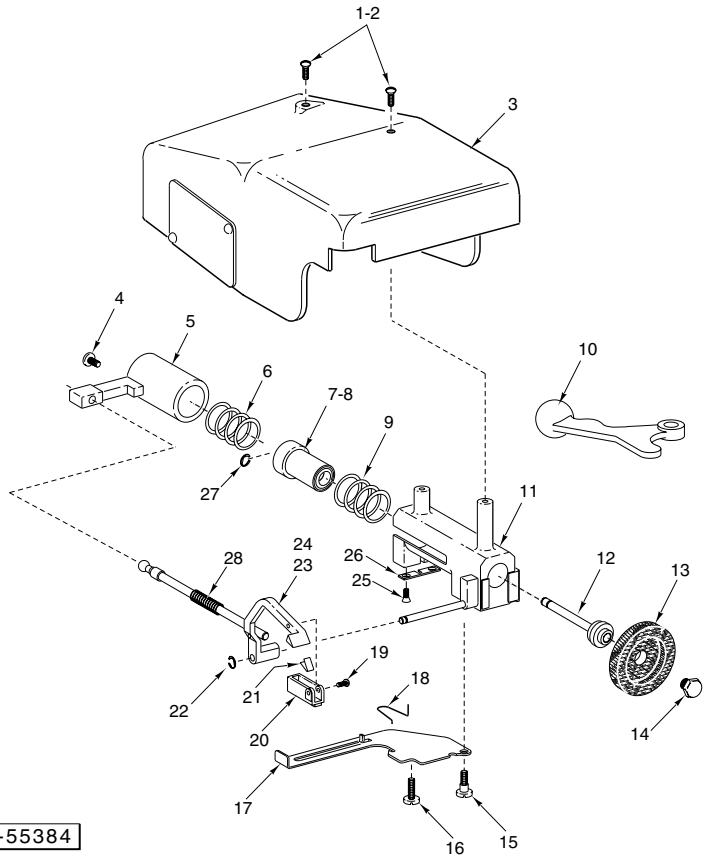

PL-55384

KNIFE SHARPENER UNIT

ILLUS. PL-55314	PART NO.	NAME OF PART	AMT.
1	SC-113-52	Mach. Screw Special 10-24 x 1/4 Phil. Truss Hd. (2612 Only)	2
2	SC-121-34	Mach. Screw, SF 10-24 x 1/4 (2612C Only)	2
3	00-438459-00001	Plate & Cover Assy.	1
4	SC-122-87	Mach. Screw Special 8-32 x 1/4 Pan Hd.	1
5	00-437260	Actuator	1
6	00-438430	Spring – Main	1
7	00-438464	Plunger & Ball Bearing Assy. (Incls. Item 8)	1
8	BB-021-36	Ball Bearing NSK R4BDD	2
9	00-438437	Spring – Return	1
10	00-479762	Handle – Sharpener, Cam	1
11	00-873852	Housing & Stud Assy.	1
12	00-438417	Shaft – Grinding Wheel	1
13	00-439691	Stone Service Kit	1
14	00-435814	Retaining Screw (RH)	1
15	00-438442	Screw – Shoulder Special	1
16	SC-122-87	Mach. Screw Special 8-32 x 1/4 Pan Hd.	1
17	00-439698	Lever – Locking	1
18	00-438435	"U" Spring (Long End Inserted Into Housing)	1
19	SC-122-84	Mach. Screw Special 2-56 x 9/16 Pan Hd.	1
20	00-478747	Stone – Truing	1
21	00-435324	Spring – Truing Stone	2
22	RR-006-22	Retaining Ring	1
23	00-873835	Arm – Truing	1
24	00-873836	Push Rod – Truing	1
25	SC-122-85	Mach. Screw Special 4-40 x 1/4 Flat Hd.	2
26	00-439700	Plate – Rear Locking	1
27	RR-006-22	Retaining Ring	1
28	00-438426	Spring – Truing Arm	1
	00-873847-00001	Sharpener Assy. (Incls. Items 1 and 3 thru 28) (2612 Only)	1
	00-873847-00004	Sharpener Assy. (Incls. Items 2 thru 28) (2612C Only)	1
	00-875046	Sharpener Assy., Correctional (2612C Only)	1