HOBART

CATALOG OF REPLACEMENT PARTS

VACUUM MARINATOR

HVM30 **ML-104771**



A product of HOBART CORPORATION 701 S. RIDGE AVENUE TROY, OHIO 45374-0001

FORM 34081 (7-98)

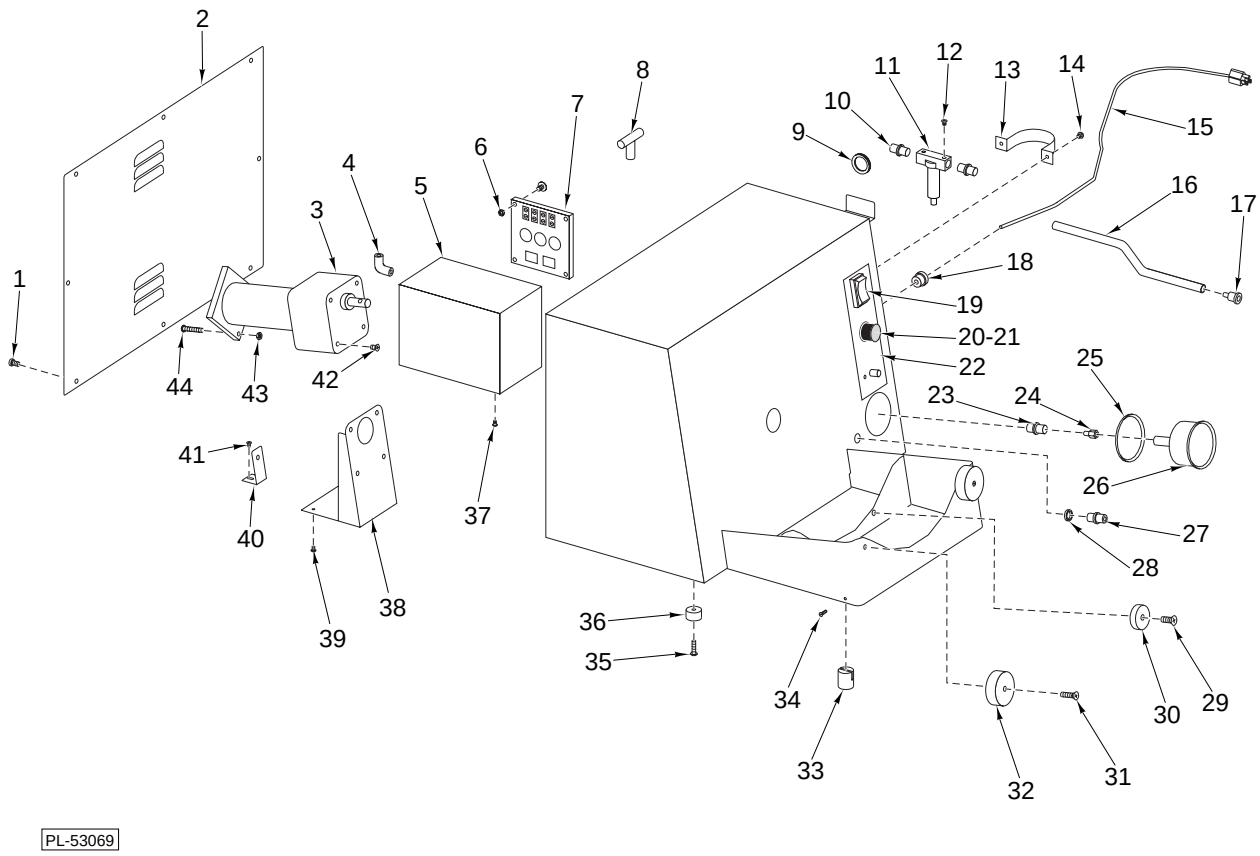

VACUUM MARINATOR ASSEMBLY

© HOBART CORPORATION, 1998

VACUUM MARINATOR ASSEMBLY

ILLUS. PL-53069	PART NO.	NAME OF PART	AMT.
1	SC-053-35	Mach. Screw 8-32 x ⅜ Truss Hd., Slotted	8
2	00-479205	Panel - Access	1
3	00-479213	Motor - Drive	1
4	FP-089-09	Fitting - Plastic Tube	1
5	00-479230	Pump - Vacuum	1
6	NS-031-15	Stop Nut - Special 10-24 Hex (SST)	2
7	00-479222	Board - PC Drive (Includes potentiometer)	1
8	FP-089-11	Fitting - Plastic Tube	1
9	00-479232	Grommet - Rubber	1
10	FP-089-10	Fitting - Plastic Tube	2
11	00-479229	Filter - Air Line (Includes plastic element)	1
12	SC-123-03	Screw - Mach. 10-24 x ¼	2
13	00-479217	Guard - Filter	1
14	SC-066-13	Mach. Screw 8-32 x ¼ Phil. Truss Hd.	2
15	00-117542-00026	Cord & Plug Assy (3 Cond., 114 V.)	1
16	00-547966	Hose (Cut to length)	AR
17	00-479224	Coupling - Quick-Connect	1
18	FE-023-26	Plug - Strain Relief	1
19	00-087711-00300	Switch - Rocker	1
20	00-479223	Timer - 60 Min.	1
21	00-437775	Knob - Potentiometer	2
22	00-479019	Label - Timer	1
23	FP-088-30	Fitting - Hose	1
24	00-479242	Damper - Gage	1
25	00-479287	Clamp - Collar	1
26	00-479241	Gage - Vacuum	1
27	00-479221	Nipple - Quick-Connect	1
28	FP-089-12	Nut - Lock, Pipe ¼	1
29	SC-022-32	Mach. Screw ¼ - 20 x ½ Flat Hd.	2
30	00-479212	Guide - Barrel	2
31	SC-022-45	Screw - Mach. 5/16-18 x ¾	2
32	00-479206	Roller - Plastic Bearing	2
33	00-479218	Stand - Plastic, Front	2
34	SC-115-35	Mach. Screw 8-32 x ½ Flat Hd.	2
35	SC-053-03	Mach. Screw 10-24 x ¾ Truss Hd., Slotted	4
36	00-479228	Foot	4
37	SC-066-13	Mach. Screw 8-32 x ¼ Phil. Truss Hd.	3
38	00-479215	Bracket - Motor, Front	1
39	SC-123-03	Screw - Mach. 10-24 x ¼	4
40	00-479216	Bracket - Motor, Rear	1
41	SC-066-13	Mach. Screw 8-32 x ¼ Phil. Truss Hd.	1
42	SC-066-22	Mach. Screw 10-32 x ⅜ Truss Hd.	4
43	NS-031-15	Stop Nut - Special 10-24 Hex (SST)	1
44	SC-053-03	Mach. Screw 10-24 x ¾ Truss Hd., Slotted	1
	00-479182	Filter - Element (Plastic Element for Air Filter)	1

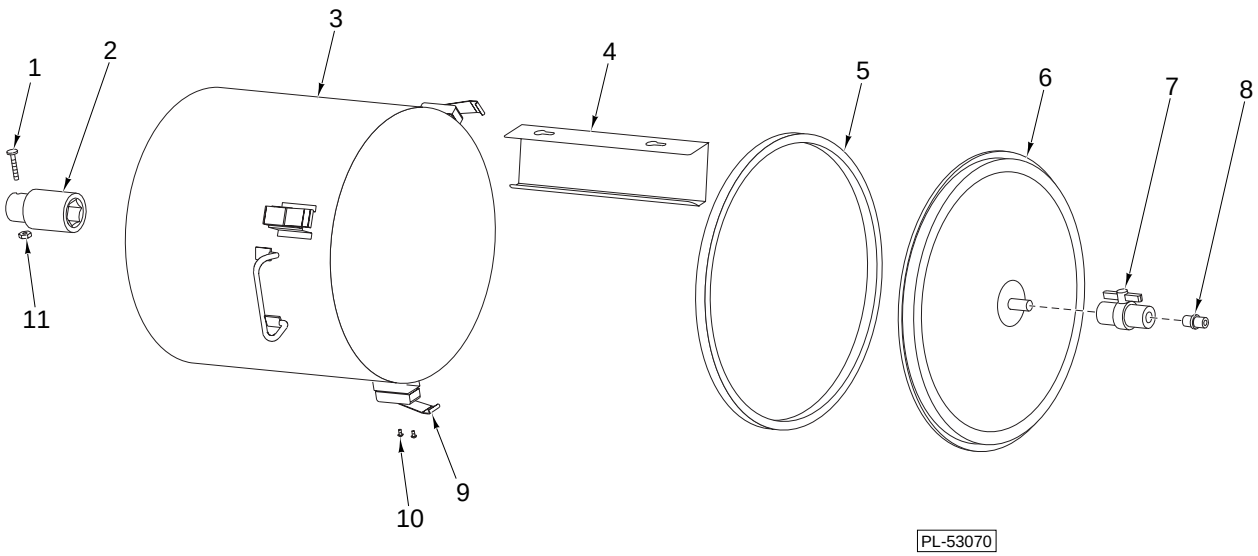

TANK ASSEMBLY

ILLUS. PL-53070	PART NO.	NAME OF PART	AMT.
1	SC-053-50	Mach. Screw 10-24 x 1½ Truss Hd. SST	1
2	00-479214	Socket - Drive	1
3	00-479278	Tank - Sub-assembly	1
4	00-479199	Baffle	1
5	00-479277	Gasket - Tank	1
6	00-479279	Cover - Sub-assembly	1
7	00-479220	Valve - Ball	1
8	00-479221	Nipple - Quick-Connect	1
9	00-479219	Latch - Lid	3
10	SC-066-01	Mach. Screw 6-32 x ¼ Phil. Truss Hd.	6
11	NS-031-15	Stop Nut - Special 10-24 Hex (SST)	1