CATALOG OF REPLACEMENT PARTS

WS Series WS SERIES WASTE EQUIPMENT SYSTEM

A product of HOBART 701 S. RIDGE AVENUE TROY, OHIO 45374-0001

FORM 33655 Rev. B (May 2023)

 © HOBART 2023

Table of Contents

5 JUCTION BOX
7 CONTROL BOX (REMOTELY MOUNTED)(PREVIOUS CONSTRUCTION)
11 CONTROL BOX (REMOTELY MOUNTED)(CURRENT CONSTRUCTION)
15 WATERPRESS CONTROL UNIT
17 PULPER DRIVE UNIT
19 FEED HOOD UNIT
21 PULPER TANK/TRIM UNIT
23 TOP COVER UNIT (PREVIOUS CONSTRUCTION)
25 TOP COVER UNIT (CURRENT CONSTRUCTION)
27 WATERPRESS MOTOR AND SPEED REDUCER (PREVIOUS CONSTRUCTION)
29 WATERPRESS MOTOR AND SPEED REDUCER (CURRENT CONSTRUCTION)
31 WATERPRESS FRAME UNIT
35 SCREW/SCREEN/SLURRY INLET UNIT
37 WATERPRESS CHUTE UNIT
39 RECIRCULATING PUMP AND MOTOR
41 RECIRCULATING PUMP AND MOTOR
43 RECIRCULATING LINES (TRAY FLUSH AND TROUGH FLUSH)
45 RECIRCULATING LINES (TROUGH FLUSH)
47 RECIRCULATING LINE UNIT (TRAY FLUSH ONLY)
49 RECIRCULATING LINE UNIT (W/O TRAY FLUSH OR TROUGH FLUSH)
51 FILL PIPING UNIT (R-L)
53 FILL PIPING UNIT (L-R)
55 SCREEN FLUSH/FILL PIPING
57 DRAIN PIPING UNIT (R-L) (SINGLE VALVE DRAIN SYSTEM) (PREVIOUS CONSTRUCTION)
59 DRAIN PIPING UNIT (R-L) (SINGLE VALVE DRAIN SYSTEM) (CURRENT CONSTRUCTION)
61 DRAIN PIPING UNIT (L-R) (SINGLE VALVE DRAIN SYSTEM) (PREVIOUS CONSTRUCTION)
63 DRAIN PIPING UNIT (L-R) (SINGLE VALVE DRAIN SYSTEM) (CURRENT CONSTRUCTION)
65 TRAY FLUSH NOZZLE ACCESSORIES
67 RECIRCULATING PUMP PARTS
69 PULPER TANK (UNDERCOUNTER W/FEED HOOD)
71 ACCESSORIES

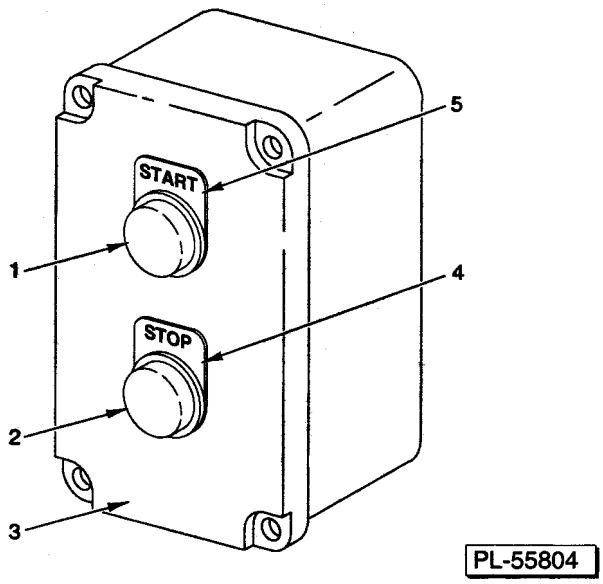

JUCTION BOX

JUCTION BOX

JUCTION BOX

ILLUS. PL-55804	PART NO.	NAME OF PART	AMT.
1	00-087711-161-4	Switch - Push-button	1
2	00-087711-161-2	Switch - Push-button	1
3	00-223792	Enclosure - Pushbutton	1
4	00-087711-166-2	Plate - Legend (Stop)	1
5	00-087711-166-1	Plate - Legend (Start)	1

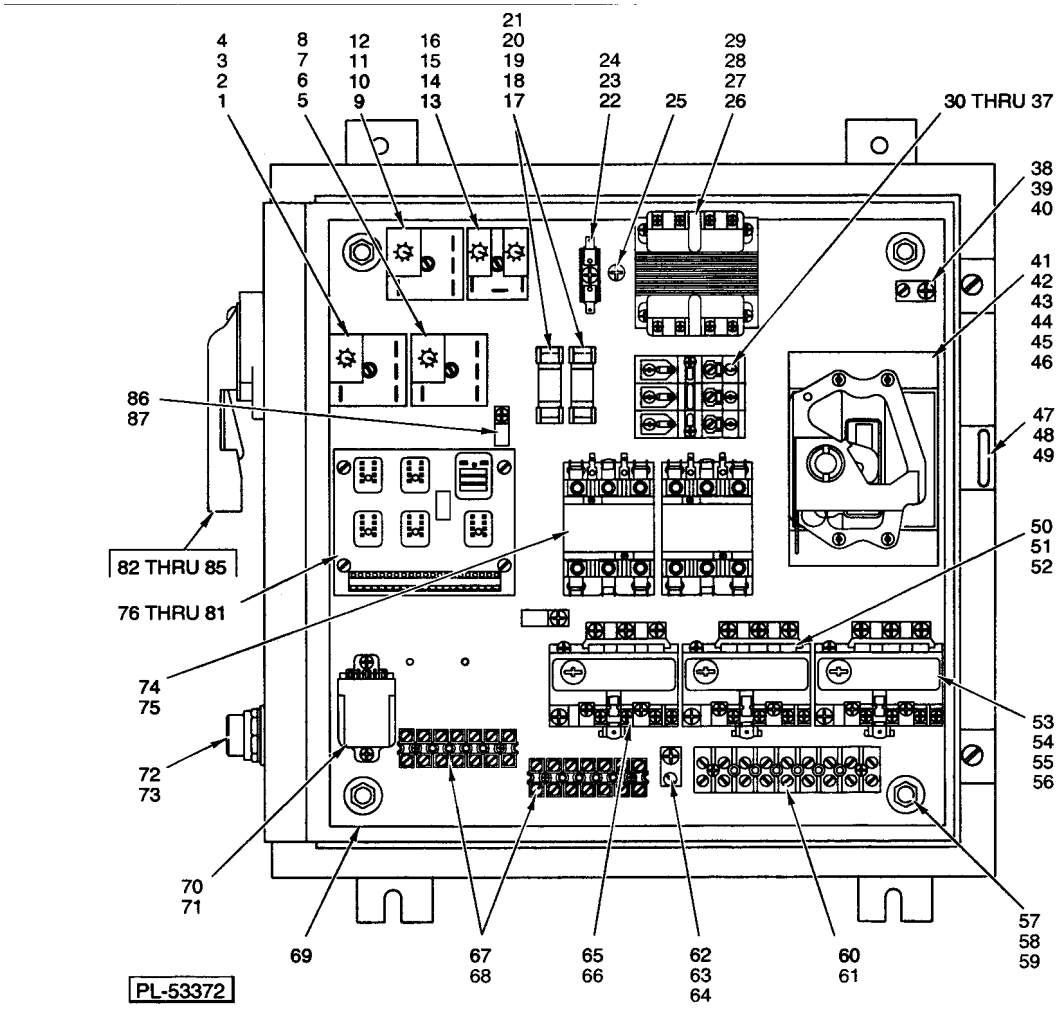

CONTROL BOX (REMOTELY MOUNTED)
(PREVIOUS CONSTRUCTION)

CONTROL BOX
(REMOTELY MOUNTED)(PREVIOUS CONSTRUCTION)

CONTROL BOX
(REMOTELY MOUNTED)(PREVIOUS CONSTRUCTION)

ILLUS. PL-53372	PART NO.	NAME OF PART	AMT.
1	00-087714-00036	Relay Time Delay (Variable)	1
2	00-437070-00005	Module - Plug On	1
3	WL-007-15	Lockwasher 1/4 External Shakeproof	1
4	SD-036-13	Self-Tapping Screw 1/4-20 x 1-1/4 Hex. Hex Washer Hd., Type T	1
5	00-087714-00036	Relay Time Delay (Variable)	1
6	00-437070-00004	Module - Plug On	1
7	WL-007-15	Lockwasher 1/4 External Shakeproof	1
8	SD-036-13	Self-Tapping Screw 1/4-20 x 1-1/4 Hex. Hex Washer Hd., Type T	1
9	00-087714-00036	Relay Time Delay (Clean Cycle Only)	1
10	00-437070-00005	Module - Plug On (Clean Cycle Only)	1
11	WL-007-15	Lockwasher 1/4 External Shakeproof (Clean Cycle Only)	1
12	SD-036-13	Self-Tapping Screw 1/4-20 x 11/4 Hex Washer Hd., Type T (Clean Cycle Only)	1
13	00-087714-00038	Relay - Recycling	1
14	00-437070-00002	Module - Plug-On	2
15	WL-007-15	Lockwasher 1/4 External Shakeproof	1
16	SD-036-13	Self-Tapping Screw 1/4-20 x 1-1/4 Hex. Hex Washer Hd., Type T	1
17	00-294436-00002	Fuse Block (3 Pole)	2
18	FE-024-70	Fuse (0.25 Amp.) (500 V.)	2
19	FE-025-19	Fuse (0.5 Amp.) (250 V.)	2
20	FE-025-20	Fuse (0.2 Amp.) (600 V.)	2
21	SD-008-18	Self-Tapping Screw 8-18 x 3/8 Phil. Hd., Type B	4
22	00-294436-00003	Block - Fuse	1
23	FE-022-28	Fuse (0.5 Amp.) (250 V.)	1
24	SD-019-29	Self-Tapping Screw 6-20 x 1/2 Phil. Pan Hd., Type B	1
25	SD-019-29	Self-Tapping Screw 6-20 x 1/2 Phil. Pan Hd., Type B	1
26	00-294500-00028	Transformer (50 VA) (208/240/380/480/60/3) (200/380/415/50/3)	1
27	00-294500-00029	Transformer (600 V.) (575/60/3)	1
28	WL-014-07	Lockwasher #10 External Shakeproof (SST)	4
29	SD-008-25	Self-Tapping Screw 10-16 x 1/2 Phil. Pan Hd., Type B	4
30	00-294436-00006	Fuse Block	1
31	SD-008-18	Self-Tapping Screw 8-18 x 3/8 Phil. Hd., Type B	2
32	FE-025-26	Fuse (25 Amp.) (200/50/3)	3
33	FE-025-24	Fuse (15 Amp.) (208/60/3)	3
34	FE-025-25	Fuse (20 Amp.) (240/60/3)	3
35	FE-025-23	Fuse (10 Amp.) (480/60/3, 380/50/3)	3
36	FE-025-22	Fuse (8 Amp.) (380/60/3, 575/60/3)	3
37	FE-025-38	Fuse (12 Amp.) (415/50/3)	3
38	00-118544-00001	Lug - Solderless	1
39	WL-014-07	Lockwasher #10 External Shakeproof (SST)	1
40	SD-034-59	Self-Tapping Screw 10-32 x 3/8 Phil. Pan Hd., Type T	1
41	00-223488-00032	Circuit Breaker (208/60/3) (200/50/3)	1
42	00-223488-00030	Circuit Breaker (240/60/3)	1
43	00-223488-00008	Circuit Breaker (380/480/60/3) (380/415/50/3)	1
44	00-223488-00011	Circuit Breaker (575/60/3)	1
45	00-223521-00002	Handle - Shaft	1
46	00-270598	Handle - Mechanism	1
47	00-474103-00002	Control Box - Disconnect Switch (STD)	1
48	00-474103-00004	Control Box - Disconnect Switch (NEMA 4 x Only)	1
49	00-474103-00006	Control Box - Disconnect Switch (Flush Mounted)	1
50	00-088196-014-1	Relay - Overload (380/60/3)	1
51	00-088196-014-2	Relay - Overload (208/240/480/575/60/3) (200/380/415/50/3)	1
52	SD-019-29	Self-Tapping Screw 6-20 x 1/2 Phil. Pan Hd., Type B	3
53	00-088196-014-2	Relay - Overload (480/575 V., 60 Hz., 3 Ph.)	1
54	00-088196-014-3	Relay - Overload (380 V., 60 Hz., 3 Ph.) (380/415 V., 3 Ph.)	1
55	00-088196-014-4	Relay - Overload (208/240 V., 60 Hz., 3 Ph.) (200 V., 50 Hz., 3 Ph.)	1

CONTROL BOX
(REMOTELY MOUNTED)(PREVIOUS CONSTRUCTION)

ILLUS. PL-53372	PART NO.	NAME OF PART	AMT.
56	SD-019-29	Self-Tapping Screw 6-20 x 1/2 Phil. Pan Hd., Type B.	3
57	NS-013-25	Nut 3/8-16 Hex.	4
58	WS-028-22	Washer (SST).	4
59	WL-014-28	Lockwasher 3/8 External (SST).	4
60	00-294325-00018	Terminal Block (9 Pos.).	1
61	SD-019-26	Self-Tapping Screw 8-18 x 1-1/4 Phil. Rd. Hd., Type B.	2
62	00-118544-00001	Lug - Solderless.	1
63	WL-014-07	Lockwasher #10 External Shakeproof (SST).	1
64	SD-034-59	Self-Tapping Screw 10-32 x 3/8 Phil. Pan Hd., Type T.	1
65	00-088196-014-1	Relay - Overload.	1
66	SD-019-29	Self-Tapping Screw 6-20 x 1/2 Phil. Pan Hd., Type B.	3
67	00-294325-013-5	Block - Terminal.	2
68	SD-019-29	Self-Tapping Screw 6-20 x 1/2 Phil. Pan Hd., Type B.	4
69	00-473823	Base Plate - Control Box.	1
70	00-205113-00001	Relay (3.P.D.T.) Relay (3 PDT) (10 Amp., 120 VAC).	1
71	SD-019-29	Self-Tapping Screw 6-20 x 1/2 Phil. Pan Hd., Type B.	2
72	00-473824-00002	Kit - Overload Reset.	1
73	00-436398	Boot - Pushbutton (NEMA 4 x Only).	1
74	00-087713-087-2	Contactor (40 Amp., 3 Pole).	2
75	SD-034-59	Self-Tapping Screw 10-32 x 3/8 Phil. Pan Hd., Type T.	4
76	00-475191	Board Assy. - Relay.	1
77	00-329057	Standoff (Male/Female Hex).	4
78	WL-006-42	Lockwasher #6 Medium (SST).	4
79	SC-021-08	Mach. Screw 6-32 x 3/8 Slotted Rd. Hd. (SST).	4
80	00-122837	Relay.	AR
81	00-294777	Clip - Relay.	AR
82	00-222450	Handle - Varible Depth (STD & Flush).	1
83	00-222450-00002	Handle - Varible Depth (NEMA 4 x Only).	1
84	SC-033-17	Mach. Screw 1/4-20 x 7/16 Phil. Pan Hd. (Brass).	3
85	WL-005-27	Lockwasher 1/4 Light (Bronze).	3
86	00-294677-00002	Clamp - Wire (1/2 I.D.).	2
87	SD-034-59	Self-Tapping Screw 10-32 x 3/8 Phil. Pan Hd., Type T.	2

NOTES

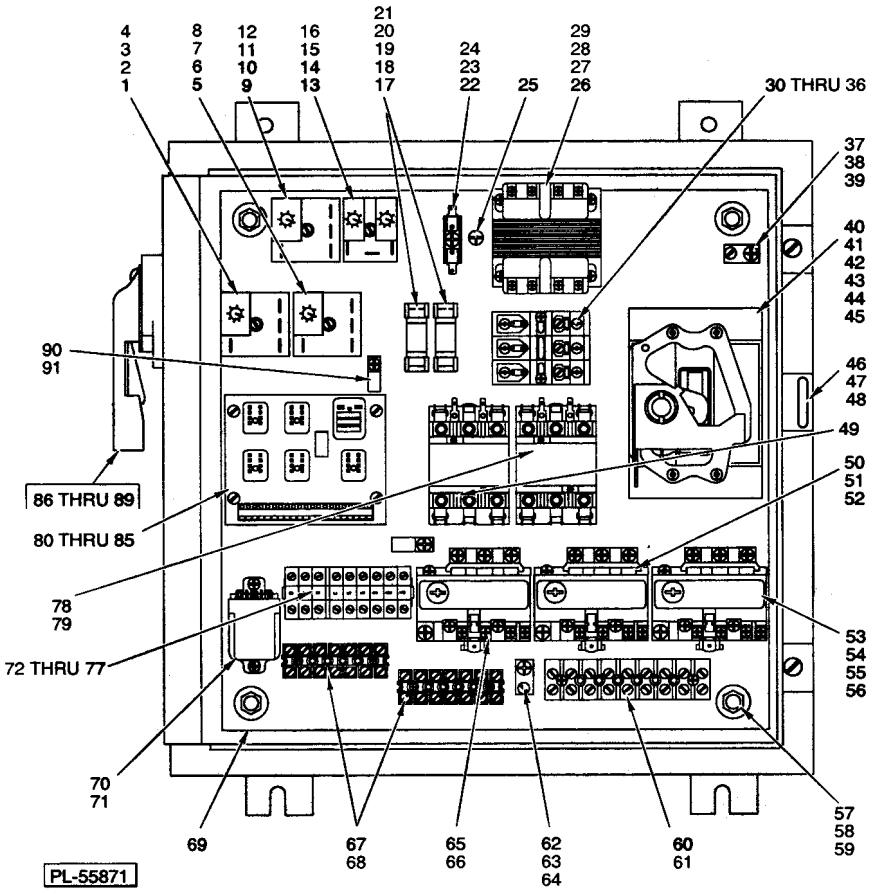

CONTROL BOX (REMOTELY MOUNTED)
(CURRENT CONSTRUCTION)

CONTROL BOX
(REMOTELY MOUNTED)(CURRENT CONSTRUCTION)

CONTROL BOX
(REMOTELY MOUNTED)(CURRENT CONSTRUCTION)

ILLUS. PL-55871	PART NO.	NAME OF PART	AMT.
1	00-087714-00036	Relay Time Delay (Variable)	1
2	00-437070-00005	Module - Plug On	1
3	WL-007-15	Lockwasher 1/4 External Shakeproof	1
4	SD-036-13	Self-Tapping Screw 1/4-20 x 1-1/4 Hex. Hex Washer Hd., Type T	1
5	00-087714-00036	Relay Time Delay (Variable)	1
6	00-437070-00004	Module - Plug On	1
7	WL-007-15	Lockwasher 1/4 External Shakeproof	1
8	SD-036-13	Self-Tapping Screw 1/4-20 x 1-1/4 Hex. Hex Washer Hd., Type T	1
9	00-087714-00036	Relay Time Delay (Clean Cycle Only)	1
10	00-437070-00005	Module - Plug On (Clean Cycle Only)	1
11	WL-007-15	Lockwasher 1/4 External Shakeproof (Clean Cycle Only)	1
12	SD-036-13	Self-Tapping Screw 1/4-20 x 11/4 Hex Washer Hd., Type T (Clean Cycle Only)	1
13	00-087714-00038	Relay - Recycling	1
14	00-437070-00002	Module - Plug-On	2
15	WL-007-15	Lockwasher 1/4 External Shakeproof	1
16	SD-036-13	Self-Tapping Screw 1/4-20 x 1-1/4 Hex. Hex Washer Hd., Type T	1
17	00-294436-00002	Fuse Block (3 Pole)	2
18	FE-024-70	Fuse (0.25 Amp.) (500 V.)	2
19	FE-025-19	Fuse (0.5 Amp.) (250 V.)	2
20	FE-025-20	Fuse (0.2 Amp.) (600 V.)	2
21	SD-008-18	Self-Tapping Screw 8-18 x 3/8 Phil. Hd., Type B	4
22	00-294436-00003	Block - Fuse	1
23	FE-022-28	Fuse (0.5 Amp.) (250 V.)	1
24	SD-019-29	Self-Tapping Screw 6-20 x 1/2 Phil. Pan Hd., Type B	1
25	SD-019-29	Self-Tapping Screw 6-20 x 1/2 Phil. Pan Hd., Type B	1
26	00-294500-00028	Transformer (50 VA) (208/240/380/480/60/3) (200/380/415/50/3)	1
27	00-294500-00029	Transformer 600 V. (575/60/3)	1
28	WL-014-07	Lockwasher #10 External Shakeproof (SST)	4
29	SD-008-25	Self-Tapping Screw 10-16 x 1/2 Phil. Pan Hd., Type B	4
30	00-294436-00006	Fuse Block	1
31	SD-008-18	Self-Tapping Screw 8-18 x 3/8 Phil. Hd., Type B	2
32	FE-025-26	Fuse (25 Amp.) (208/60/3)	3
33	FE-025-56	Fuse (30 Amp.) (240/60/3, 200/50/3)	3
34	FE-025-24	Fuse (15 Amp.) (480/60/3, 380/50/3, 415/50/3)	3
35	FE-025-23	Fuse (10 Amp.) (380/60/3)	3
36	FE-025-38	Fuse (12 Amp.) (575/60/3)	3
37	00-118544-00001	Lug - Solderless	1
38	WL-014-07	Lockwasher #10 External Shakeproof (SST)	1
39	SD-034-59	Self-Tapping Screw 10-32 x 3/8 Phil. Pan Hd., Type T	1
40	00-223488-00032	Circuit Breaker (208/60/3) (200/50/3)	1
41	00-223488-00030	Circuit Breaker (240/60/3)	1
42	00-223488-00008	Circuit Breaker (380/480/60/3) (380/415/50/3)	1
43	00-223488-00011	Circuit Breaker (575/60/3)	1
44	00-223521-00002	Handle - Shaft	1
45	00-270598	Handle - Mechanism	1
46	00-474103-00010	Control Box - Disconnect Switch (STD)	1
47	00-474103-00011	Control Box - Disconnect Switch (NEMA 4 x Only)	1
48	00-474103-00012	Control Box - Disconnect Switch (Flush Mounted)	1
49	00-087713-018-2	Contactor - Auxiliary Switch (40 Amp.) (3 Pole)	1
50	00-088196-029-1	NLA - Obsolete--Relay - Overload	1
51	00-088196-029-2	NLA - Obsolete--Relay - Overload (208/240/480/575/60/3) (200/380/415/50/3)	1
52	SD-019-29	Self-Tapping Screw 6-20 x 1/2 Phil. Pan Hd., Type B	3
53	00-088196-029-2	NLA - Obsolete--Relay - Overload (208/240/480/575/60/3) (200/380/415/50/3)	1
54	00-088196-029-3	NLA - Obsolete--Relay - Overload (380 V., 60 Hz., 3 Ph.) (380/415 V., 3 Ph.)	1
55	00-088196-029-4	NLA - Obsolete--Relay - Overload (208/240 V., 60 Hz., 3 Ph.) (200 V., 50 Hz., 3 Ph.)	1

CONTROL BOX
(REMOTELY MOUNTED)(CURRENT CONSTRUCTION)

ILLUS. PL-55871	PART NO.	NAME OF PART	AMT.
56	SD-019-29	Self-Tapping Screw 6-20 x 1/2 Phil. Pan Hd., Type B	3
57	NS-013-25	Nut 3/8-16 Hex	4
58	WS-028-22	Washer (SST)	4
59	WL-014-28	Lockwasher 3/8 External (SST)	4
60	00-294325-00018	Terminal Block (9 Pos.)	1
61	SD-019-26	Self-Tapping Screw 8-18 x 1-1/4 Phil. Rd. Hd., Type B	2
62	00-118544-00001	Lug - Solderless	1
63	WL-014-07	Lockwasher #10 External Shakeproof (SST)	1
64	SD-034-59	Self-Tapping Screw 10-32 x 3/8 Phil. Pan Hd., Type T	1
65	00-088196-029-1	NLA - Obsolete--Relay - Overload	1
66	SD-019-29	Self-Tapping Screw 6-20 x 1/2 Phil. Pan Hd., Type B	3
67	00-294325-013-5	Block - Terminal	2
68	SD-019-29	Self-Tapping Screw 6-20 x 1/2 Phil. Pan Hd., Type B	4
69	00-473823	Base Plate - Control Box	1
70	00-205113-00001	Relay (3.P.D.T.) Relay (3 PDT) (10 Amp., 120 VAC)	1
71	SD-019-29	Self-Tapping Screw 6-20 x 1/2 Phil. Pan Hd., Type B	2
72	00-473881	Bracket - Terminal Strip	1
73	SD-008-25	Self-Tapping Screw 10-16 x 1/2 Phil. Pan Hd., Type B	1
74	00-474882	Block - Terminal Assy	1
75	SC-008-09	Mach. Screw 10-24 x 3/8	2
76	WL-003-20	Lockwasher #10 Helical	2
77	NS-009-22	Mach. Nut 10-4 Hex	2
78	00-087713-087-2	Contactor (40 Amp., 3 Pole)	1
79	SD-034-59	Self-Tapping Screw 10-32 x 3/8 Phil. Pan Hd., Type T	4
80	00-475191	Board Assy. - Relay	1
81	00-329057	Standoff (Male/Female Hex)	4
82	WL-006-42	Lockwasher #6 Medium (SST)	4
83	SC-021-08	Mach. Screw 6-32 x 3/8 Slotted Rd. Hd. (SST)	4
84	00-122837	Relay	AR
85	00-294777	Clip - Relay	AR
86	00-222450	Handle - Variable Depth (STD & Flush)	1
87	00-222450-00002	Handle - Variable Depth (NEMA 4 x Only)	1
88	SC-033-17	Mach. Screw 1/4-20 x 7/16 Phil. Pan Hd. (Brass)	3
89	WL-005-27	Lockwasher 1/4 Light (Bronze)	3
90	00-294677-00002	Clamp - Wire (1/2 I.D.)	2
91	SD-034-59	Self-Tapping Screw 10-32 x 3/8 Phil. Pan Hd., Type T	2

NOTES

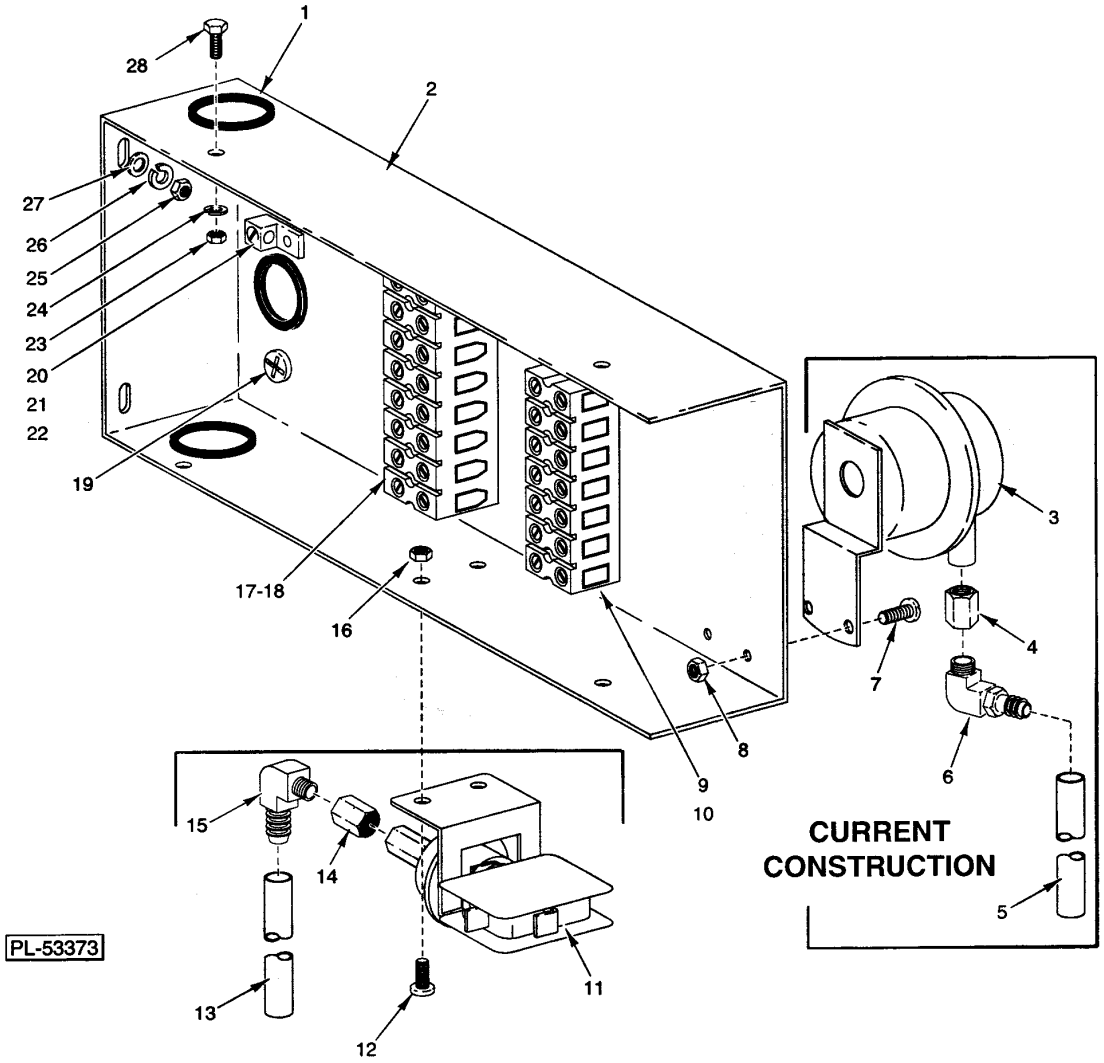

WATERPRESS CONTROL UNIT

WATERPRESS CONTROL UNIT

WATERPRESS CONTROL UNIT

ILLUS. PL-53373	PART NO.	NAME OF PART	AMT.
1	00-474400	Grommet	3
2	00-474399	Plate - Controls	1
3	00-087711-00320	Pressure Switch	1
4	FP-087-93	Adaptor - Pipe 1/4 FPT x 1/8 FPT (Snubber)	1
5	00-222434-00011	Tubing (Clear Plastic)	1
6	00-223478	Hose - Barb 1/4 x 90 Deg	1
7	SC-093-04	Mach. Screw 8-32 x 1/2 Phil. Pan Hd. (SST)	2
8	NS-031-08	Stop Nut 8-32 Special (SST)	2
9	00-294325-013-5	Block - Terminal	2
10	SD-019-29	Self-Tapping Screw 6-20 x 1/2 Phil. Pan Hd., Type B	4
11	00-087711-256-1	Pressure Switch	1
12	SC-112-03	Mach. Screw 10-24 x 1/2 Slotted Pan Hd	2
13	00-222434-00011	Tubing (Clear Plastic)	1
14	FP-087-93	Adaptor - Pipe 1/4 FPT x 1/8 MPT (Snubber)	1
15	00-223478	Hose - Barb 1/4 x 90 Deg	1
16	NS-031-16	Stop Nut 10-24 Hex Elastic (SST)	2
17	00-294325-00018	Terminal Block (9 Pos.)	1
18	SD-019-26	Self-Tapping Screw 8-18 x 1-1/4 Phil. Rd. Hd., Type B	2
19	SD-034-59	Self-Tapping Screw 10-32 x 3/8 Phil. Pan Hd., Type T	1
20	00-118544-00001	Lug - Solderless	1
21	SD-034-59	Self-Tapping Screw 10-32 x 3/8 Phil. Pan Hd., Type T	1
22	WL-014-07	Lockwasher #10 External Shakeproof (SST)	2
23	NS-015-11	Nut 5/16-18 Hex (SST)	2
24	WL-006-23	Lockwasher 5/16 Helical (SST)	2
25	NS-015-11	Nut 5/16-18 Hex (SST)	2
26	WL-006-23	Lockwasher 5/16 Helical (SST)	2
27	WS-005-39	Washer (SST)	2
28	SC-041-09	Cap Screw 5/16-18 x 1/2 Hex Hd. (SST)	2

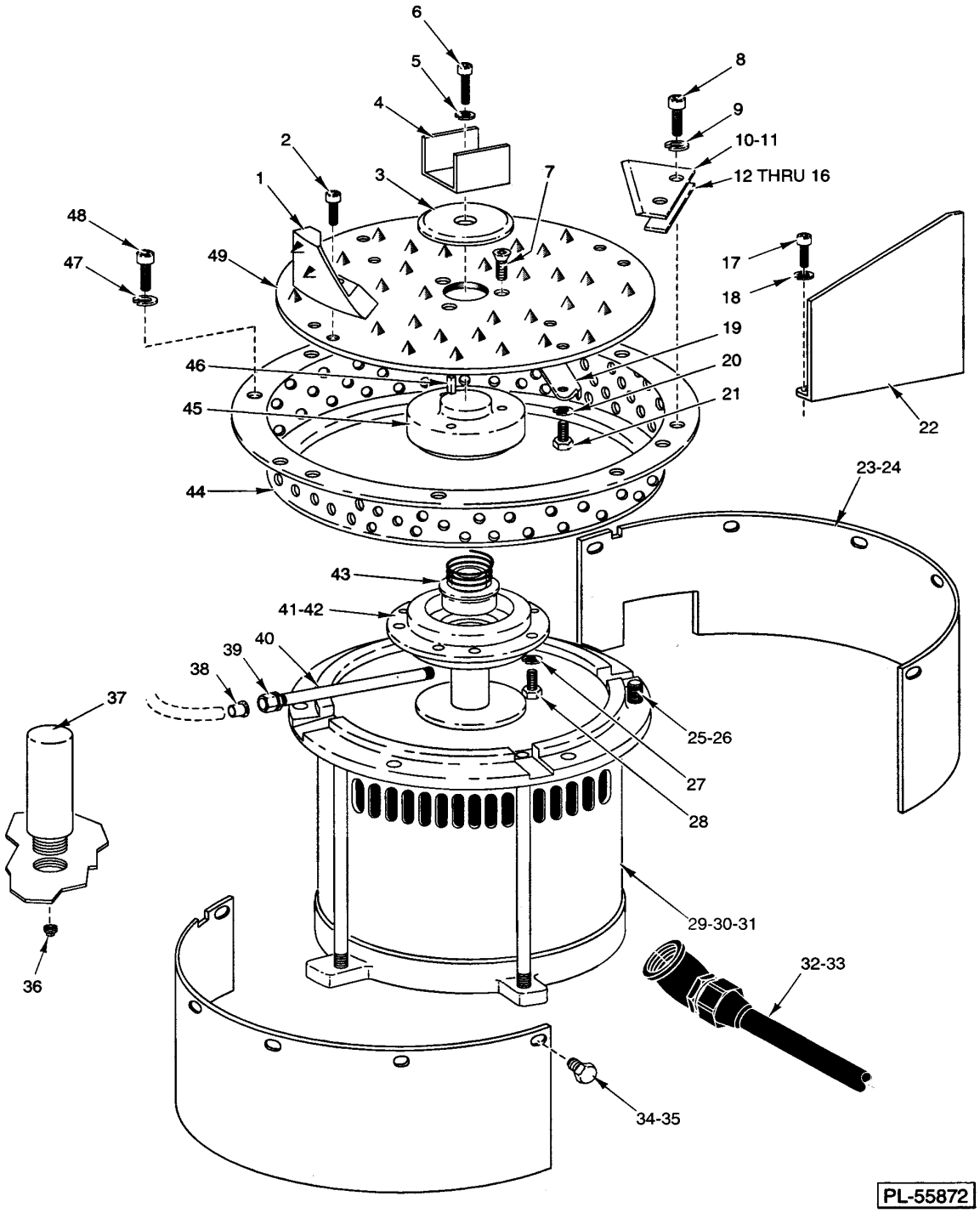

PULPER DRIVE UNIT

PULPER DRIVE UNIT

PULPER DRIVE UNIT

ILLUS. PL-55872	PART NO.	NAME OF PART	AMT.
1	00-749960	Pulsing Vane Wldmnt	2
2	SC-059-36	Cap Screw 3/8-16 x 1 Hex Socket Hd. (SST)	4
3	00-473862	Cap	1
4	00-749976	Cutter - High Bulk	1
5	WL-006-28	Lockwasher 3/8 Helical (SST)	1
6	SC-059-36	Cap Screw 3/8-16 x 1 Hex Socket Hd. (SST)	1
7	SC-110-36	Cap Screw 3/8-16 x 1 Soc. Flat Hd	3
8	SC-059-43	Cap Screw 1/2-13 x 1-1/4 Hex Socket Hd. (SST)	6
9	WL-006-35	Lockwasher 1/2 Light (SST)	6
10	00-748275	Retarder (STD) (22 1/2 Deg.)	3
11	00-473831	Retarder (45 Deg.)	3
12	00-222343-00001	Shim - Retarder (0.040 Thk.)	AR
13	00-222343-00006	Shim - Retarder (0.010 Thk.)	AR
14	00-222343-00002	Shim - Retarder (0.060 Thk.)	AR
15	00-222343-00005	Shim - Retarder (0.005 Thk.)	AR
16	00-222343-00004	Shim - Retarder (0.010 Thk.)	AR
17	SC-059-28	Cap Screw 1/4-20 x 3/8 Hex Socket Hd. (SST)	6
18	WL-006-17	Lockwasher 1/4 Helical (SST)	6
19	00-216933-00002	Vane - Pumping	2
20	WL-006-28	Lockwasher 3/8 Helical (SST)	4
21	SC-041-26	Cap Screw 3/18-16 x 1/2 Hex Hd	4
22	00-216897-00002	Baffle	3
23	00-475265-00002	Motor Splash Shield (L-R)	2
24	00-475265-00003	Motor Splash Shield (R-L)	1
25	SC-041-44	Cap Screw 1/2-13 x 1-1/4 Hex Hd. (SST)	6
26	WL-006-35	Lockwasher 1/2 Light (SST)	6
27	WL-006-17	Lockwasher 1/4 Helical (SST)	4
28	SC-109-47	Cap Screw 1/4-20 x 7/8 Hex Hd. (SST)	4
29	00-473864-00001	Motor - Pulper Drive 5 Hp. (240/480 V., 60 Hz.; 200/380/415 V., 50 Hz.) (3 Ph.)	1
30	00-473864-00002	Motor - Pulper Drive 5 Hp. (208/380 V., 60 Hz.) (3 Ph.)	1
31	00-473864-00003	Motor - Pulper Drive 5 Hp. (575 V., 60 Hz.) (3 Ph.)	1
32	00-436913-00011	Conduit - Liquidtite 1/2	1
33	FE-024-61	Connector 45 Deg. (Non-Metallic) Sealtite (1/2 Male)	1
34	00-081921	Trim - Mach. Screw 10-24 x 1/2 Hex (SST)	6
35	WL-006-07	Lockwasher #10 Helical (SST)	6
36	FP-028-07	Pipe Plug 1/4	1
*37		Pipe - Pressure	1
38	FP-088-23	Fitting - Tube Insert 3/8 x 9/16	1
39	FP-087-85	Fitting - Tube 3/8 x 1/8 FPT	1
40	FP-040-06	Pipe 1/8 x 71/2 TBE	1
41	00-473845-00002	Retainer - Seal	1
42	00-473844	Gasket - Retainer Seal (Mount Between Seal Retainer and Tank Bottom)	1
43	00-223422	Seal - Mechanical	1
44	00-749185	Sizing Ring Assy. (With/Patterned 1/2 & 5/8 Dia. Holes)	1
45	00-473835-00002	Hub - Pulping Disc	1
46	00-222271-00008	Key	1
47	WL-006-28	Lockwasher 3/8 Helical (SST)	6
48	SC-059-36	Cap Screw 3/8-16 x 1 Hex Socket Hd. (SST)	6
49	00-473842-00001	Pulping Disc	1
	00-475276	Kit - Motor Splash Shield	1

* This Item No Longer Available. Order Outside Standpipe Kit 749127 to Convert To New Style.

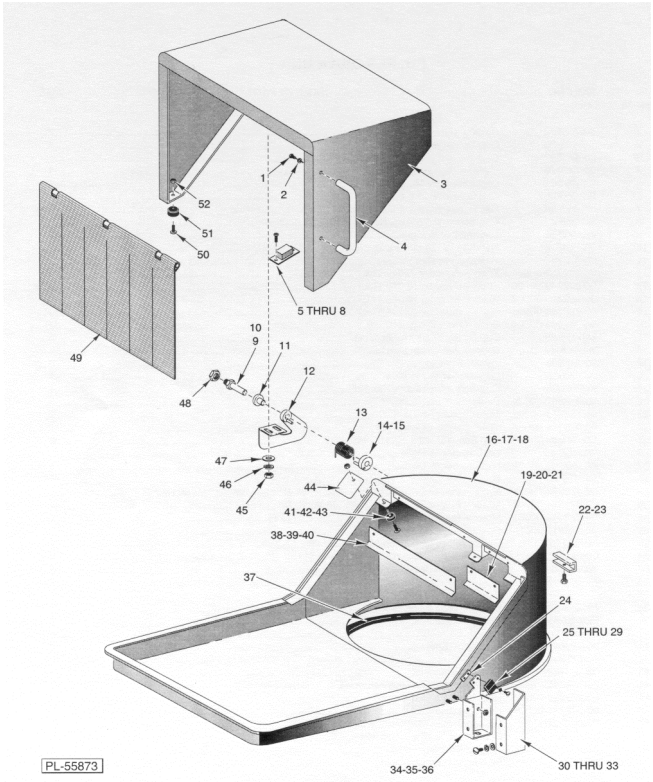

FEED HOOD UNIT

FEED HOOD UNIT

FEED HOOD UNIT

ILLUS. PL-55873	PART NO.	NAME OF PART	AMT.
1	SC-041-05	Cap Screw 1/4-20 x 5/8 Hex Hd	4
2	WL-006-17	Lockwasher 1/4 Helical (SST)	4
3	00-473860	Lid - Feed Hood	1
4	00-473730	Handle	2
5	00-290159	Retainer - Magnet	1
6	00-290160	Magnet	1
7	SC-021-08	Mach. Screw 6-32 x 3/8 Slotted Rd. Hd. (SST)	2
8	NS-031-50	Stop Nut 6-32 Hex (SST)	2
9	WS-006-44	Washer (SST)	4
10	00-473737	Pin - Hinge	2
11	00-473723	Bearing - Oilite	2
12	00-473722	Hinge - Arm	2
13	00-473739	Spring - Torsion	2
14	00-473767	Hub Assy. - Spring	2
15	SC-116-87	Set Screw 14-20 x 1/4 Soc. Hdls., Cup Pt	4
16	00-473620	Hood (Std. Length)	1
17	00-473911	Hood (Short Length)	1
18	00-473913	Hood (Long Length)	1
19	00-748956	Cover - Control Balance (RH)	1
20	SC-093-20	Mach. Screw 1/4-20 x 3/4 Phil. Pan Hd. (SST)	2
21	WL-006-17	Lockwasher 1/4 Helical (SST)	2
22	00-473863	Clamp	8
23	SC-041-13	Cap Screw 5/16-18 x 1 Hex Hd. (SST)	8
24	NS-031-48	Stop - Nut 4-40 Hex (SST)	1
25	00-473109-00002	Switch Assy. - Door	1
26	SC-018-49	Mach. Screw 4-40 x 1/2 Pan Hd	2
27	WL-006-39	Lockwasher #4 Helical (SST)	2
28	FE-006-17	Wire Nut (16-22 Ga.)	2
29	00-294514-00005	Cable - Interlock Cover	1
30	00-473733	Cover - Interlock	1
31	SC-021-22	Mach. Screw 10-24 x 3/8 Slotted Rd. Hd. (SST)	2
32	WL-006-07	Lockwasher #10 Helical (SST)	2
33	WS-028-08	Washer #10 x 0.43 (Zinc Plated) (SST)	2
34	FE-022-06	Strain Relief 90 Deg	1
35	00-473628	Mount - Interlock	1
36	NS-031-16	Stop Nut 10-24 Hex Elastic (SST)	2
37	00-473575	Seal - Transition	1
38	00-748955	Cover - Control Balance (Center)	1
39	SC-093-20	Mach. Screw 1/4-20 x 3/4 Phil. Pan Hd. (SST)	2
40	WL-006-17	Lockwasher 1/4 Helical (SST)	2
41	NS-031-21	Stop Nut 1/4-20 Hex (SST)	2
42	00-473753	Bumper	2
43	SC-093-20	Mach. Screw 1/4-20 x 3/4 Phil. Pan Hd. (SST)	2
44	00-748957	Cover - Counter Balance (LH)	1
45	NS-015-13	Nut 3/8-16 Hex (SST)	4
46	WL-006-28	Lockwasher 3/8 Helical (SST)	4
47	WS-006-44	Washer (SST)	4
48	FP-053-05	Pipe Lock Nut 1/2 NPSL (SST)	2
49	00-474284-00001	Curtain - Feed Hood	2
50	SC-093-20	Mach. Screw 1/4-20 x 3/4 Phil. Pan Hd. (SST)	2
51	00-473753	Bumper	2
52	NS-015-13	Nut 3/8-16 Hex (SST)	2

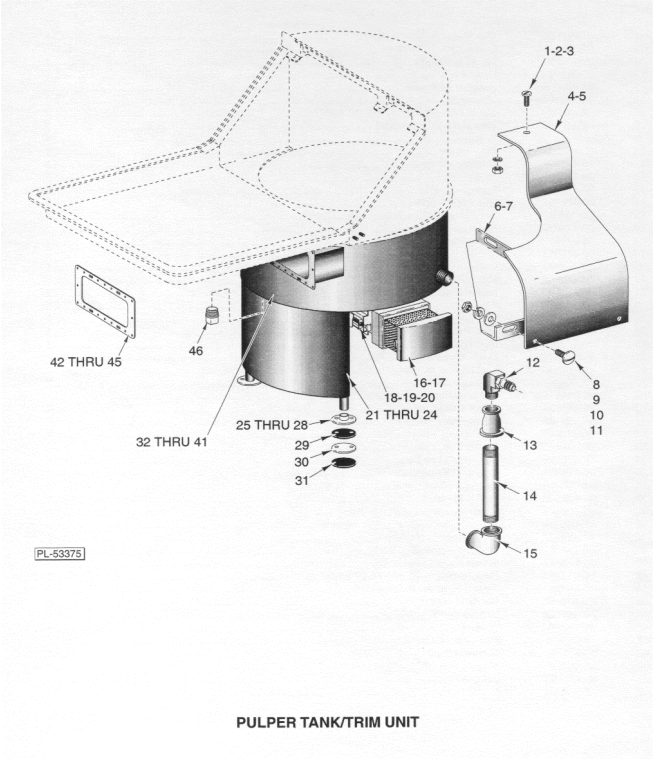

PULPER TANK/TRIM UNIT

PULPER TANK/TRIM UNIT

PULPER TANK/TRIM UNIT

ILLUS. PL-53375	PART NO.	NAME OF PART	AMT.
1	SC-053-41	Mach. Screw 1/4-20 x 1/2 Slotted Truss Hd. (SST)	1
2	WL-006-17	Lockwasher 1/4 Helical (SST)	1
3	NS-015-01	Nut 1/4-20 Hex (SST)	1
4	00-474846-00001	Tank Trim (R-L)	1
5	00-474846-00002	Tank Trim (L-R) (Shown)	1
6	00-474128-00001	Support - Tank Trim (R-L)	1
7	00-474128-00002	Support - Tank Trim (L-R) (Shown)	1
8	SC-053-41	Mach. Screw 1/4-20 x 1/2 Slotted Truss Hd. (SST)	2
9	WS-017-06	Washer (SST)	2
10	WL-006-17	Lockwasher 1/4 Helical (SST)	2
11	NS-015-01	Nut 1/4-20 Hex (SST)	2
12	00-223478	Hose - Barb 1/4 x 90 Deg	1
13	FP-077-39	Coupling - Reducing 3/4 to 1/4	1
14	FP-042-15	Pipe 3/4 x 8-1/2 TBE (Brass)	1
15	FP-015-23	Elbow 3/4 x 90 Deg. (Brass)	1
16	00-473851	Cover - Trash Box	1
17	00-473850	Gasket - Trash Box	1
18	00-473870	Latch - Trash Box	2
19	SC-021-98	Mach. Screw 8-32 x 3/8 Phil. Rd. Hd. (SST)	4
20	WL-006-02	Lockwasher #8 Helical (SST)	4
21	00-473858	Leg Wrap	1
22	SC-041-54	Cap Screw 1/2-13 x 3/4 Hex Hd. (SST)	3
23	WS-008-43	Washer (SST)	6
24	WL-006-35	Lockwasher 1/2 Light (SST)	3
25	00-473869	Foot	4
26	SC-055-27	Set Screw 5/16-24 x 5/16 Hex Hdls., Cup Pt. (SST)	4
27	SC-109-47	Cap Screw 1/4-20 x 7/8 Hex Hd. (SST)	8
28	WL-006-17	Lockwasher 1/4 Helical (SST)	8
29	00-329336-00001	Pad - Rubber Waffle W/Holes	4
30	00-329335	Spacer	4
31	00-329336-00002	Pad - Rubber Waffle W/O Holes	4
32	00-892085-00001	Tank (R-L) (W/O Trough)	1
33	00-892085-00002	Tank (R-L) (W/Trough) (Position 2)	1
34	00-892085-00003	Tank (R-L) (W/Trough) (Position 3)	1
35	00-892085-00004	Tank (R-L) (W/Trough) (Position 4)	1
36	00-892085-00005	Tank (R-L) (W/Trough) (Position 8)	1
37	00-892084-00001	Tank (L-R) (W/O Trough)	1
38	00-892084-00002	Tank (L-R) (W/Trough) (Position 4)	1
39	00-892084-00003	Tank (L-R) (W/Trough) (Position 8)	1
40	00-892084-00004	NLA - Obsolete--Tank (L-R) (W/Trough) (Position 9)	1
41	00-892084-00005	Tank (L-R) (W/Trough) (Position 10)	1
42	00-473834	Trough Gasket (16 1/2)	1
43	00-474186	Trough Gasket (12)	AR
44	00-474194	Trough Gasket (10)	AR
45	00-474193	Trough Gasket (8 3/4)	AR
46	FP-028-28	Pipe Plug 11/2 (Tray Flush Only, Trough Flush Only, Both Tray, & Trough Flush)	1
	00-749127	Kit - Outside Standpipe (Incls. Items 12 thru 15)	1

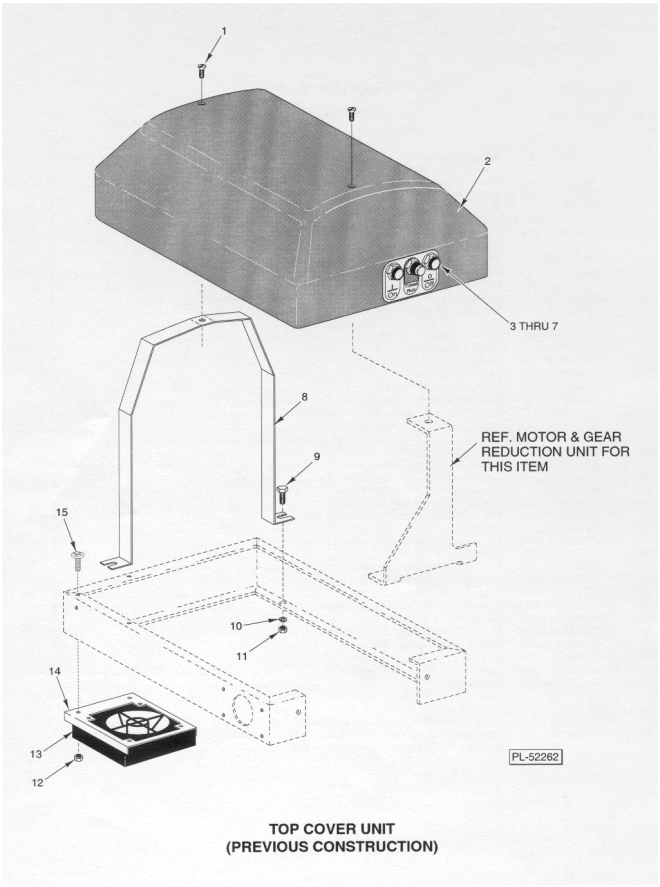

TOP COVER UNIT
(PREVIOUS CONSTRUCTION)

TOP COVER UNIT
(PREVIOUS CONSTRUCTION)

TOP COVER UNIT
(PREVIOUS CONSTRUCTION)

ILLUS. PL-52262	PART NO.	NAME OF PART	AMT.
1	SC-022-43	Mach. Screw 5/16-18 x 1/2 Slotted Flat Hd. (SST)	2
2	00-473875	Cover - Top	1
3	00-087711-161-5	Switch - Pushbutton (W/Clean Cycle)	1
4	00-087711-161-4	Switch - Pushbutton (Start)	1
5	00-087711-161-2	Switch - Pushbutton (Stop)	1
6	00-436380	Plate - Pushbutton (W/O Clean Cycle)	1
7	00-473874	Plate - Pushbutton (W/Clean Cycle)	1
8	00-436375	Support - Utility Tower Top	1
9	SC-041-11	Cap Screw 5/16-18 x 3/4 Hex Hd. (SST)	2
10	WL-006-23	Lockwasher 5/16 Helical (SST)	2
11	NS-015-11	Nut 5/16-18 Hex (SST)	2
12	NS-031-08	Stop Nut 8-32 Special (SST)	6
13	00-122945	Fan - Electric (115 V.)	1
14	00-474811	Support - Fan	1
15	SC-113-36	Mach. Screw 8-32 x 3/4 Phil. Pan Hd. (SST)	6

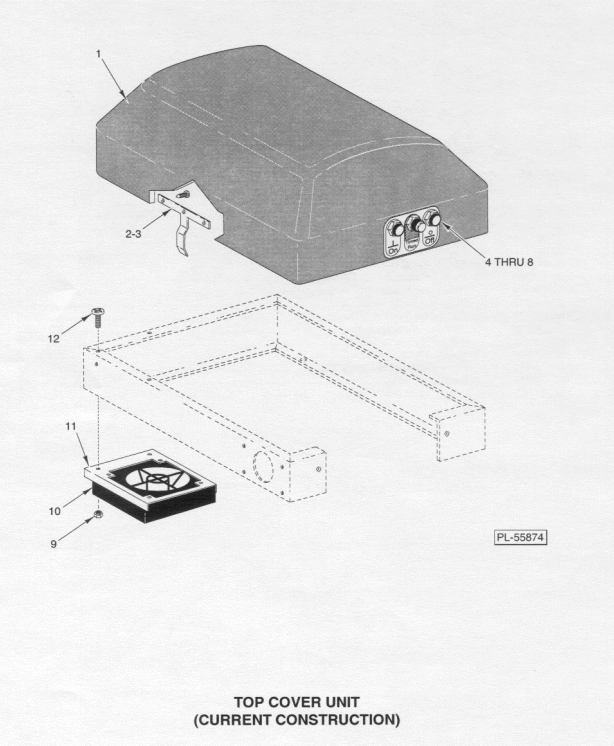

TOP COVER UNIT
(CURRENT CONSTRUCTION)

TOP COVER UNIT
(CURRENT CONSTRUCTION)

TOP COVER UNIT
(CURRENT CONSTRUCTION)

ILLUS. PL-55874	PART NO.	NAME OF PART	AMT.
1	00-473875	Cover - Top	1
2	SD-026-09	Self-Tapping Screw 10-16 x 1/2 Phil. Truss Hd., Type AB	6
3	00-474917	Bracket - Top Cover	2
4	00-087711-161-5	Switch - Pushbutton (W/Clean Cycle)	1
5	00-087711-161-4	Switch - Pushbutton (Start)	1
6	00-087711-161-2	Switch - Push-button	1
7	00-436380	Plate - Pushbutton (W/O Clean Cycle)	1
8	00-473874	Plate - Pushbutton (W/Clean Cycle)	1
9	NS-031-08	Stop Nut 8-32 Special (SST)	6
10	00-122945	Fan - Electric (115 V.)	1
11	00-474811	Support - Fan	1
12	SC-113-36	Mach. Screw 8-32 x 3/4 Phil. Pan Hd. (SST)	6

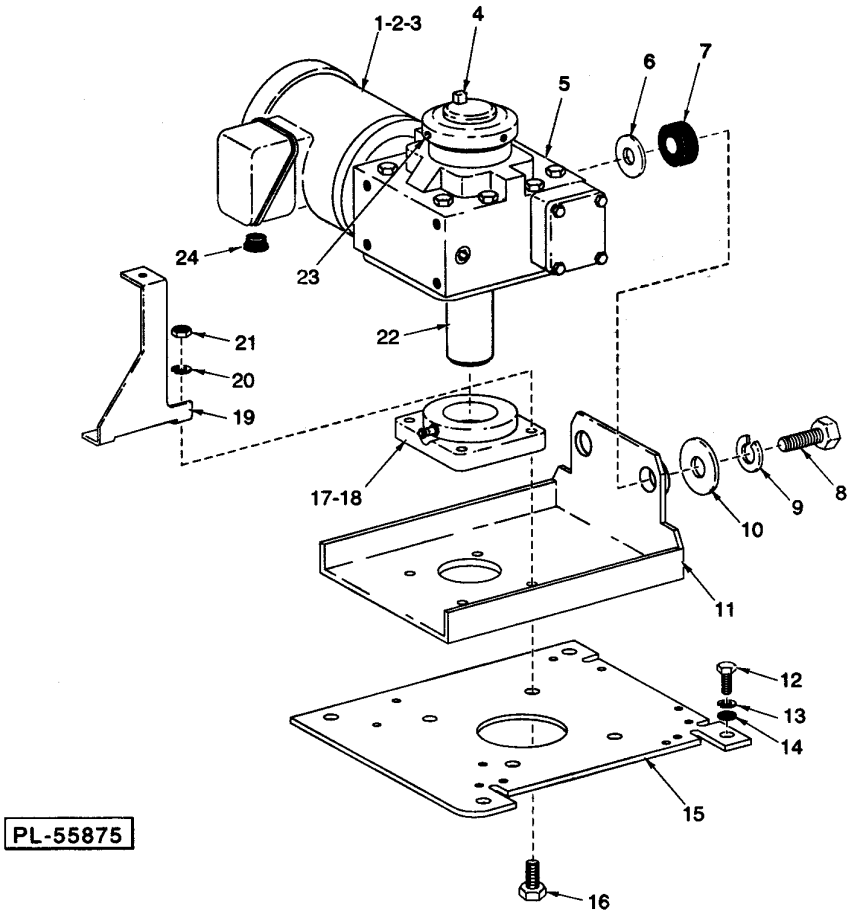

WATERPRESS MOTOR AND SPEED REDUCER UNIT
(PREVIOUS CONSTRUCTION)

WATERPRESS MOTOR AND SPEED REDUCER
(PREVIOUS CONSTRUCTION)

WATERPRESS MOTOR AND SPEED REDUCER (PREVIOUS CONSTRUCTION)

ILLUS. PL-55875	PART NO.	NAME OF PART	AMT.
1	00-474742-00001	Motor (3 Hp.) (208/240/380/480/60/3) (200/380/415/50/3)	1
2	00-474742-00003	Motor (3 Hp.) (575/60/3)	1
3	FE-006-18	Wire Nut (14-22 Ga.) (Use with Items 1 & 2)	4
4	00-012430-00242	Key 3/8 x 1/2 x 3	1
5	00-473990	Reducer - Gear (2 Hp.)	1
6	00-474109	Washer - Isolator	4
7	00-474051	Isolator - Lord	2
8	SC-041-57	Cap Screw 1/2-13 x 2-1/2 Hex Hd. (SST)	2
9	WL-006-36	Lockwasher 1/2	2
10	00-474109	Washer - Isolator	2
11	00-474209	Arm - Torque	1
12	SC-041-28	Cap Screw 3/8-16 x 3/4 Hex Hd. (SST)	4
13	WL-006-28	Lockwasher 3/8 Helical (SST)	4
14	WS-006-44	Washer (SST)	4
15	00-473794	Plate - Reducer	1
16	SC-041-59	Cap Screw 1/2-13 x 1-3/4 Hex Hd. (SST)	4
17	00-473720	Bearing - Ball	1
18	SC-123-59	Set Screw 3/8-24 x 3/8 Hdls. Cup Pt. (SST)	2
19	00-474404	Bracket - Top Cover (Front) (Use to mount Top Cover)	1
20	WL-006-35	Lockwasher 1/2 Light (SST)	4
21	NS-015-20	Nut 1/2-13 Hex	4
22	00-473805	Shaft - Cone	1
23	SC-055-02	Set Screw 1/4-20 x 1/4 Hdls. Cup Pt.	2
24	FE-025-29	Bushing - Electric Snap	1

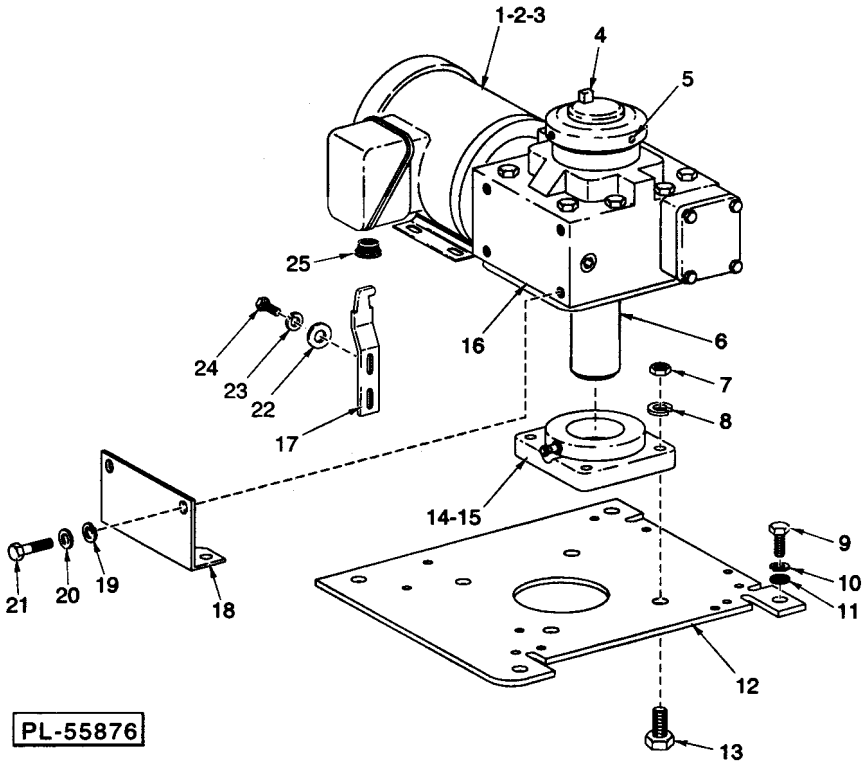

WATERPRESS MOTOR AND SPEED REDUCER UNIT
(CURRENT CONSTRUCTION)

WATERPRESS MOTOR AND SPEED REDUCER
(CURRENT CONSTRUCTION)

WATERPRESS MOTOR AND SPEED REDUCER (CURRENT CONSTRUCTION)

ILLUS. PL-55876	PART NO.	NAME OF PART	AMT.
*1	00-474742-00001	Motor (3 Hp.) (208/240/380/480/60/3) (200/380/415/50/3)	1
*2	00-474742-00003	Motor (3 Hp.) (575/60/3)	2
3	FE-006-18	Wire Nut (14-22 Ga.) (Use with Items 1 & 2)	AR
4	00-012430-00242	Key 3/8 x 1/2 x 3	1
5	SC-055-02	Set Screw 1/4-20 x 1/4 Hdls. Cup Pt.	2
6	00-473805	Shaft - Cone	1
7	NS-015-20	Nut 1/2-13 Hex	4
8	WL-006-35	Lockwasher 1/2 Light (SST)	4
9	SC-041-28	Cap Screw 3/8-16 x 3/4 Hex Hd. (SST)	4
10	WL-006-28	Lockwasher 3/8 Helical (SST)	4
11	WS-006-44	Washer (SST)	4
12	00-473794	Plate - Reducer	1
13	SC-041-59	Cap Screw 1/2-13 x 1-3/4 Hex Hd. (SST)	4
14	00-473720	Bearing - Ball	1
15	SC-123-59	Set Screw 3/8-24 x 3/8 Hdls. Cup Pt. (SST)	2
16	00-473990	Reducer - Gear (2 Hp.)	1
**17		Bracket - Anti-Rotation	1
18	00-748844	Bracket - Anti-Rotation	1
19	WS-008-43	Washer (SST)	2
20	WL-006-35	Lockwasher 1/2 Helical	2
21	SC-041-43	Cap Screw 1/2-13 x 1 Hex Hd. (SST)	2
22	WS-008-48	Washer (SST)	2
23	WL-006-35	Lockwasher 1/2 Light (SST)	2
24	SC-041-73	Cap Screw 1/2-13 x 5/8 Hex Hd. (SST)	2
25	FE-025-29	Bushing - Electric Snap	1

* May Also Need Items 18 Thru 21 When Replacing Motor.
** This Item No Longer Available.

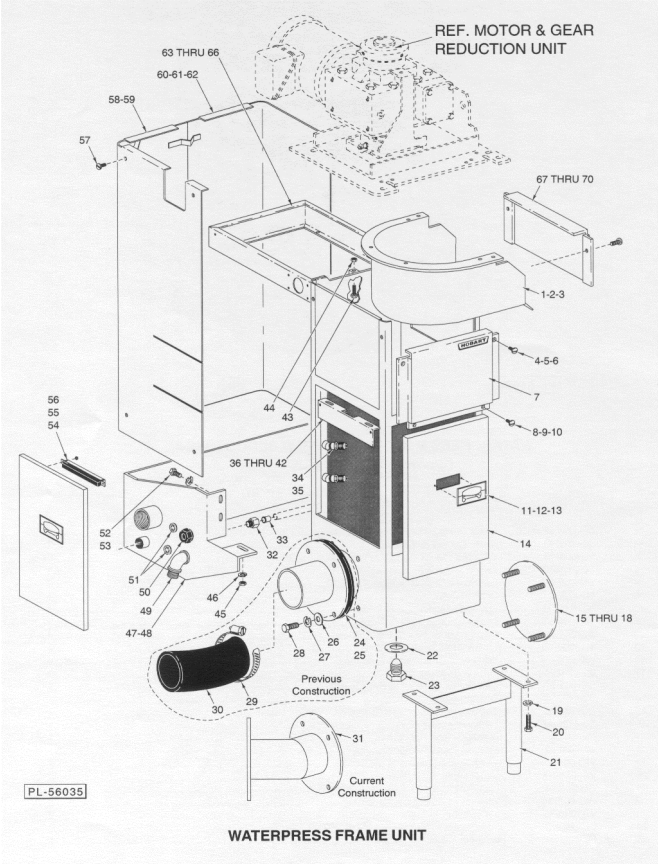

WATERPRESS FRAME UNIT

WATERPRESS FRAME UNIT

WATERPRESS FRAME UNIT

ILLUS. PL-56035	PART NO.	NAME OF PART	AMT.
1	00-473772	Housing - Cone	1
2	SC-041-11	Cap Screw 5/16-18 x 3/4 Hex Hd. (SST)	4
3	WL-006-23	Lockwasher 5/16 Helical (SST)	4
4	SC-053-41	Mach. Screw 1/4-20 x 1/2 Slotted Truss Hd. (SST)	4
5	NS-015-01	Nut 1/4-20 Hex (SST)	4
6	WL-006-17	Lockwasher 1/4 Helical (SST)	4
7	00-473903	Panel - Discharge	2
8	SC-112-03	Mach. Screw 10-24 x 1/2 Slotted Pan Hd	4
9	WL-006-07	Lockwasher #10 Helical (SST)	4
10	NS-046-28	Crown Nut 10-24 High Crown (SST)	6
11	00-474405	Pull - Door	3
12	00-474540	Gasket - Door Pull	3
13	NS-046-28	Crown Nut 10-24 High Crown (SST)	6
14	00-474321	Door	3
15	WS-017-06	Washer (SST)	4
16	WL-006-17	Lockwasher 1/4 Helical (SST)	4
17	NS-015-01	Nut 1/4-20 Hex (SST)	4
18	00-473779	Flange - Blank	1
19	WL-006-28	Lockwasher 3/8 Helical (SST)	4
20	SC-041-28	Cap Screw 3/8-16 x 3/4 Hex Hd. (SST)	4
21	00-474451	Leg - Waterpress Weldment	1
22	00-474398	Gasket - Center	1
23	00-473710	Bearing - Aligning	1
24	00-475723	Gasket - Slurry Inlet	1
25	00-475725	Slurry Inlet Wldmt. (Previous Construction)	1
26	WS-018-40	Washer (SST)	1
27	WL-006-28	Lockwasher 3/8 Helical (SST)	4
28	SC-041-33	Cap Screw 3/8-16 x 1-3/4 Hex Hd. (SST)	4
29	00-473989-00005	Clamp - Hose (Previous Construction)	2
30	00-475726	Hose - Slurry Inlet (Previous Construction)	1
31	00-476864	Slurry Inlet Wldmt. (Current Construction)	1
32	FP-047-09	Fitting - Tube 1/2 TBG x 1/2 MPT	1
33	FP-088-24	Fitting - Tube Insert 1/2	1
34	00-473783	Nozzle	12
35	FP-015-02	Elbow - Pipe 1/8 x 45 Deg. Street	12
36	00-473781	Housing - Door Magnet	3
37	00-329224	Magnet - Door (Ceramic)	3
38	NS-031-16	Stop Nut 10-24 Hex Elastic (SST)	6
39	00-436344	Panel - Door Top	3
40	WS-017-06	Washer (SST)	6
41	WL-006-17	Lockwasher 1/4 Helical (SST)	6
42	NS-015-01	Nut 1/4-20 Hex (SST)	6
43	SC-123-61	Cap Screw 1/2-13 x 2 Hex Hd	1
44	NS-015-20	Nut 1/2-13 Hex (Position on top of bracket)	1
45	WL-006-23	Lockwasher 5/16 Helical (SST)	2
46	NS-015-11	Nut 5/16-18 Hex (SST)	2
47	00-474452-00001	Manifold - Lower Trim (R-L)	1
48	00-474452-00002	Manifold - Lower Trim (L-R) (Shown)	1
49	FE-024-61	Connector 45 Deg. (Non-Metallic) Sealtite (1/2 Male)	1
50	FE-022-84	Connector - Strain Relief	1
51	FE-025-29	Bushing-Electric Snap	2
52	SC-041-73	Cap Screw 1/2-13 x 5/8 Hex Hd. (SST)	4
53	WL-006-35	Lockwasher 1/2 Light (SST)	4
54	00-473781	Housing - Door Magnet	3
55	00-329224	Magnet - Door (Ceramic)	3

WATERPRESS FRAME UNIT

ILLUS. PL-56035	PART NO.	NAME OF PART	AMT.
56	NS-031-16	Stop Nut 10-24 Hex Elastic (SST)	6
57	SC-053-16	Mach. Screw 5/16-18 x 5/8 Truss Hd	4
58	00-473811	Utility Tower W/Slots (R-L)	1
59	00-473890	Utility Tower W/Slots (L-R) (Shown)	1
60	SC-053-16	Mach. Screw 5/16-18 x 5/8 Truss Hd	4
61	00-473892	Utility Tower W/O Slots (L-R) (Shown)	1
62	00-473891	Utility Tower W/O Slots (R-L)	1
63	00-474317	Support - Utility Tower Top	1
64	SC-041-10	Cap Screw 5/16-18 x 5/8 Hex Hd. (SST)	2
65	WL-006-23	Lockwasher 5/16 Helical (SST)	2
66	NS-015-11	Nut 5/16-18 Hex (SST)	2
67	00-474257	Panel - Chute	1
68	SC-053-41	Mach. Screw 1/4-20 x 11/2 Truss Hd. (SST)	2
69	WL-006-17	Lockwasher 1/4 Helical (SST)	2
70	NS-015-01	Nut 1/4-20 Hex (SST)	2

NOTES

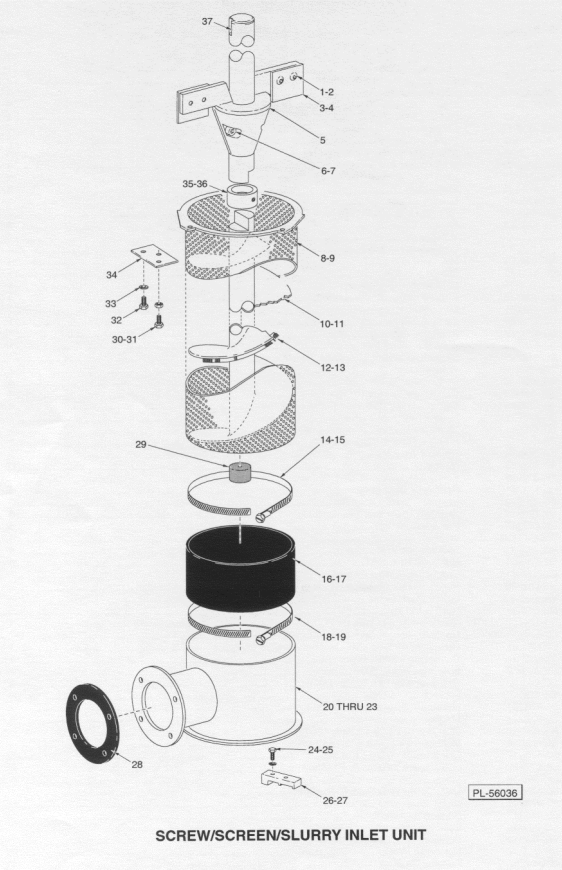

SCREW/SCREEN/SLURRY INLET UNIT

SCREW/SCREEN/SLURRY INLET UNIT

SCREW/SCREEN/SLURRY INLET UNIT

ILLUS. PL-56036	PART NO.	NAME OF PART	AMT.
1	SC-041-11	Cap Screw 5/16-18 x 3/4 Hex Hd. (SST)	4
2	WL-006-23	Lockwasher 5/16 Helical (SST)	4
3	00-474823	Plate - Wiper (WS800) (Not Shown)	2
4	00-222361-00006	Plate - Wiper (WS1000) (Shown)	2
5	00-474581-00002	Cone - Compression	1
6	SC-123-15	Cap Screw 3/8-16 x 2 3/4 Soc. Hex Hd	2
7	NS-031-33	Stop Nut 3/8-16 Hex Elastic (SST)	2
8	00-474440	Screen Assy. (6") (Perforated) (WS800)	1
9	00-474441	Screen Assy. (9") (Perforated) (WS1000)	1
10	00-436387	Screw Assy. (6") (Incls. Items 12 & 29) (WS800)	1
11	00-473798	Screw Assy. (9") (Incls. Items 13 & 29) (WS1000)	1
12	00-222562-00015	Brush - Flight (6") (WS800)	1
13	00-222562-00014	Brush - Flight (9") (WS1000)	1
14	00-473989-00004	Clamp - Hose (6") (WS800)	1
15	00-473989-00003	Clamp - Hose (9") (WS1000)	1
16	00-436384	Boot - Screen (6") (WS800)	1
17	00-473814	Boot - Screen (9") (WS1000)	1
18	00-473989-00004	Clamp - Hose (6") (WS800)	1
19	00-473989	Clamp - Hose (9") (WS1000)	1
*20	00-475430	Slurry (6") (WS800)	1
*21	00-475432	Slurry (9") (WS1000)	1
**22	00-473928	Slurry (6") (WS800)	1
**23	00-473806	Slurry (9") (WS1000)	1
24	SC-041-12	Cap Screw 5/16-18 x 7/8 Hex Hd. (SST)	4
25	WL-006-23	Lockwasher 5/16 Helical (SST)	4
*26	00-475433	Clamp - Slurry	1
**27	00-474395	Clamp - Slurry Can	4
28	00-288425	Gasket	1
29	00-473799	Bearing - Insert	1
30	SC-041-13	Cap Screw 5/16-18 x 1 Hex Hd. (SST)	1
31	NS-018-06	Jam Nut 5/16-18 Hex (SST)	2
32	SC-041-11	Cap Screw 5/16-18 x 3/4 Hex Hd. (SST)	6
33	WL-006-23	Lockwasher 5/16 Helical (SST)	6
34	00-474256	Plate - Screen	3
35	00-473775	Coupling - Shaft	1
36	SC-123-59	Set Screw 3/8-24 x 3/8 Hdls., Cup Pt. (SST)	2
37	00-473805	Shaft - Cone	1

* Used on Machines After 8/05/97.
** Used on Machines Prior to 8/05/97.

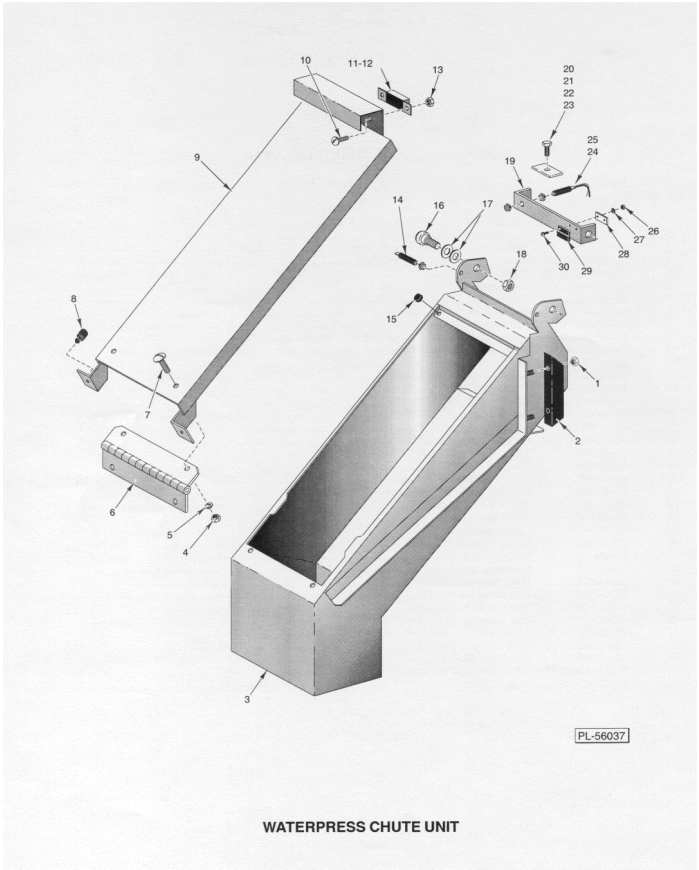

WATERPRESS CHUTE UNIT

WATERPRESS CHUTE UNIT

WATERPRESS CHUTE UNIT

ILLUS. PL-56037	PART NO.	NAME OF PART	AMT.
1	NS-031-16	Stop Nut 10-24 Hex Elastic (SST)	4
2	00-473902	Stop - Rubber	2
3	00-473907	Chute	1
4	NS-015-01	Nut 1/4-20 Hex (SST)	4
5	WL-006-17	Lockwasher 1/4 Helical (SST)	4
6	00-474450	Hinge - Continuous	1
7	SC-053-41	Mach. Screw 1/4-20 x 1/2 Slotted Truss Hd. (SST)	4
8	00-473920	Bumper	2
9	00-474552	Lid - Chute	1
10	SC-021-08	Mach. Screw 6-32 x 3/8 Slotted Rd. Hd. (SST)	2
11	00-290159	Retainer - Magnet	1
12	00-290160	Magnet	1
13	NS-031-50	Stop Nut 6-32 Hex (SST)	2
14	00-474555-00002	Switch - Actuator (Barrell)	1
15	00-473920	Bumper	2
16	SC-086-06	Shoulder Screw 3/8 Dia. x 1/4 Lg. 5/16-18 Hex Socket Hd	2
17	00-474447	Thrust Bearing - Oilite	4
18	NS-018-06	Jam Nut 5/16-18 Hex (SST)	2
19	00-474449	Hinge - Chute	1
20	00-474556	Block - Hinge Chute	2
21	SC-041-12	Cap Screw 5/16-18 x 7/8 Hex Hd. (SST)	2
22	WL-006-23	Lockwasher 5/16 Helical (SST)	2
23	NS-015-11	Nut 5/16-18 Hex (SST)	2
24	00-474555-00001	Switch - Sensor (Barrell)	1
25	FE-006-17	Wire Nut (16-22 Ga.)	3
26	NS-031-48	Stop Nut 4-40 Hex (SST)	2
27	WL-006-39	Lockwasher #4 Helical (SST)	2
*28		Plate - Interlock Nut	1
29	00-473109-00002	Switch Assy. - Door	1
30	SC-018-49	Mach. Screw 4-40 x 1/2 Pan Hd	2

* Longer Available, Use Item 26.

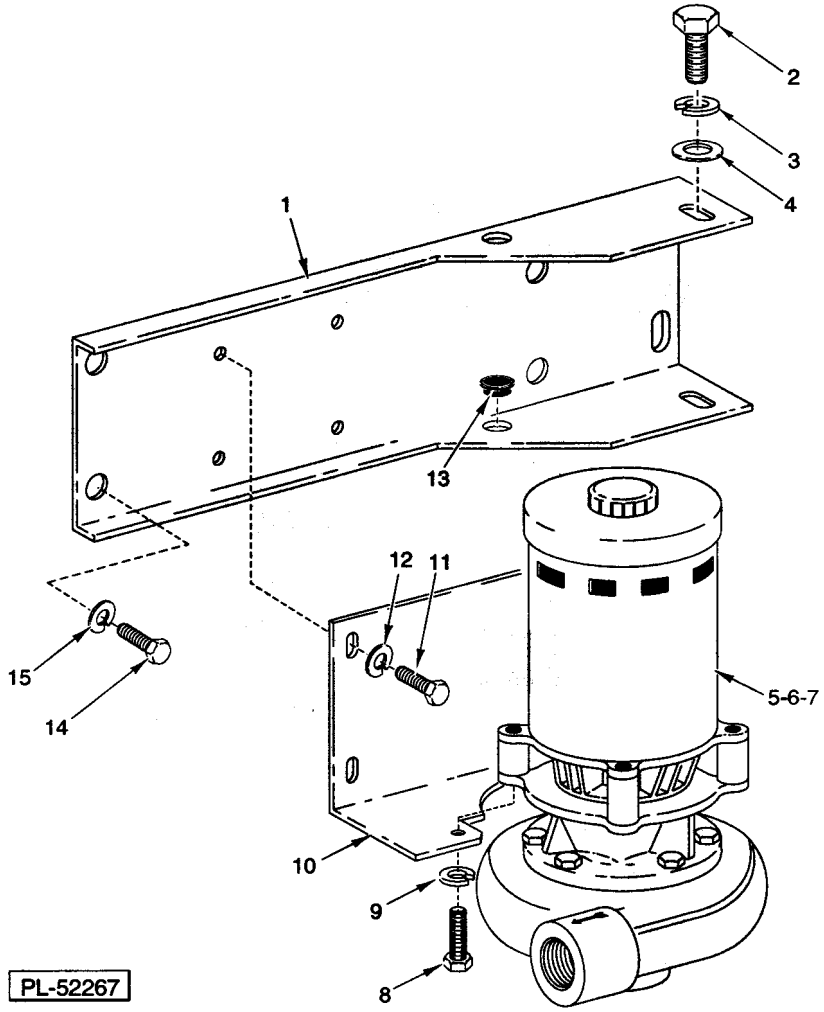

RECIRCULATING PUMP AND MOTOR

RECIRCULATING PUMP AND MOTOR

ILLUS. PL-52267	PART NO.	NAME OF PART	AMT.
1	00-474845	Connector	1
2	SC-041-54	Cap Screw 1/2-13 x 3/4 Hex Hd. (SST)	4
3	WL-006-35	Lockwasher 1/2 Light (SST)	4
4	WS-008-48	Washer (SST)	4
5	00-474124-00001	Motor 3/4 Hp. (208/240/380/480 V., 60 Hz., 3 Ph.) (200/380/415 V., 50 Hz.,3 Ph.)	1
6	00-474124-00003	Motor 3/4 Hp. (575 V., 60 Hz., 3 Ph.)	1
7	FE-006-18	Wire Nut (14-22 Ga.) (Use with Items 5 & 6)	AR
8	SC-041-31	Cap Screw 3/8-16 x 11/4 Hex Hd	4
9	WL-006-28	Lockwasher 3/8 Helical (SST)	4
10	00-436326	Plate - Pump Mounting	1
11	SC-067-23	Mach. Screw 5/16-18 x 3/8 Hex Hd. (SST)	4
12	WL-006-23	Lockwasher 5/16 Helical (SST)	4
13	FE-025-29	Bushing - Electric Snap	2
14	SC-041-73	Cap Screw 1/2-13 x 5/8 Hex Hd. (SST)	4
15	WL-006-35	Lockwasher 1/2 Light (SST)	4

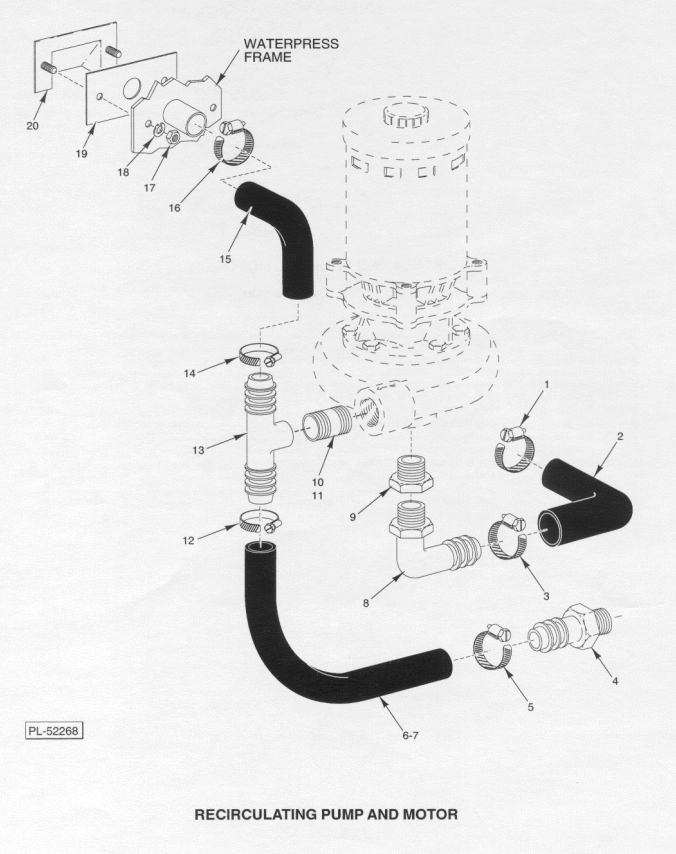

RECIRCULATING PUMP AND MOTOR

RECIRCULATING PUMP AND MOTOR

RECIRCULATING PUMP AND MOTOR

ILLUS. PL-52268	PART NO.	NAME OF PART	AMT.
1	00-534651	Clamp - Hose (#32 Worm Drive)	1
2	00-473880	Hose - Pump	1
3	00-534651	Clamp - Hose (#32 Worm Drive)	1
4	FP-087-91	Fitting - Hose 1 1/2 I.D. x 1 1/2 MPT	1
5	00-534651	Clamp - Hose (#32 Worm Drive)	1
6	00-474205	Hose - Return (L-R) (Shown)	1
7	00-473880-00002	Hose - Return (R-L)	1
8	FP-087-92	Elbow - 90 Deg. 11/2 x 11/2 MPT	1
9	FP-088-09	Bushing - Pipe Reducing 2 to 1 1/2	1
10	00-474448	Pump - Outlet Orifice (Use with Tray Flush Only, Trough Flush Only, or W/O)	1
11	FP-054-58	Pipe 11/2 I.D. x 13/4 TBE (SST) (Use with Tray Flush and Trough Flush)	1
12	00-534651	Clamp - Hose (#32 Worm Drive)	1
13	FP-088-07	Fitting - Hose 1 1/2 Hose x 1 1/2 FPT x 1 1/2 Hose	1
14	00-534651	Clamp - Hose (#32 Worm Drive)	1
15	00-474205-00002	Hose - Bypass	1
16	00-534651	Clamp - Hose (#32 Worm Drive)	1
17	NS-015-11	Nut 5/16-18 Hex (SST)	2
18	WL-006-23	Lockwasher 5/16 Helical (SST)	2
19	00-474178	Orifice - Bypass	1
20	00-474149	Baffle - Bypass	1

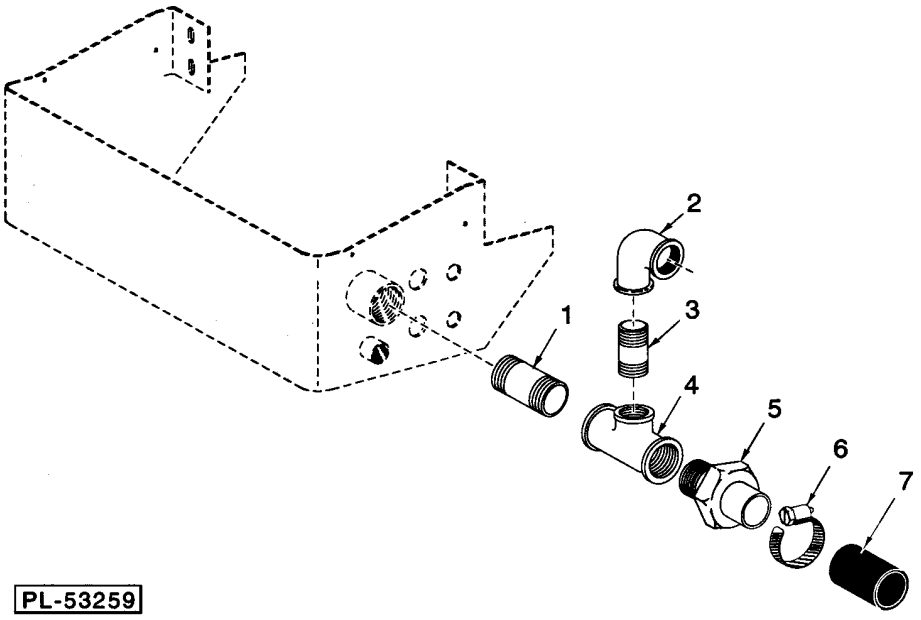

RECIRCULATING LINES
(TRAY FLUSH AND TROUGH FLUSH)

RECIRCULATING LINES
(TRAY FLUSH AND TROUGH FLUSH)

RECIRCULATING LINES
(TRAY FLUSH AND TROUGH FLUSH)

ILLUS. PL-53259	PART NO.	NAME OF PART	AMT.
1	FP-039-58	Pipe 1 1/2 x 1 3/4 TBE	1
2	FP-014-31	Elbow - Pipe 1 1/2 x 90 Deg	1
3	FP-039-58	Pipe 1 1/2 x 1 3/4 TBE	1
4	FP-019-54	Tee - Pipe 1 1/2 x 1 1/2 x 1 1/2	1
5	FP-087-91	Fitting - Hose 1 1/2 I.D. x 1 1/2 MPT	1
6	00-534651	Clamp - Hose (#32 Worm Drive)	2
7	00-545655	Hose	AR

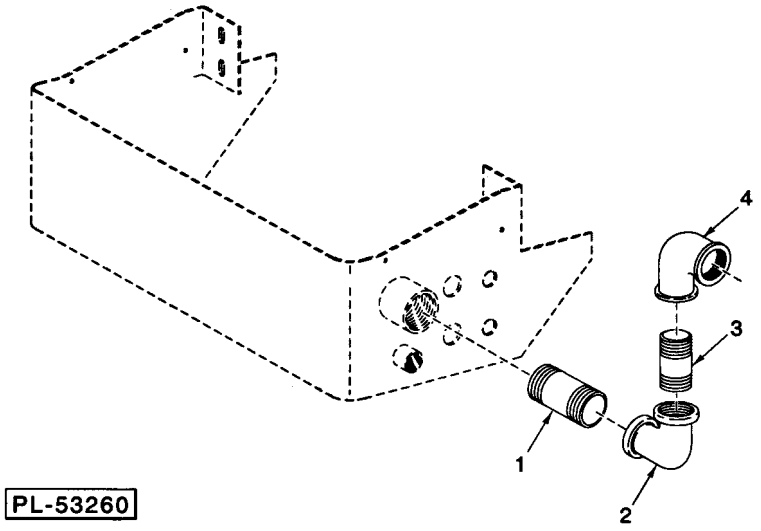

RECIRCULATING LINES
(TROUGH FLUSH)

RECIRCULATING LINES
(TROUGH FLUSH)

RECIRCULATING LINES
(TROUGH FLUSH)

ILLUS. PL-53260	PART NO.	NAME OF PART	AMT.
1	FP-039-58	Pipe 1 1/2 x 1 3/4 TBE	1
2	FP-014-31	Elbow - Pipe 1 1/2 x 90 Deg	1
3	FP-039-58	Pipe 1 1/2 x 1 3/4 TBE	1
4	FP-014-31	Elbow - Pipe 1 1/2 x 90 Deg	1

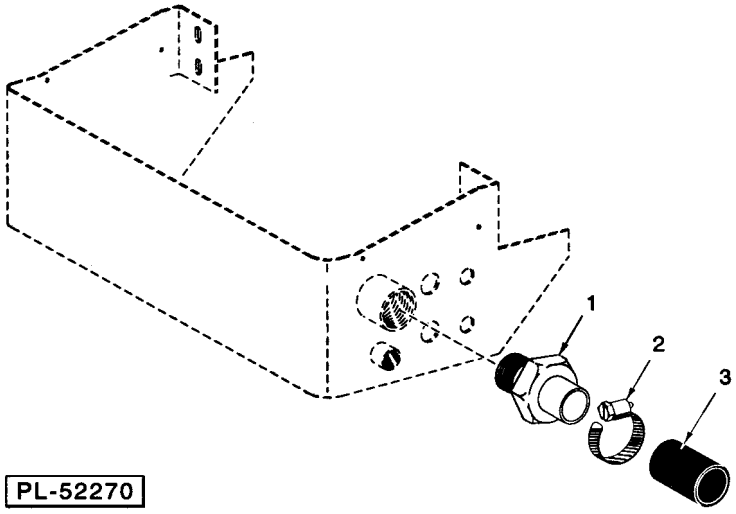

RECIRCULATING LINE UNIT
(TRAY FLUSH ONLY)

RECIRCULATING LINE UNIT
(TRAY FLUSH ONLY)

RECIRCULATING LINE UNIT
(TRAY FLUSH ONLY)

ILLUS. PL-52270	PART NO.	NAME OF PART	AMT.
1	FP-087-91	Fitting - Hose 1 1/2 I.D. x 1 1/2 MPT	1
2	00-534651	Clamp - Hose (#32 Worm Drive)	2
3	00-545655	Hose	AR

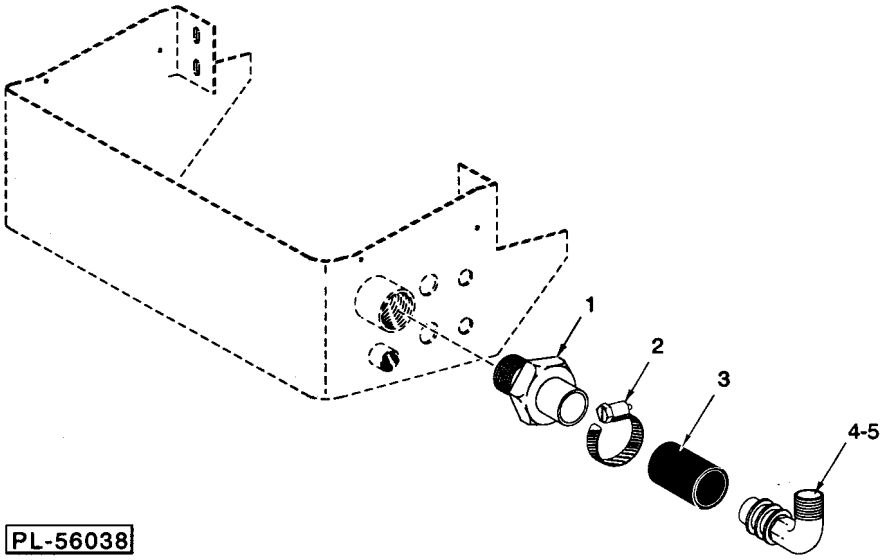

RECIRCULATING LINE UNIT
(W/O TRAY FLUSH OR TROUGH FLUSH)

RECIRCULATING LINE UNIT
(W/O TRAY FLUSH OR TROUGH FLUSH)

RECIRCULATING LINE UNIT
(W/O TRAY FLUSH OR TROUGH FLUSH)

ILLUS. PL-56038	PART NO.	NAME OF PART	AMT.
1	FP-087-91	Fitting - Hose 1 1/2 I.D. x 1 1/2 MPT	1
2	00-534651	Clamp - Hose (#32 Worm Drive)	2
3	00-545655	Hose	AR
4	FP-087-92	Elbow - 90 Deg. 11/2 x 11/2 MPT (Previous Construction)	1
5	FP-089-98	Fitting - Hose (1 1/2 I.D. x 1 1/2 FPT) (Current Construction)	1

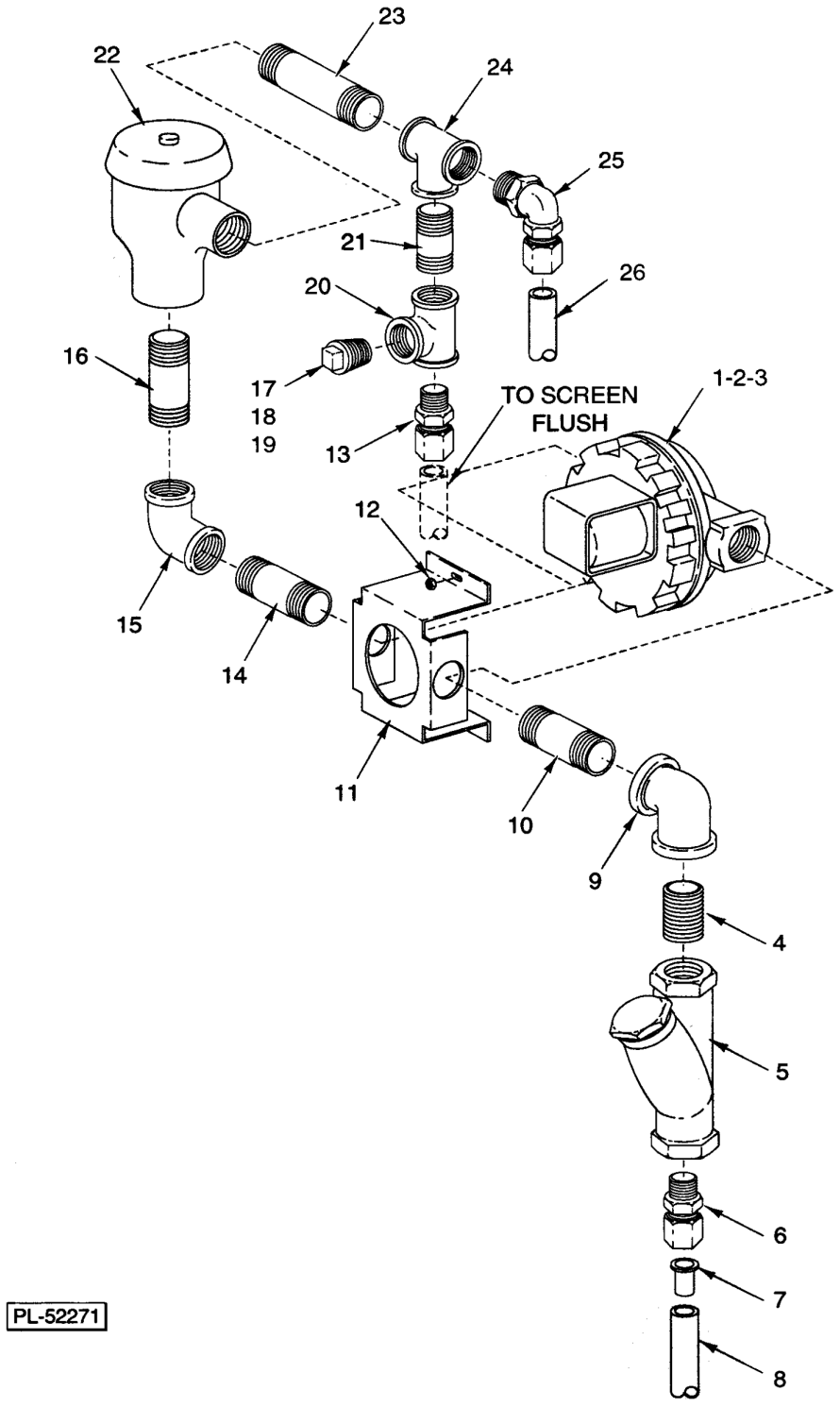

FILL PIPING UNIT
(R-L)

FILL PIPING UNIT (R-L)

FILL PIPING UNIT (R-L)

ILLUS. PL-52271	PART NO.	NAME OF PART	AMT.
1	00-329972-00001	Valve - Solenoid 1/2	1
2	00-270380	Coil - Solenoid Valve	1
3	00-271837	Service Kit - 1/2 Solenoid Valve	1
4	FP-040-42	Pipe 1/2 x 11/8 TBE	1
5	00-102515	Line Strainer 1/2	1
6	FP-047-09	Fitting - Tube 1/2 TBG x 1/2 MPT	1
7	FP-088-24	Fitting - Tube Insert 1/2	1
8	00-501218	Plastic Tube 1/2 O.D.	AR
9	FP-015-16	Elbow - Pipe 1/2 x 90 Deg	1
10	FP-040-50	Pipe 1/2 x 2	1
11	00-474204	Bracket - Valve	1
12	NS-031-21	Stop Nut 1/4-20 Hex (SST)	2
13	FP-088-05	Fitting - Plastic Tube Male Connector	1
14	FP-040-50	Pipe 1/2 x 2	1
15	FP-015-16	Elbow - Pipe 1/2 x 90 Deg	1
16	FP-040-50	Pipe 1/2 x 2	1
17	FP-028-15	Plug 1/2 Pipe (Shown) (Use W/O Chemical Pump)	1
18	FP-088-02	Fitting - Plastic Tube (Not Shown) (Use W/Chemical Pump)	1
19	00-500238	Plastic Tube 3/8 O.D. (Not Shown) (Use W/Chemical Pump)	AR
20	FP-019-21	Tee 1/2 x 1/2 x 1/2 Compression Fitting	1
21	FP-040-42	Pipe 1/2 x 11/8 TBE	1
22	00-292909	Vacuum Breaker (1/2)	1
23	FP-043-36	Pipe 1/2 x 63/4	1
24	FP-019-21	Tee 1/2 x 1/2 x 1/2 Compression Fitting	1
25	FP-088-02	Fitting - Plastic Tube	1
26	00-500238	Plastic Tube 33/8 O.D.	AR

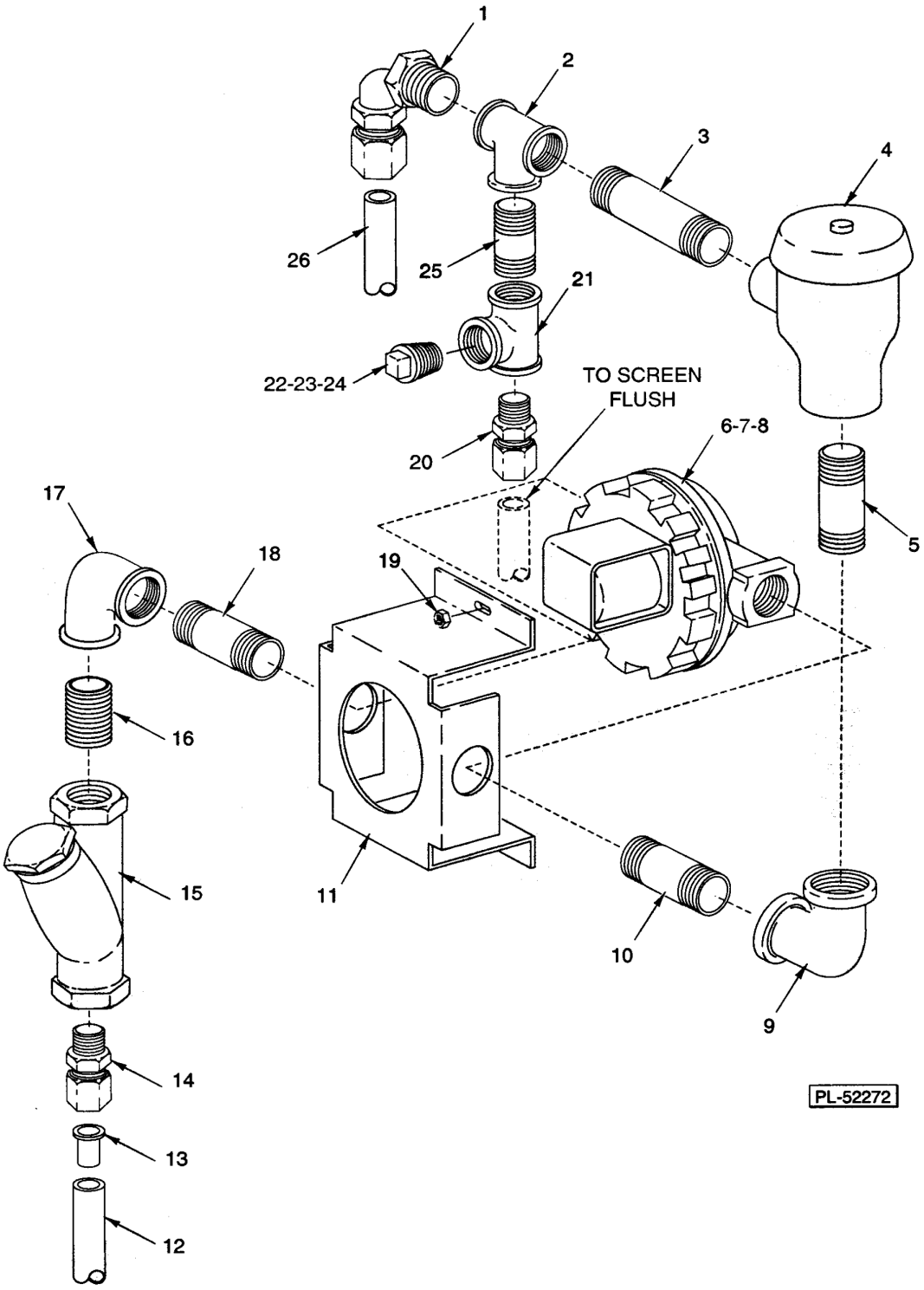

FILL PIPING UNIT
(L-R)

FILL PIPING UNIT (L-R)

FILL PIPING UNIT (L-R)

ILLUS. PL-52272	PART NO.	NAME OF PART	AMT.
1	FP-088-02	Fitting - Plastic Tube	1
2	FP-019-21	Tee 1/2 x 1/2 x 1/2 Compression Fitting	1
3	FP-043-36	Pipe 1/2 x 63/4	1
4	00-292909	Vacuum Breaker (1/2)	1
5	FP-040-50	Pipe 1/2 x 2	1
6	00-329972-00001	Valve - Solenoid 1/2	1
7	00-270380	Coil - Solenoid Valve	1
8	00-271837	Service Kit - 1/2 Solenoid Valve	1
9	FP-015-16	Elbow - Pipe 1/2 x 90 Deg	1
10	FP-040-50	Pipe 1/2 x 2	1
11	00-474204	Bracket - Valve	1
12	00-501218	Plastic Tube 1/2 O.D.	AR
13	FP-088-24	Fitting - Tube Insert 1/2	1
14	FP-047-09	Fitting - Tube 1/2 TBG x 1/2 MPT	1
15	00-102515	Line Strainer 1/2	1
16	FP-040-42	Pipe 1/2 x 11/8 TBE	1
17	FP-015-16	Elbow - Pipe 1/2 x 90 Deg	1
18	FP-040-50	Pipe 1/2 x 2	1
19	NS-031-21	Stop Nut 1/4-20 Hex (SST)	2
20	FP-088-05	Fitting - Plastic Tube Male Connector	1
21	FP-019-21	Tee 11/2 x 1/2 x 1/2 Compression Fitting	1
22	FP-028-15	Plug 1/2 Pipe (Shown) (Use W/O Chemical Pump)	1
23	FP-088-02	Fitting - Plastic Tube (Not Shown) (Use W/Chemical Pump)	1
24	00-500238	Plastic Tube 3/8 O.D. (Not Shown) (Use W/Chemical Pump)	AR
25	FP-040-42	Pipe 1/2 x 11/8 TBE	1
26	00-500238	Plastic Tube 3/8 O.D.	AR

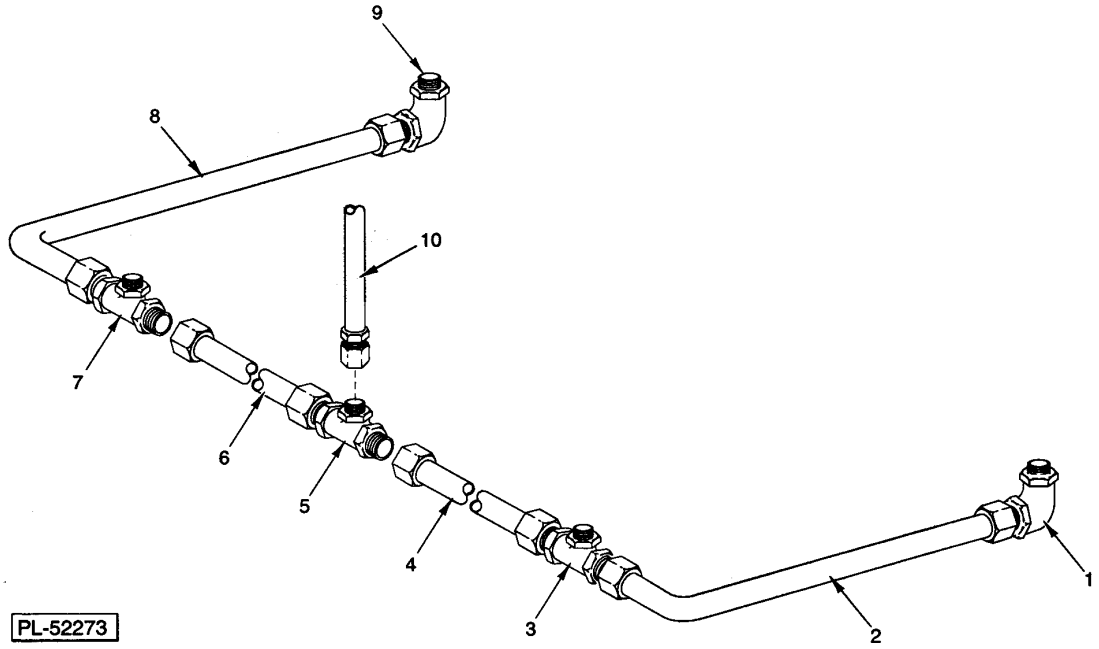

SCREEN FLUSH/FILL PIPING

SCREEN FLUSH/FILL PIPING

SCREEN FLUSH/FILL PIPING

ILLUS. PL-52273	PART NO.	NAME OF PART	AMT.
1	FP-088-03	Elbow 90 Deg. x 1/2 x 3/8 MPT	1
2	00-501218	Plastic Tube 1/2 O.D.	AR
3	FP-088-04	Tee 1/2 x 3/8 MPT x 1/2	1
4	00-501218	Plastic Tube 1/2 O.D.	AR
5	FP-088-06	Tee 1/2 x 1/2 x 1/2	1
6	00-501218	Plastic Tube 1/2" O.D.	AR
7	FP-088-04	Tee 1/2 x 3/8 MPT x 1/2	1
8	00-501218	Plastic Tube 1/2 O.D.	AR
9	FP-088-03	Elbow 90 Deg. x 1/2 x 3/8 MPT	1
10	00-501218	Plastic Tube 1/2 O.D.	AR

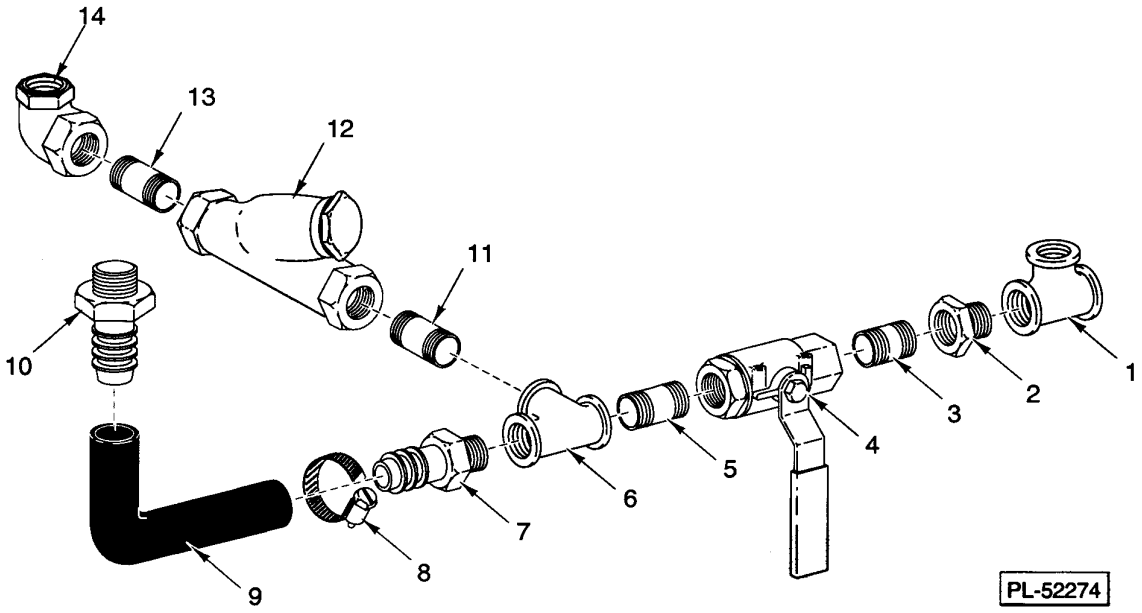

DRAIN PIPING UNIT
(R-L) (SINGLE VALVE DRAIN SYSTEM)
(PREVIOUS CONSTRUCTION)

DRAIN PIPING UNIT
(R-L)
(SINGLE VALVE DRAIN SYSTEM)
(PREVIOUS CONSTRUCTION)

DRAIN PIPING UNIT
(R-L)
(SINGLE VALVE DRAIN SYSTEM)
(PREVIOUS CONSTRUCTION)

ILLUS. PL-52274	PART NO.	NAME OF PART	AMT.
1	FP-019-63	Pipe Tee 2 x 2 x 2	1
2	FP-088-09	Bushing - Pipe Reducing 2 to 1 1/2	1
3	FP-039-58	Pipe 1 1/2 x 1 3/4 TBE	1
4	00-287826-00001	Valve - Ball	1
5	FP-080-61	Pipe 1 1/2 x 2 3/4 TBE	1
6	FP-019-54	Tee - Pipe 1 1/2 x 1 1/2 x 1 1/2	1
7	FP-087-91	Fitting - Hose 1 1/2 I.D. x 1 1/2 MPT	1
8	00-534651	Clamp - Hose (#32 Worm Drive)	2
9	00-474575-00004	Hose	1
10	FP-087-91	Fitting - Hose 1 1/2 I.D. x 1 1/2 MPT	1
11	FP-039-59	Pipe 1 1/2 x 2 TBE	1
12	FP-088-19	Check Valve 1 1/2 (Y-Pattern)	1
13	FP-039-58	Pipe 1 1/2 x 1 3/4 TBE	1
14	FP-088-08	Union - Pipe Elbow 1 1/2 x 90 Deg. (Ground Seat)	1

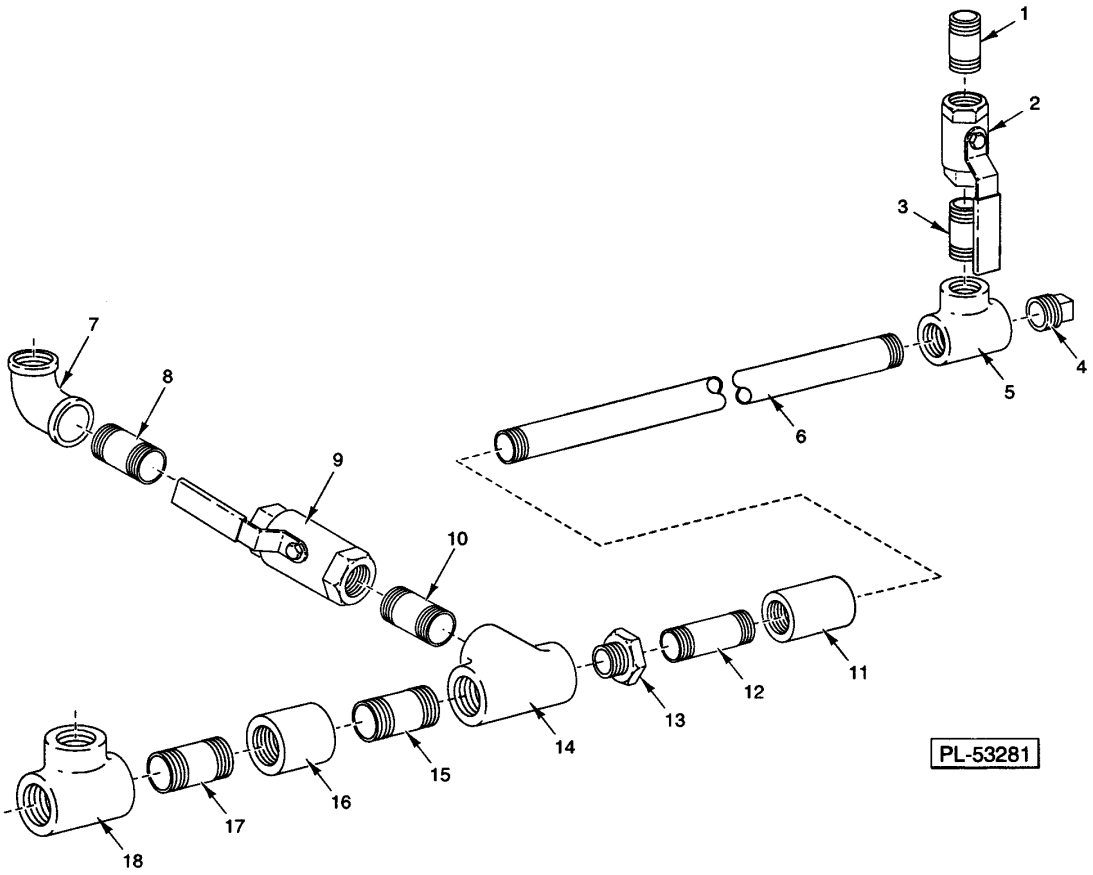

DRAIN PIPING UNIT
(R-L) (DOUBLE VALVE DRAIN SYSTEM)
(CURRENT CONSTRUCTION)

DRAIN PIPING UNIT
(R-L)
(SINGLE VALVE DRAIN SYSTEM)
(CURRENT CONSTRUCTION)

DRAIN PIPING UNIT
(R-L)
(SINGLE VALVE DRAIN SYSTEM)
(CURRENT CONSTRUCTION)

ILLUS. PL-53281	PART NO.	NAME OF PART	AMT.
1	FP-039-58	Pipe 1 1/2 x 1 3/4 TBE	1
2	00-287826-00001	Valve - Ball	1
3	FP-039-58	Pipe 1 1/2 x 1 3/4 TBE	1
4	FP-028-28	Pipe Plug 11/2	1
5	FP-019-54	Tee - Pipe 1 1/2 x 1 1/2 x 1 1/2	1
6	FP-088-76	Pipe 1 1/2 x 13 1/2 S.T.O.E	1
7	FP-014-31	Elbow - Pipe 1 1/2 x 90 Deg	1
8	FP-039-58	Pipe 1 1/2 x 1 3/4 TBE	1
9	00-287826-00001	Valve - Ball	1
10	FP-039-58	Pipe 1 1/2 x 1 3/4 TBE	1
11	FP-088-71	Coupling - Pipe	1
12	FP-088-73	Pipe 1 1/2 x 4 1/2 S.T.O.E	1
13	FP-088-09	Bushing - Pipe Reducing 2 to 1 1/2	1
14	FP-080-57	Tee - Pipe 2 x 2 x 1 1/2	1
15	FP-088-78	Pipe 2 x 45/8 S.T.O.E	1
16	FP-088-72	Coupling - Pipe	1
17	FP-088-77	Pipe 2 x 3 1/4 S.T.O.E	1
18	FP-019-63	Pipe Tee 2 x 2 x 2	1

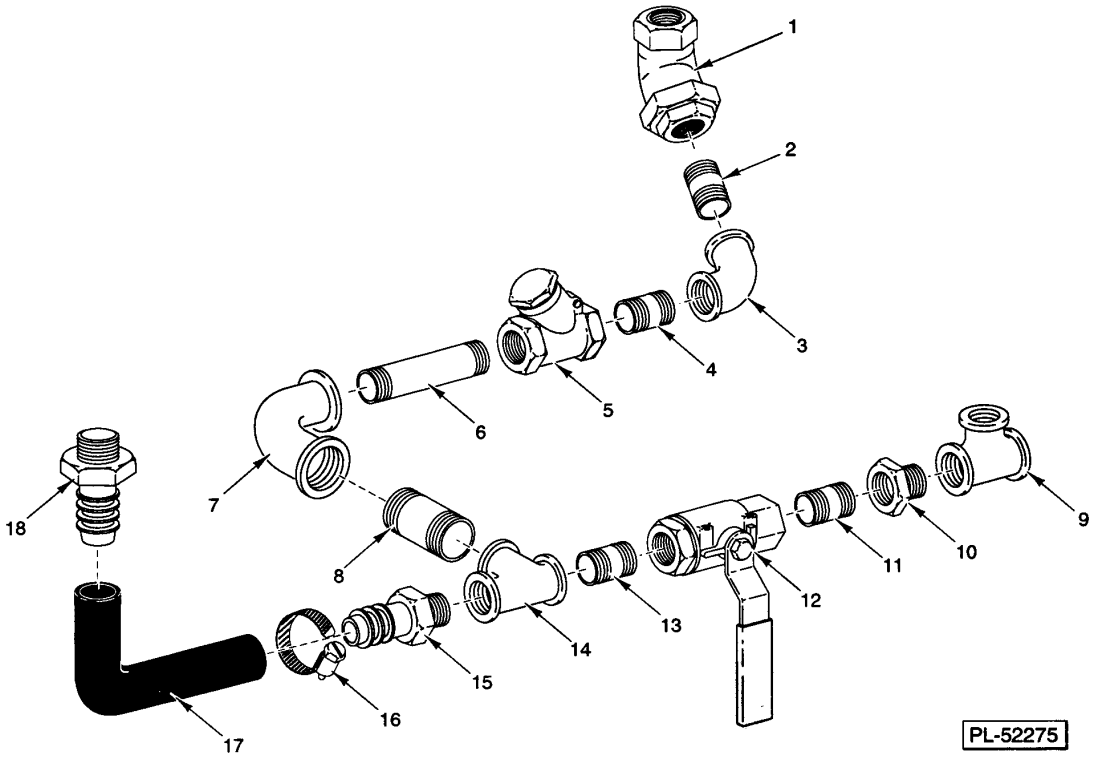

DRAIN PIPING UNIT
(L-R)
(SINGLE VALVE DRAIN SYSTEM)
(PREVIOUS CONSTRUCTION)

DRAIN PIPING UNIT
(L-R)
(SINGLE VALVE DRAIN SYSTEM)
(PREVIOUS CONSTRUCTION)

ILLUS. PL-52275	PART NO.	NAME OF PART	AMT.
1	FP-088-08	Union - Pipe Elbow 1 1/2 x 90 Deg. (Ground Seat)	1
2	FP-039-59	Pipe 1 1/2 x 2 TBE	1
3	FP-014-33	Elbow - Pipe 11/2 x 45 Deg.	1
4	FP-039-58	Pipe 1 1/2 x 1 3/4 TBE	1
5	FP-088-19	Check Valve 1 1/2 (Y-Pattern)	1
6	FP-039-61	NLA - Obsolete--Pipe 1 1/2 x 12 TBE	1
7	FP-014-31	Elbow - Pipe 1 1/2 x 90 Deg.	1
8	FP-045-68	Pipe 1/4 x 4 TBE	1
9	FP-019-63	Pipe Tee 2 x 2 x 2	1
10	FP-088-09	Bushing - Pipe Reducing 2 to 1 1/2	1
11	FP-039-58	Pipe 1 1/2 x 1 3/4 TBE	1
12	00-287826-00001	Valve - Ball	1
13	FP-039-58	Pipe 1 1/2 x 1 3/4 TBE	1
14	FP-019-54	Tee - Pipe 1 1/2 x 1 1/2 x 1 1/2	1
15	FP-087-91	Fitting - Hose 1 1/2 I.D. x 1 1/2 MPT	1
16	00-534651	Clamp - Hose (#32 Worm Drive)	2
17	00-474575-00003	Hose	1
18	FP-087-91	Fitting - Hose 1 1/2 I.D. x 1 1/2 MPT	1

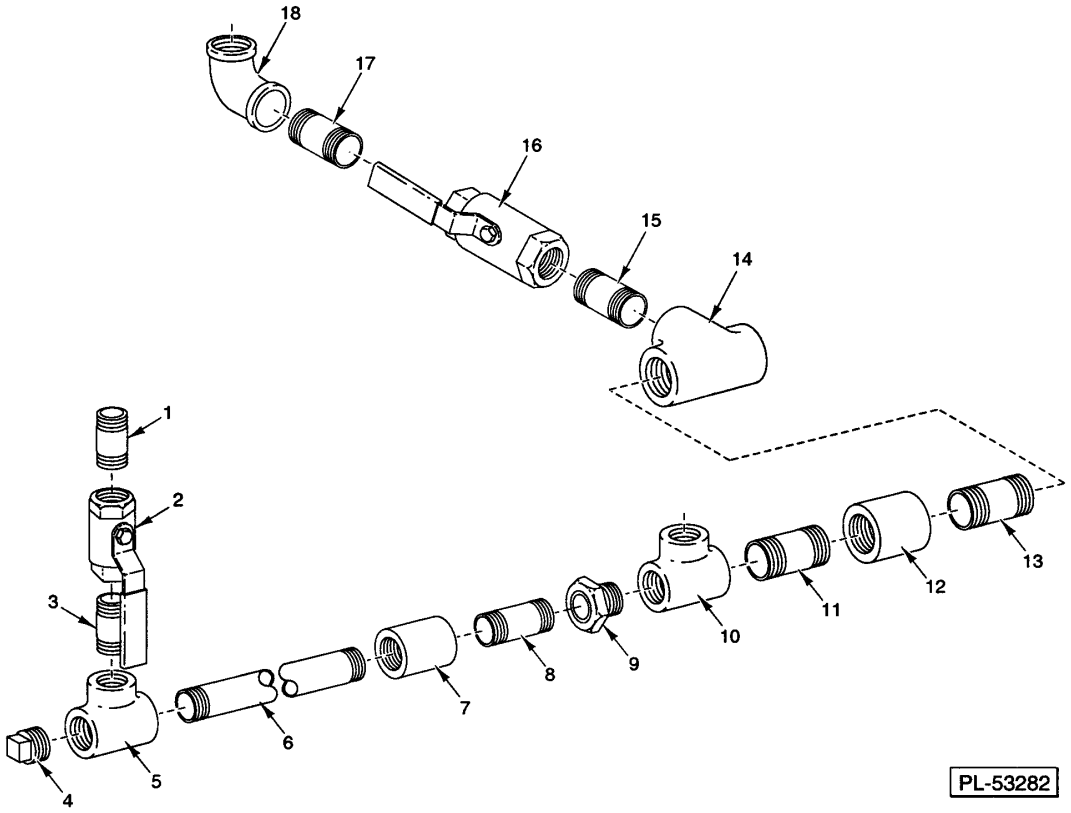

DRAIN PIPING UNIT
(L-R) (DOUBLE VALVE DRAIN SYSTEM)
(CURRENT CONSTRUCTION)

DRAIN PIPING UNIT
(L-R)
(SINGLE VALVE DRAIN SYSTEM)
(CURRENT CONSTRUCTION)

DRAIN PIPING UNIT
(L-R)
(SINGLE VALVE DRAIN SYSTEM)
(CURRENT CONSTRUCTION)

ILLUS. PL-53282	PART NO.	NAME OF PART	AMT.
1	FP-039-58	Pipe 1 1/2 x 1 3/4 TBE	1
2	00-287826-00001	Valve - Ball	1
3	FP-039-58	Pipe 1 1/2 x 1 3/4 TBE	1
4	FP-028-28	Pipe Plug 11/2	1
5	FP-019-54	Tee - Pipe 1 1/2 x 1 1/2 x 1 1/2	1
6	FP-088-75	Pipe 1 1/2 x 13 1/2 S.T.O.E	1
7	FP-088-71	Coupling - Pipe	1
8	FP-088-73	Pipe 1 1/2 x 4 1/2 S.T.O.E	1
9	FP-088-09	Bushing - Pipe Reducing 2 to 1 1/2	1
10	FP-019-63	Pipe Tee 2 x 2 x 2	1
11	FP-088-78	Pipe 2 x 45/8 S.T.O.E	1
12	FP-088-72	Coupling - Pipe	1
13	FP-088-77	Pipe 2 x 3 1/4 S.T.O.E	1
14	FP-080-57	Tee - Pipe 2 x 2 x 1 1/2	1
15	FP-039-58	Pipe 1 1/2 x 1 3/4 TBE	1
16	00-287826-00001	Valve - Ball	1
17	FP-039-58	Pipe 1 1/2 x 1 3/4 TBE	1
18	FP-014-31	Elbow - Pipe 1 1/2 x 90 Deg	1

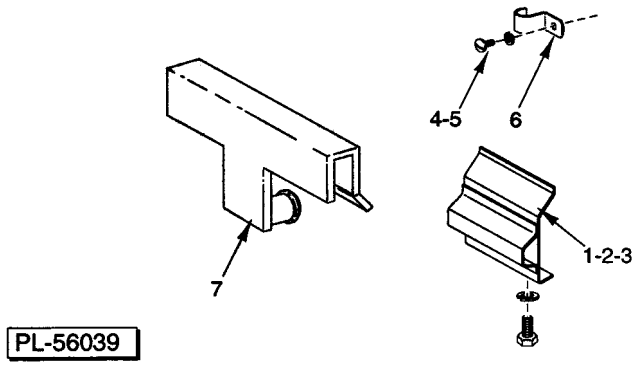

TRAY FLUSH NOZZLE ACCESSORIES

TRAY FLUSH NOZZLE ACCESSORIES

TRAY FLUSH NOZZLE ACCESSORIES

ILLUS. PL-56039	PART NO.	NAME OF PART	AMT.
1	00-473729	Fan - Clamp	1
2	SC-041-02	Cap Screw 1/4-20 x 1 Hex Hd. (SST)	2
3	WL-006-17	Lockwasher 1/4 Helical (SST)	2
4	SC-041-11	Cap Screw 5/16-18 x 3/4 Hex Hd. (SST)	2
5	WL-006-23	Lockwasher 5/16 Helical (SST)	2
6	00-473732	Clamp - Jiffy	2
7	00-749235	Tray - Fan	1

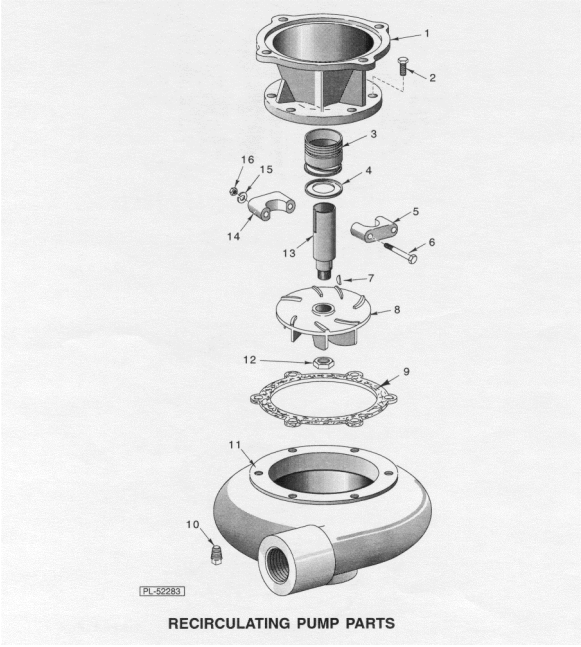

RECIRCULATING PUMP PARTS

RECIRCULATING PUMP PARTS

RECIRCULATING PUMP PARTS

ILLUS. PL-52283	PART NO.	NAME OF PART	AMT.
1	00-475010-00001	Adapter	1
2	00-475010-00006	Cap Screw 5/16-18 x 3/4 Hex Hd	6
3	00-475010-00004	Seal Assy. (Incls. Item 5)	1
4	00-475010-00003	Retainer - Seal	1
5	00-223605-00006	Clamp	1
6	SC-041-18	Cap Screw 5/16-18 x 1-3/4 Hex Hd. (SST)	2
7	00-223605-00002	Key - Impeller	1
8	00-475010-00007	Impeller	1
9	00-223605-00001	Gasket	1
10	FP-028-03	Pipe Plug 1/8 Sq. Hd	2
11	00-475010-00002	Housing - Pump	1
12	00-475010-00005	Lock Nut - Impeller	1
13	00-223605-00011	Sleeve - Drive	1
14	00-223605-00006	Clamp	1
15	WL-006-23	Lockwasher 5/16 Helical (SST)	2
16	NS-015-11	Nut 5/16-18 Hex (SST)	2

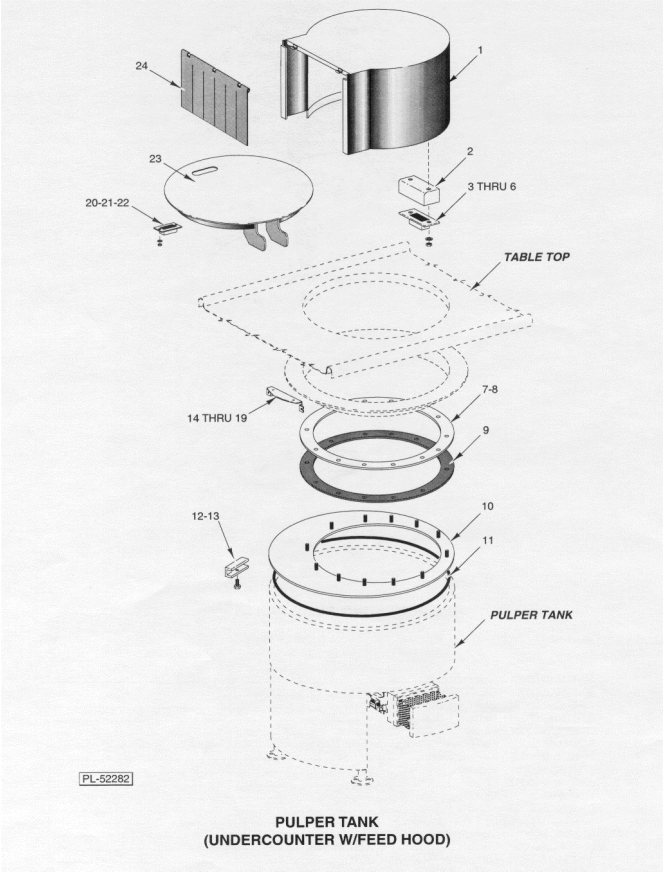

PULPER TANK
(UNDERCOUNTER W/FEED HOOD)

PULPER TANK (UNDERCOUNTER W/FEED HOOD)

PULPER TANK
(UNDERCOUNTER W/FEED HOOD)

ILLUS. PL-52282	PART NO.	NAME OF PART	AMT.
1	00-474708	Hood - Feed	1
2	00-474710	Guard - Magnet	1
3	00-474551	Magnet & Housing Assy	1
4	SC-119-30	Mach. Screw 6-32 x 3/4 Hex Hd (SST)	2
5	WS-023-21	Washer (SST)	2
6	NS-031-50	Stop Nut 6-32 Hex (SST)	2
7	00-474140	Retainer - Sanitary Ring	1
8	NS-047-86	Stop Nut - Special 1/4-20 Hex	12
9	00-474139	Gasket - Sanitary Ring	1
10	00-474137	Top - Tank	1
11	00-545193	Gasket	AR
12	00-473863	Clamp	8
13	SC-041-13	Cap Screw 5/16-18 x 1 Hex Hd. (SST)	8
14	00-474538	Guard - Reed Switch	1
15	SC-119-31	Mach. Screw 10-24 x 3/8 Hex Hd. (SST)	2
16	WL-006-07	Lockwasher #10 Helical (SST)	2
17	00-563064	Interlock, Bracket Switch Assembly	1
18	WS-023-21	Washer (SST)	2
19	NS-031-50	Stop Nut 6-32 Hex (SST)	2
20	00-474551	Magnet & Housing Assy	1
21	WS-023-21	Washer (SST)	2
22	NS-031-50	Stop Nut 6-32 Hex (SST)	2
23	00-474135	Coverplate	1
24	00-222243-00004	Curtain 133/4 Lg	1

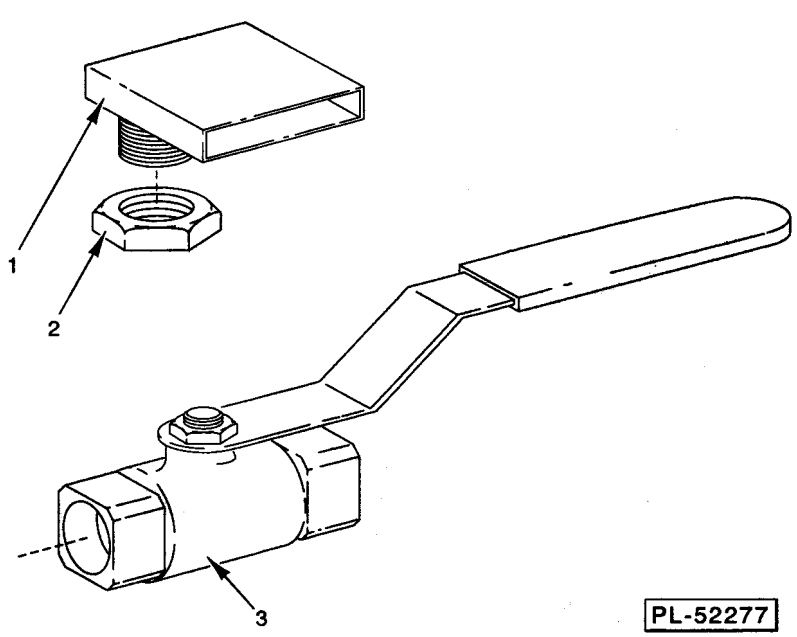

ACCESSORIES

ACCESSORIES

ACCESSORIES

ILLUS. PL-52277	PART NO.	NAME OF PART	AMT.
1	00-289343	Nozzle - Hose	1
2	FP-030-07	Nut - Lock Pipe 11/2 MPSL	1
3	00-287997-00001	Valve - 11/2 Ball (Solder Joints)	1