HOBART

CATALOG OF REPLACEMENT PARTS



X33AE SLICER

A product of HOBART 701 S. RIDGE AVENUE TROY, OHIO 45374-0001

FORM 43160 (November 2008)

Table Of Contents

3 RING GUARD AND CENTER PLATE
5 ARM ASSEMBLY
7 GAUGE PLATE ASSEMBLY
9 AUTODRIVE ASSEMBLY
10 PRODUCT TABLE
11 KNIFE AND MOTOR ASSEMBLY
13 KNIFE SHARPENER UNIT
15 BOTTOM COVER AND KICKSTAND

 © HOBART 2008

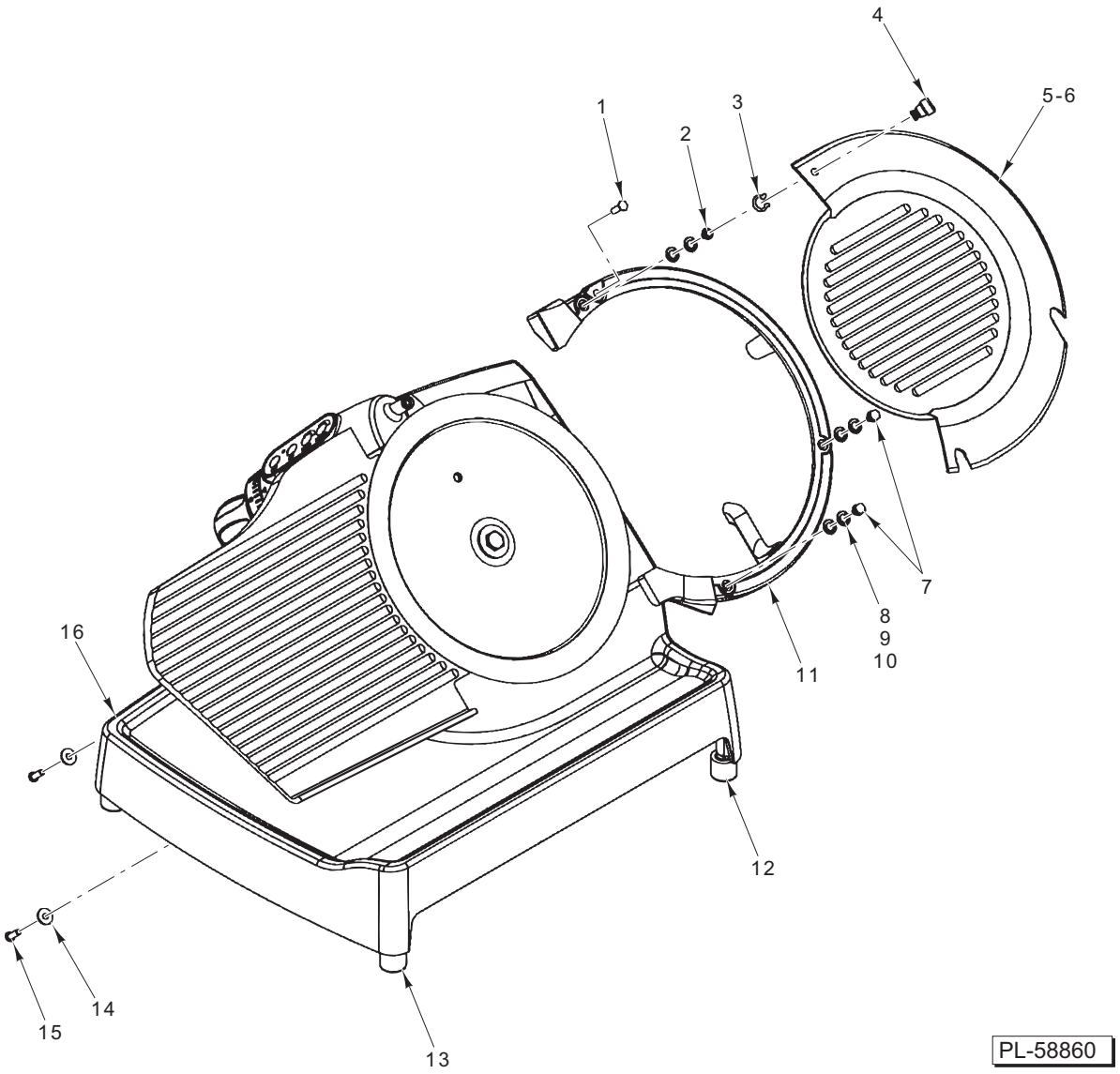

RING GUARD AND CENTER PLATE

ILLUS. PL-58860	PART NO.	NAME OF PART	AMT.
1	01-402175-00529	Screw Flat Hd.	1
2	01-403375-01391	Stud – Post	1
3	01-402275-00608	Ring – Retaining	1
4	01-403375-01392	Knob	1
5	01-404675-01144	Center Plate Assy. (Incls. Items 3, 4, & 6)	1
6	01-403775-00499	Center Plate – Solid	1
7	01-403375-01388	Shoulder Stud	2
8	01-403275-00237	Shim (1.0 mm)	AR
9	01-403275-00238	Shim (0.5 mm)	AR
10	01-403275-00241	Shim (0.3 mm)	AR
11	01-403775-00497	Ring Guard	1
12	01-403875-00249	Foot (Suction)	4
13	01-403875-00239	Foot	4
14	01-402275-00586	Washer	2
15	01-402175-02867	Screw – Button Soc. Hd.	2
16	01-403875-00171	Base	1

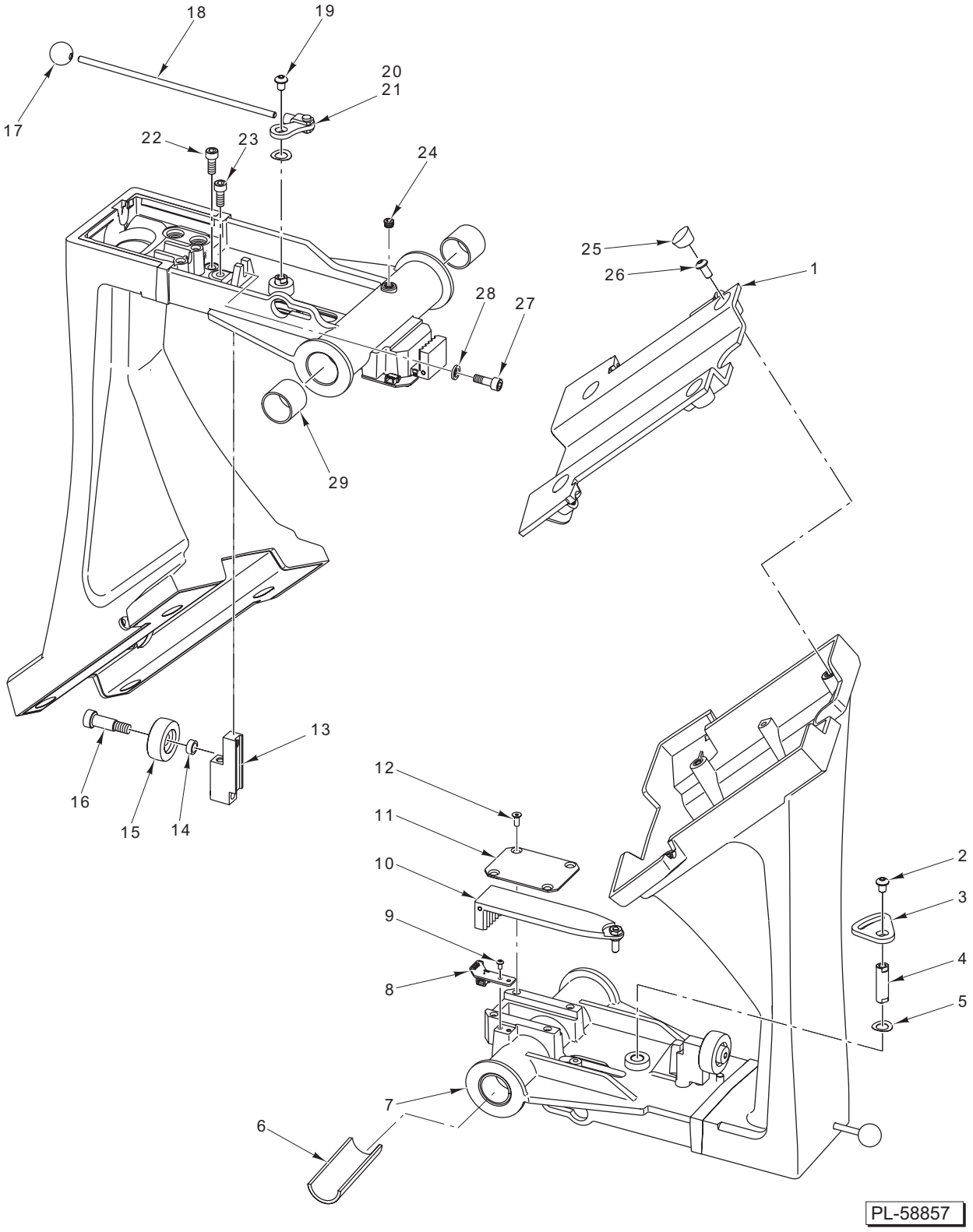

ARM ASSEMBLY

ARM ASSEMBLY

ILLUS. PL-58857	PART NO.	NAME OF PART	AMT.
1	01-403875-00250	Top Plate Assy.	1
2	01-402175-02862	Cap Screw Socket Button Hd.	1
3	01-403475-01021	Cam – Autodrive Clutch	1
4	01-403375-01376	Shaft – Clutch Pivot	1
5	01-402275-00592	Disc – Spring	1
6	01-403275-00242	Wick – Oil	1
7	01-404375-00226	Arm – Transport (Incls. Item 29)	1
8	01-402675-00920	Sensor – Arm	1
9	01-402175-02831	Cap Screw Socket Button Hd.	2
10	01-404575-01033	Clip Assy.	1
11	01-403475-01023	Plate – Autodrive Clutch	1
12	01-402175-02923	Cap Screw Flat Socket Hd.	4
13	01-403375-01280	Mount – Transport Roller	1
14	01-403375-01378	Spacer – Shaft	1
15	01-402375-00167	Roller – Transport	1
16	01-402175-00502	Shoulder Bolt	1
17	01-402275-00606	Knob – Auto Engage	1
18	01-403375-01373	Rod – Clutch Engage	1
19	01-402175-02862	Cap Screw Socket Button Hd.	1
20	01-402375-00184	Clevis – Stock	1
21	01-403475-01022	Crank – Autodrive Clutch	1
22	01-402175-00510	Screw Socket Nylon Hd.	1
23	01-402175-02746	Cap Screw Socket Hd.	1
24	01-402175-00541	Plug – Pipe	1
25	01-403875-00235	Plug – Top Plate	4
26	01-402175-02864	Cap Screw Socket Button Hd.	4
27	01-402175-02745	Cap Screw Socket Hd.	1
28	01-402275-00587	Washer	1
29	01-402275-00521	Bushing	2

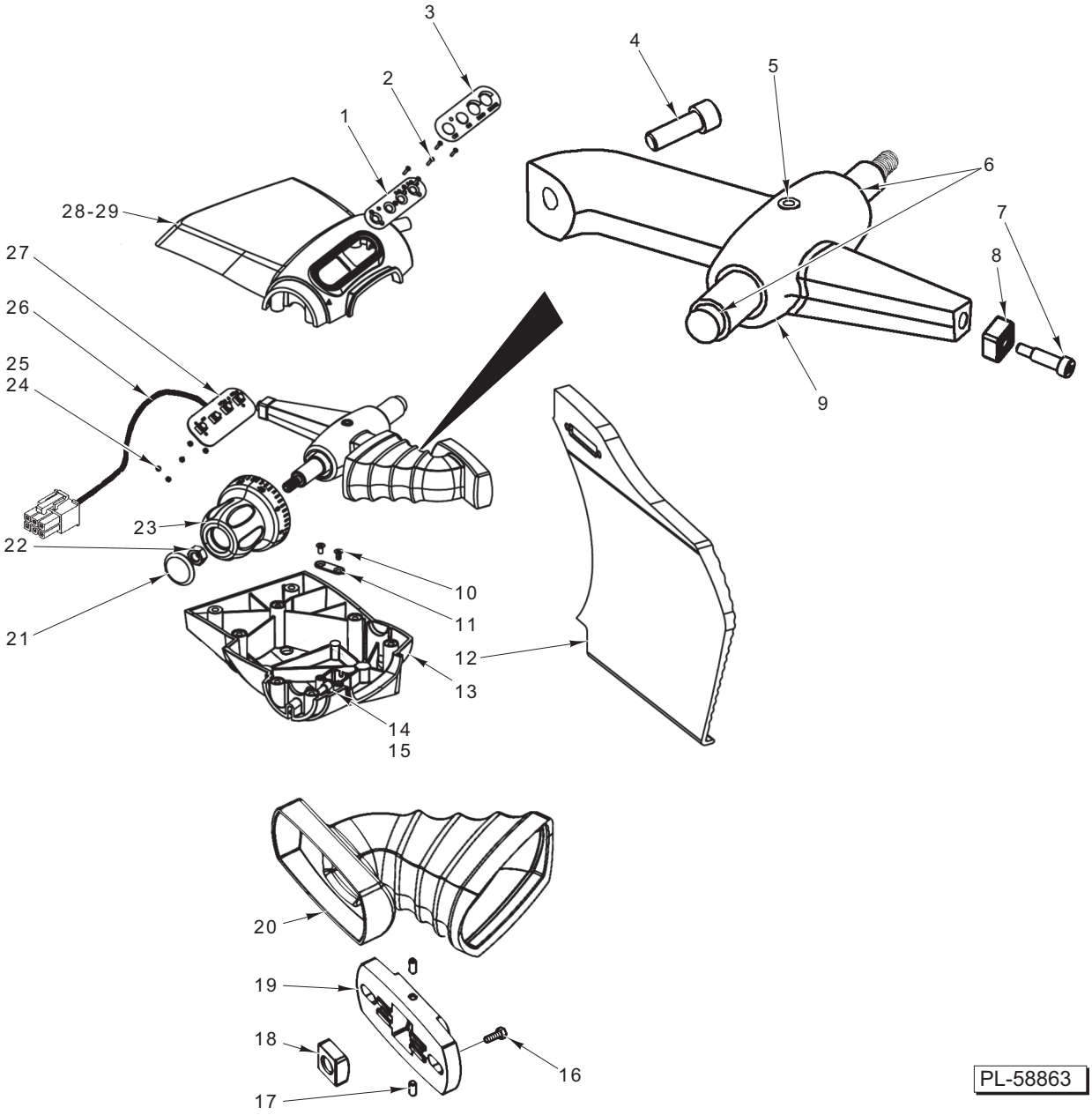

GAUGE PLATE ASSEMBLY

GAUGE PLATE ASSEMBLY

ILLUS. PL-58863	PART NO.	NAME OF PART	AMT.
1	01-403875-00237	Mount – Upper	1
2	01-402175-00528	Screw	5
3	01-403175-00952	Overlay	1
4	01-402175-02779	Screw	1
5	01-402275-00581	Pin – Dowel	1
6	01-403875-00257	Bushing – Flange	2
7	01-402175-00501	Shoulder Bolt	1
8	01-403875-00258	Arm – Slider	1
9	01-404375-00232	Cam Assy. (Incls Items 5, 7, & 8)	1
10	01-402175-00517	Screw	2
11	01-403375-01286	Clamp	1
12	01-403775-00458	Plate – Gauge	1
13	01-403875-00207	Housing – Lower	1
14	01-403375-01393	Stop Pin – Index Knob	1
15	01-402275-00609	Grommet	1
16	01-402175-02756	Screw	2
17	01-402175-00500	Screw	1
18	01-403375-01276	Nut – Cylindrical	1
19	01-403275-00219	Block – Adjustment	1
20	01-403875-00236	Boot	1
21	01-402275-00414	Plug	1
22	01-402175-00504	Nut	1
23	01-403875-00248	Knob – Index	1
24	01-402175-00077	Nut	5
25	01-403275-00013	Lockwasher	5
26	01-404175-00715	Harness – Upper Wire	1
27	01-402675-00918	PCB Assy. (Upper)	1
28	01-403875-00208	Housing – Upper	1
29	01-404375-00240	Housing – Upper Assy. (Incls. Item 28 & Magnet)	1
	01-402175-02744	Screw (Upper To Lower Housing & Housing To Base)	AR
	01-402175-02749	Screw – Long (Housing To Base)	AR
	01-402275-00586	Washer (Housing To Base)	AR
	01-404675-01165	LHA Assy. – No Lock (Black) (Incls. Items 1, 2, 3, 6, 9, 10, 11, 13, 14, 15, & 21 thru 29)	1

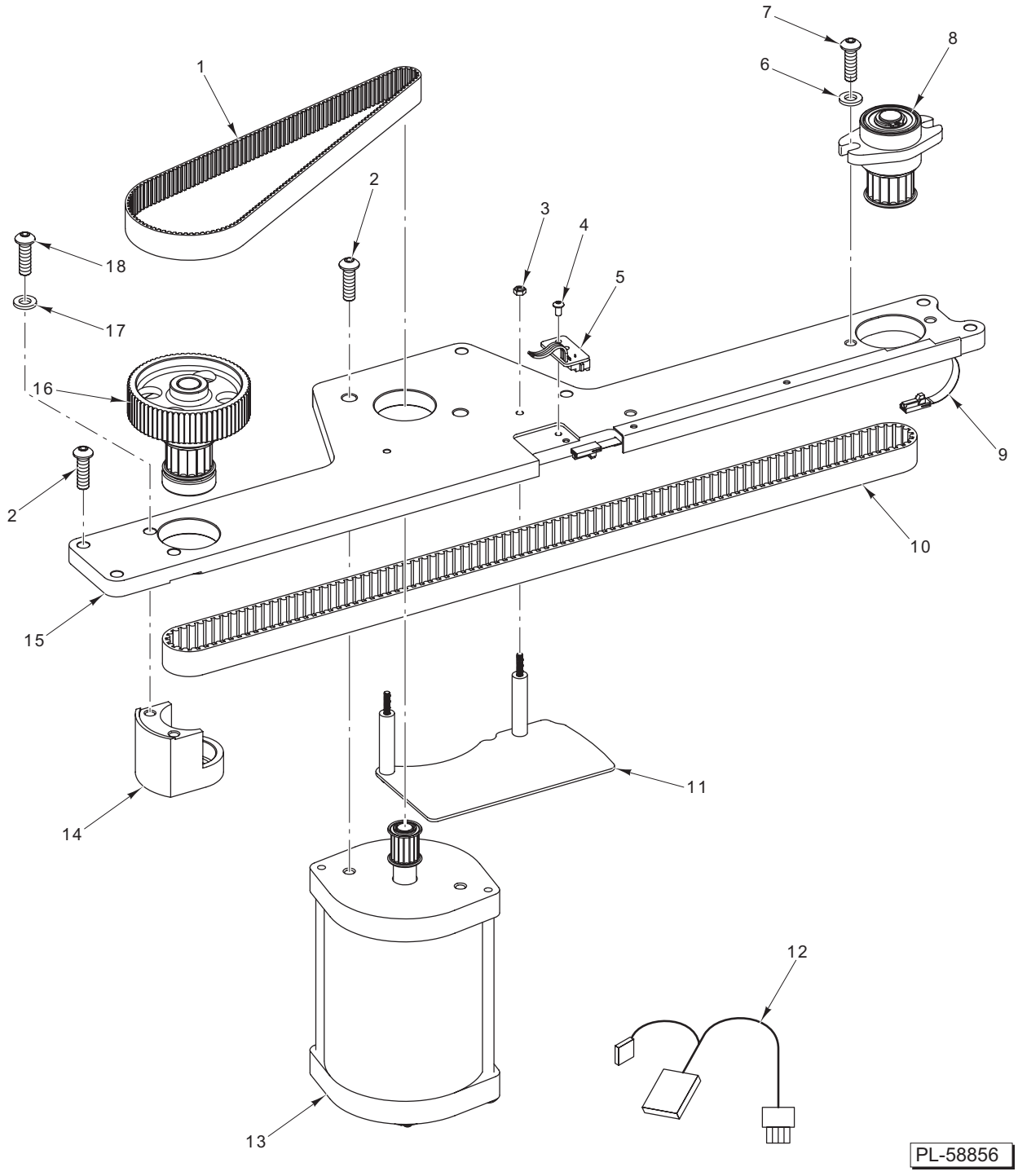

AUTODRIVE ASSEMBLY

AUTODRIVE ASSEMBLY

ILLUS. PL-58856	PART NO.	NAME OF PART	AMT.
1	01-402375-00172	Belt – Secondary	1
2	01-402175-02868	Cap Screw Socket Button Hd.	2
3	01-402175-00522	Lock Nut Hex	2
4	01-402175-02831	Cap Screw Socket Button Hd.	2
5	01-404175-00732	Cable (J4)	1
6	01-402275-00587	Washer	2
7	01-402175-02866	Cap Screw Socket Button Hd.	2
8	01-404375-00224	Tensioner Assy.	1
9	01-404175-00714	Flex Cable Assy.	1
10	01-402375-00171	Belt – Primary	1
11	01-404675-01151	Guide Assy. (Flex Cable)	1
12	01-404175-00716	Cable (J9) (Encode PCB Jumper)	1
13	01-404175-00734	Motor Assy.	1
14	01-403775-00495	Housing – Autodrive Transmission	1
15	01-404975-00481	Autodrive Plate Assy.	1
16	01-404375-00225	Transmission	1
17	01-402275-00603	Washer – Nylon	2
18	01-402175-02868	Cap Screw Socket Button Hd.	2

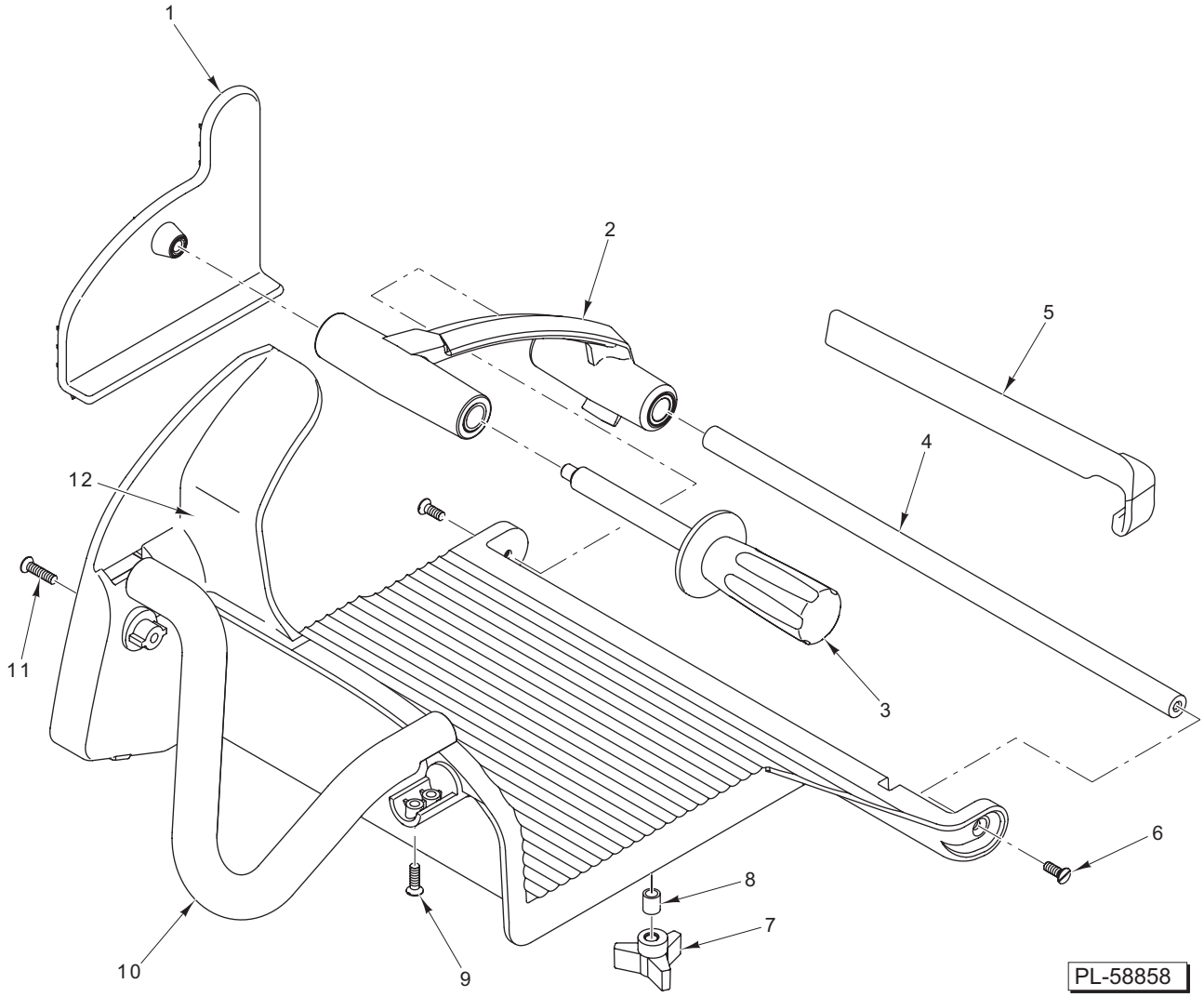

PRODUCT TABLE

ILLUS. PL-58858	PART NO.	NAME OF PART	AMT.
1	01-403875-00177	Pusher Assy.	1
2	01-404275-00236	Arm – Pusher	1
3	01-404575-01035	Handle – Pusher (Black)	1
4	01-403375-01387	Rail – Guide	1
5	01-404675-01135	Fence – Product	1
6	01-402175-00509	Cap Screw Slotted Flat Hd.	2
7	01-402275-00605	Knob	1
8	01-403375-01386	Sleeve	1
9	01-402175-00505	Cap Screw Slotted Flat Hd.	2
10	01-403875-00247	Handle – Table	1
11	01-402175-02949	Cap Screw Flat Socket Hd	1
12	01-404975-00476	Table – Product	1
	01-404675-01164	Table Assy. – Product (Black) (Incls. Items 4 & 6 thru 12)	1

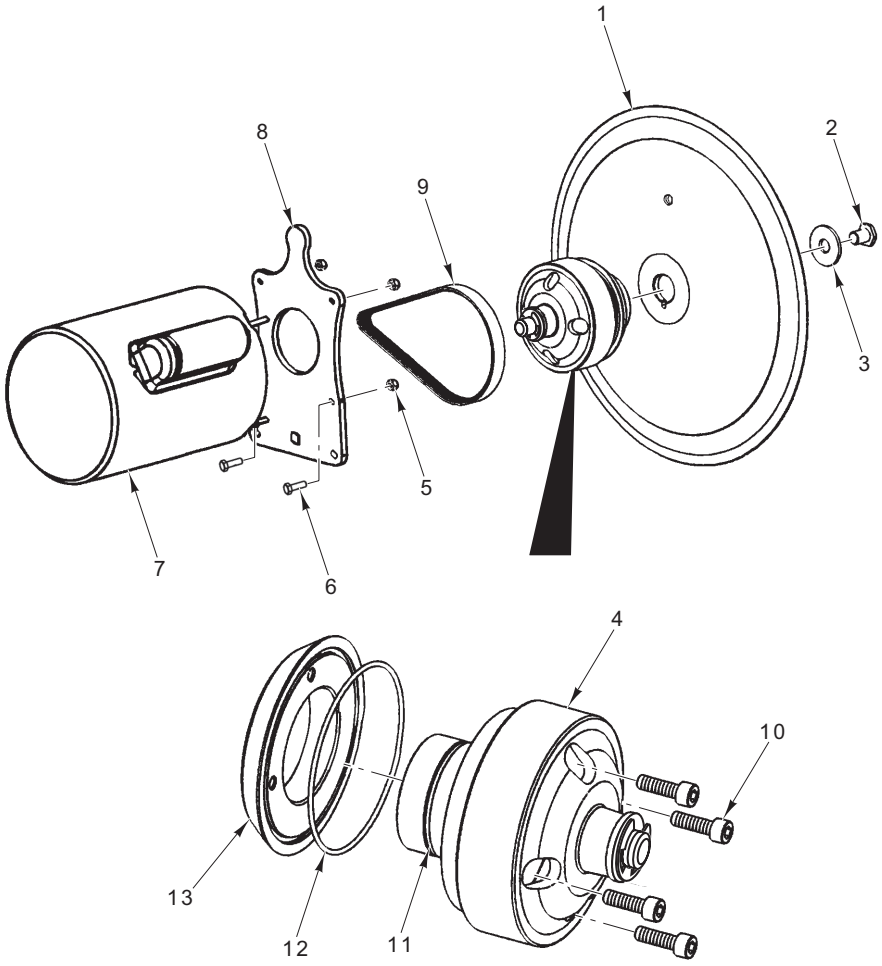

KNIFE AND MOTOR ASSEMBLY

ILLUS. PL-58861	PART NO.	NAME OF PART	AMT.
1	01-403675-00277	Knife	1
2	01-402175-00468	Bolt – Knife	1
3	01-402275-00524	Washer	1
4	01-404675-01140	Hub Assy. (Knife)	1
5	01-402175-00469	Nut – Motor Mount	4
6	01-402175-02744	Screw	4
7	01-404175-00724	Motor (208-240 V., 50/60 Hz., 1 Ph.)	1
8	01-403475-00963	Mount – Knife Motor	1
9	01-402375-00176	Belt – Knife Drive	1
10	01-402175-02746	Cap Screw Socket Hd.	4
11	01-402275-00554	O-Ring (Bearing Housing)	1
12	01-402275-00530	O-Ring (Spindle Mount)	1
13	01-403375-01269	Mount – Spindle	1

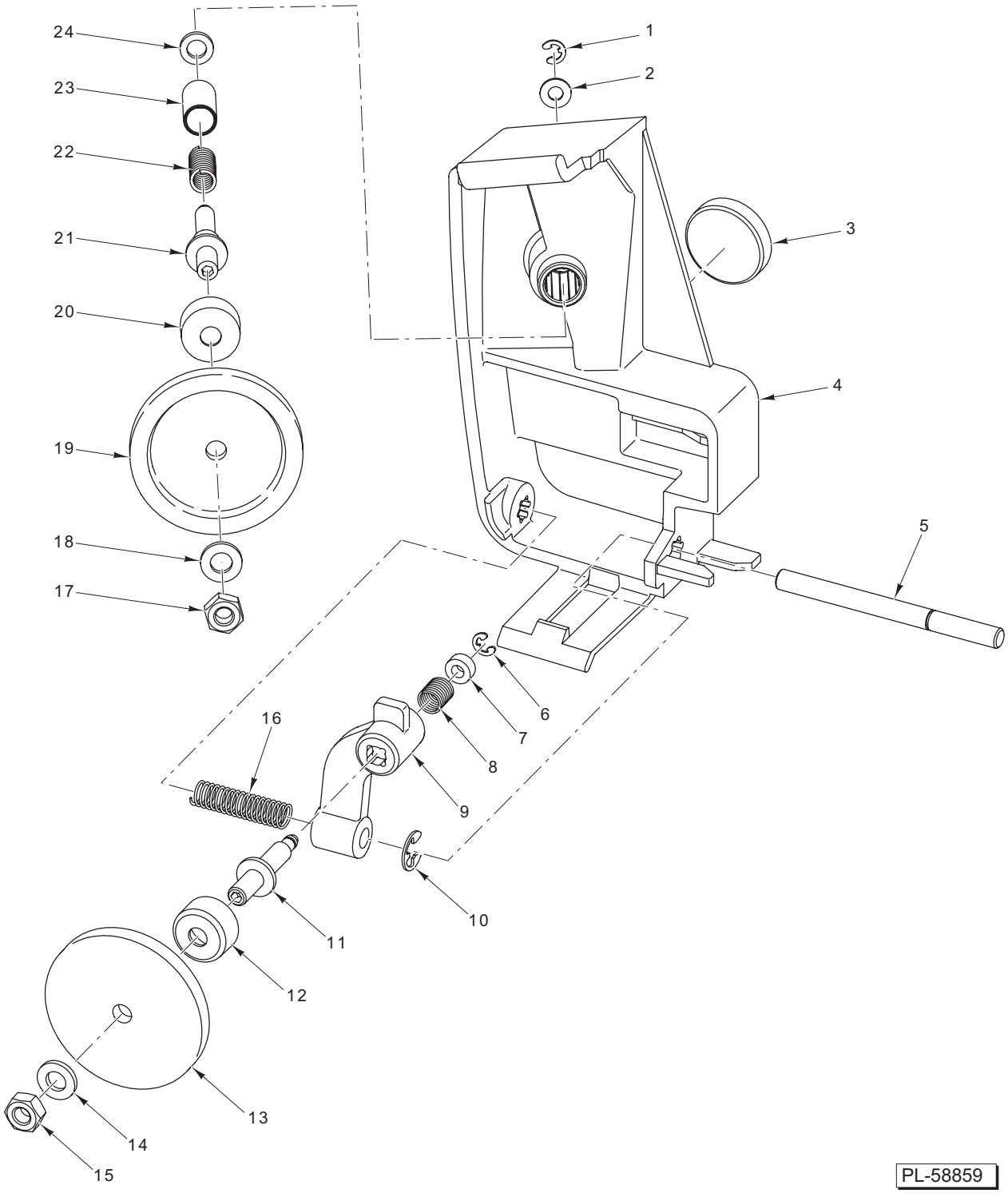

KNIFE SHARPENER UNIT

KNIFE SHARPENER UNIT

ILLUS. PL-58859	PART NO.	NAME OF PART	AMT.
1	01-402275-00594	E-Clip	1
2	01-402275-00441	Washer	1
3	01-402775-00733	Magnet	1
4	01-403875-00231	Frame – Sharpener	1
5	01-403375-01381	Shaft – Sharpener Actuator	1
6	01-402275-00594	E-Clip	1
7	01-402275-00595	Bushing	1
8	01-403275-00231	Spring – Debur	1
9	01-403875-00230	Frame – Debur	1
10	01-402275-00583	E-Clip	1
11	01-404975-00485	Kit – Debur Spindle (RH) (Incls. Item 15)	1
12	01-403875-00232	Skirt (Debur)	1
13	01-403675-00283	Stone – Borazon (Debur)	1
14	01-402275-00587	Washer	1
*15	01-402175-00540	Nut M6 x 1 Hex (RH)	1
16	01-403275-00232	Spring – Sharpener Actuator	1
*17	01-402175-00540	Nut M6 x 1 Hex (RH)	1
18	01-402275-00587	Washer	1
19	01-403675-00283	Stone – Borazon (Sharpener)	1
20	01-403875-00232	Skirt (Sharpener)	1
21	01-404975-00484	Kit – Sharpening Spindle (RH) (Incls. Item 17)	1
22	01-403275-00230	Spring – Sharpener	1
23	01-402275-00596	Bushing	1
24	01-403475-01040	Washer – Fiber	1
	01-404675-01158	Knife Sharpener Assy. (Incls. Items 1 thru 24)	1

*When replacing left hand threaded nuts with right hand threaded nuts, replacement of shafts (items 11 or 21) with right hand threads will be required.

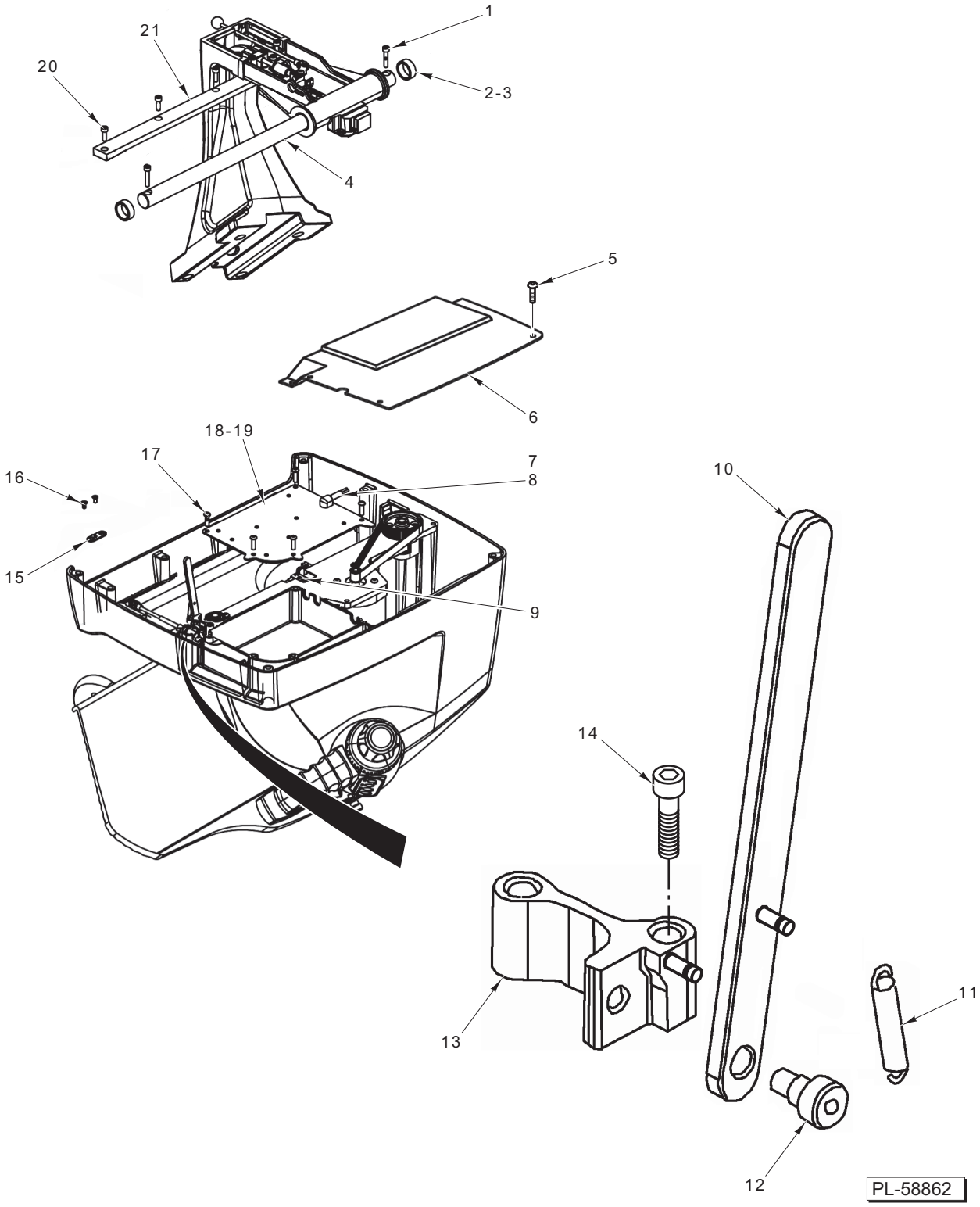

BOTTOM COVER AND KICKSTAND

BOTTOM COVER AND KICKSTAND

ILLUS. PL-58862	PART NO.	NAME OF PART	AMT.
1	01-402175-02861	Cap Screw Button Socket Hd.	2
2	01-403275-00243	Bumper – Rubber	1
3	01-402275-00629	Washer – Bumper	AR
4	01-403375-01306	Rail – Round	1
5	01-402175-02862	Cap Screw Button Socket Hd.	AR
6	01-403875-00238	Cover – Bottom (Incls. Item 5)	1
7	01-404175-00719	Cord – Power	1
8	01-402675-00562	Bushing – Strain Relief	1
9	01-403875-00234	Grommet	2
10	01-404375-00235	Leg – Kickstand	1
11	01-403275-00234	Spring – Extension	1
12	01-402175-00525	Shoulder Bolt	1
13	01-404375-00234	Bracket Assy. – Kickstand	1
14	01-402175-00527	Screw	2
15	01-403375-01286	Clamp – Interlock	3
16	01-402175-02934	Cap Screw Flat Socket Hd	AR
17	01-402175-02854	Cap Screw Button Socket Hd.	5
18	01-402675-00934	PCB Assy. (Main Board) (230 V.)	1
19	01-402675-00752	Breaker – Circuit (12 Amp., 120 V.)	1
20	01-402175-02743	Cap Screw Button Socket Hd.	4
21	01-403375-01278	Rail – Square	1
	01-404675-01139	Kick Stand Assy. (Incls. Items 10 Thru 13)	1