HUSSMANN®

microSC™

DOE 2017
Energy Efficiency
Compliant

SHM-A

Medium Temperature Self Contained Horizontal Merchandiser

with R-290 Refrigerant

WARNINGS:

If the information in these instructions are not followed exactly, a fire or explosion may result, causing property damage, personal injury or death.

Installation and service must be performed by a qualified installer or service agency.

READ THE ENTIRE MANUAL BEFORE INSTALLING OR USING THIS EQUIPMENT.

The unit uses R-290 gas as the refrigerant. R-290 is flammable and heavier than air. It collects first in low areas but can be circulated by the fans. If propane gas is present or even suspected, do not allow untrained personnel to attempt to find the cause. The propane gas used in the unit has no odor. The lack of smell does not indicate a lack of escaped gas. If a leak is detected, immediately evacuate all persons from the store, and contact the local fire department to advise them that a propane leak has occurred. Do not let any persons back into the store until the qualified service technician has arrived and that technician advises that it is safe to return to the store. No open flames, cigarettes or other possible sources of ignition should be used inside or in the vicinity of the units.

FAILURE TO ABIDE BY THIS WARNING COULD RESULT IN AN EXPLOSION, DEATH, INJURY AND PROPERTY DAMAGE.

IMPORTANT
Keep in store for future reference!

Installation & Operation Manual

P/N 3104942_D
November 2023

Spanish 3104949

BEFORE YOU BEGIN

Read these instructions completely and carefully.

PERSONAL PROTECTION EQUIPMENT (PPE)

Personal Protection Equipment (PPE) is required whenever installing or servicing this equipment. Always wear safety glasses, gloves, protective boots or shoes, long pants, and a long-sleeve shirt as required when installing or servicing this equipment.

1. If the information in these instructions are not followed exactly, a fire or explosion may result, causing property damage, personal injury or death.
2. Installation and service must be performed by a qualified installer or service agency.
3. This unit is designed only for use with R-290 gas as the designated refrigerant.

THE REFRIGERANT LOOP IS SEALED. ONLY A QUALIFIED TECHNICIAN SHOULD ATTEMPT TO SERVICE!

- Propane is flammable and heavier than air.
- It collects first in the low areas but can be circulated by the fans.
- If R-290 is present or even suspected, do not allow untrained personnel to attempt to find the cause.
- The propane gas used in the unit has no odor.
- The lack of smell does not indicate a lack of escaped gas.
- If a leak is detected, immediately evacuate all persons from the store, and contact the local fire department to advise them that a pro pane leak has occurred.
- Do not let any persons back into the store until the qualified service technician has arrived and that technician advises that it is safe to return to the store.
- A hand-held propane leak detector (“sniffer”) shall be used before any repair and/or maintenance.
- No open flames, cigarettes or other possible sources of ignition should be used inside the building where the units are located until the qualified service technician and/or local fire department determines that all propane has been cleared from the area and from the refrigeration systems.
- Component parts are designed for propane and non-incendive and non-sparking. Component parts shall only be replaced with identical repair parts.

FAILURE TO ABIDE BY THIS WARNING COULD RESULT IN AN EXPLOSION, DEATH, INJURY AND PROPERTY DAMAGE.

TABLE OF CONTENTS

ANSI Z535.5 DEFINITIONS iv

INSTALLATION

UL Listing 1-1
Federal / State Regulation 1-1
Hussmann Product Control 1-1
Shipping Damage 1-1
Location 1-1
Self Contained Location 1-2
Model Description 1-3
Unloading 1-3
Exterior Loading 1-3
Shipping Skid 1-3
Merchandiser Leveling 1-4
Optional Legs 1-4
Serial Plate Location 1-4
Refrigeration Unit Access 1-4
Sealing Merchandiser to Floor 1-4
Self-Contained Refrigeration Equipment
Start Up Check List 1-5

ELECTRICAL / REFRIGERATION

Merchandiser Electrical Data 2-1
Field Wiring 2-1
Electrical Connections 2-1
Electrical Outlet 2-1
Refrigeration 2-1
Refrigeration System 2-2
Before Beginning a Service or Repair 2-3
Replacing Refrigeration System Components . . 2-4
Steps to Recover Refrigerant 2-4
Charging 2-4
Water Outlet and Water Seal 2-5

START UP / OPERATION

Controller Operation 3-1
Technical Data 3-2
Further Information 3-2
Connections 3-3
LED 3-4
KDE PLUS Buttons 3-5
Sensor to Control Configuration. 3-6
Controls and Adjustments 3-7
Start Up 3-8
Load Limits 3-8
Stocking 3-8
Thermometer 3-8

MAINTENANCE

Care and Cleaning 4-1
Cleaning Discharge Honeycomb 4-1
Cleaning Stainless Steel Surfaces 4-2
Cleaning Under Step Pan 4-2
Cleaning Thermometer 4-2
Cleaning Coils 4-2
Cleaning Evaporation Pan 4-3
Removing Scratches from Bumper 4-3
Self-Contained Refrigeration Equipment
Maintenance Check List 4-4

SERVICE

Replacing Fan Motors and Blades 5-1
Replacing Evaporation Fan Motors and
Blades 5-2
Replacing Food Compartment Fan Motors
and Blades. 5-4

WARRANTY

IMPORTANT
KEEP IN STORE FOR FUTURE REFERENCE
Quality that sets industry standards!

12999 St. Charles Rock Road • Bridgeton, MO 63044-2483
U.S. & Canada 1-800-922-1919 • Mexico 1-800-890-2900
www.hussmann.com
© 2023 Hussmann Corporation

REVISION HISTORY

REVISION D
Updated fan motor and blades replacement

REVISION C
New System Drawings

REVISION B
Updated Warnings

ORIGINAL ISSUE — FEBRUARY 2020

ATTENTION

Merchandiser must operate for 24 hours before loading product!

Regularly check merchandiser temperatures.

Do not break the cold chain. Keep products in cooler before loading into merchandiser.

These merchandisers are designed for only pre-chilled products.

WARNING

Do not use mechanical devices or other means to accelerate the defrosting process.

Do not use electrical appliances inside the food storage compartments of the case.

* *

ANSI Z535.5 DEFINITIONS

• **DANGER –** Indicate[s] a hazardous situation which, if not avoided, will result in death or serious injury.

• **WARNING –** Indicate[s] a hazardous situation which, if not avoided, could result in death or serious injury.

• **CAUTION –** Indicate[s] a hazardous situation which, if not avoided, could result in minor or moderate injury.

• **NOTICE –** *Not related to personal injury –* Indicates[s] situations, which if not avoided, could result in damage to equipment.

WARNING

— LOCK OUT / TAG OUT —
To avoid serious injury or death from electrical shock, always disconnect the electrical power at the main disconnect when servicing or replacing any electrical component. This includes, but is not limited to, such items as doors, lights, fans, heaters, and thermostats.

WARNING

All installation and operating instructions concerning the handling, moving, and use of these merchandisers must be carefully followed to avoid either damaging the refrigerant tubing, or increasing the risk of a leak.

WARNING

Case ventilation openings must be clear of any obstructions. Do not damage the refrigerant circuit.

INSTALLATION

UL LISTING

These merchandisers are manufactured to meet ANSI/ UL 471 standard requirements for safety. Proper installation is required to maintain the listing.

FEDERAL / STATE REGULATION

These merchandisers at the time they are manufactured, meet all federal and state/ provincial regulations. Proper installation is required to ensure these standards are maintained. Near the serial plate, each merchandiser carries a label identifying the environment for which the merchandiser was designed for use.

ANSI/NSF-7 Type I – Display Refrigerator / Freezer
Intended for 75°F (24°C) / 55%RH Ambient Application

ANSI/NSF-7 Type II – Display Refrigerator / Freezer
Intended for 80°F / 55%RH Ambient Application

ANSI/NSF-7 – Display Refrigerator
Intended for Bulk Produce

HUSSMANN PRODUCT CONTROL

The serial number and shipping date of all equipment is recorded in Hussmann's files for warranty and replacement part purposes. All correspondence pertaining to warranty or parts ordering must include the serial number of each piece of equipment involved. This is to ensure the customer is provided with the correct parts.

SHIPPING DAMAGE

All equipment should be thoroughly examined for shipping damage before and during unloading. This equipment has been carefully inspected at our factory. Any claim for loss or damage must be made to the carrier. The carrier will provide any necessary inspection reports and/or claim forms.

Apparent Loss or Damage
If there is an obvious loss or damage, it must be noted on the freight bill or express receipt and signed by the carrier's agent; otherwise, carrier may refuse claim.

Concealed Loss or Damage
When loss or damage is not apparent until after equipment is uncrated, retain all packing materials and submit a written response to the carrier for inspection within 15 days.

Recommended operating ambient temperature is between 65°F (18°C) to 75°F (23.9°C). Maximum relative humidity is 55%.

LOCATION

These merchandisers are designed for displaying products in air conditioned stores where temperature is maintained at or below the ANSI / NSF-7 specified level and relative humidity is maintained at or below 55%. Placing refrigerated merchandisers in direct sunlight, near hot tables or near other heat sources could impair their efficiency. Like other merchandisers, these merchandisers are sensitive to air disturbances. Air currents passing around merchandisers will seriously impair their operation.

DO NOT allow air conditioning, electric fans, open doors or windows, etc. to create air currents around the merchandiser.

SELF CONTAINED LOCATION

Product should always be maintained at proper temperature. This means that from the time the product is received, through storage, preparation and display, the temperature of the product must be controlled to maximize the life of the product.

Self contained models have vented base panels to allow air circulation through the condensing unit.

See illustrations for clearances distances from walls, merchandisers, and any other large objects near the merchandiser's vented base panels. Blocking or restricting air flow will adversely affect performance and may damage the refrigeration system.

These models need clearance a minimum of 1 inch on each side and at the back of the unit.

This warning does not mean that Hussmann products will cause cancer or reproductive harm, or is in violation of any product-safety standards or requirements. As clarified by the California State government, Proposition 65 can be considered more of a 'right to know' law than a pure product safety law. When used as designed, Hussmann believes that our products are not harmful. We provide the Proposition 65 warning to stay in compliance with California State law. It is your responsibility to provide accurate Proposition 65 warning labels to your customers when necessary. For more information on Proposition 65, please visit the California State government website.

SHM3-A & SHM4-A

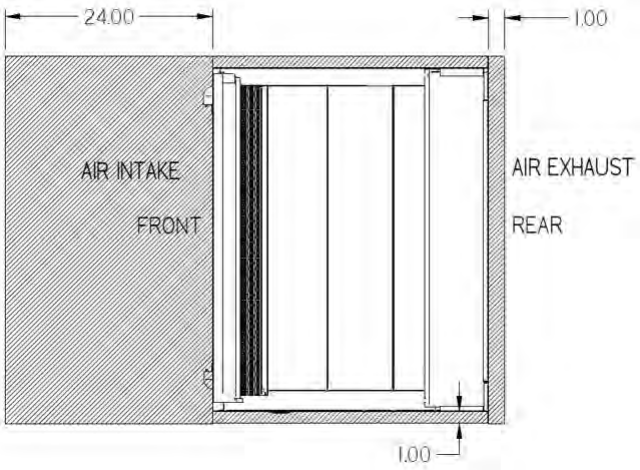

MODEL DESCRIPTION

SHM-A merchandisers offer versatility for the display of food items such as: fresh fruit, vegetables, cheeses and other delicatessen items. Carefully read and follow the instructions prior to operating the merchandiser.

UNLOADING

Unloading from Trailer:
Lever Bar (also known as a Mule, Johnson Bar, J-bar, Lever Dolly, or Pry Lever)

Move the merchandiser as close as possible to its permanent location and remove all packaging. Check for damage before discarding packaging. Remove all separately packed accessories such as kits and shelves.

Improper handling may cause damage to the merchandiser when unloading. To avoid damage:

1. Do not drag the merchandiser out of the trailer. Use a Johnson bar (mule).

2. Use a forklift or dolly to remove the merchandiser from the trailer.

EXTERIOR LOADING

Do NOT walk on top of merchandisers or damage to the merchandisers and serious personal injury could occur. Do not stand inside of merchandiser

SHIPPING SKID

Each merchandiser is shipped on a skid to protect the merchandiser's base, and to make positioning the case easier.

Do not remove the shipping skid until the merchandiser is near its final location. The skid provides protection for both the merchandiser and the floor.

Remove the skid by raising one end of the merchandiser approximately 6 inches. Block the merchandiser securely, and remove the two skid bolts from the raised end. Replace the bolts with (provided) leg levelers. Repeat this procedure at opposing end. Once the leg levelers are secured in place, the merchandiser may be slid off the skid and placed in its final location.

DO NOT TILT MERCHANDISER ON ITS SIDE OR END WHEN REMOVING SKID.

Once the skid is removed, the merchandiser must be lifted —NOT PUSHED— to reposition.

Check floor where merchandisers are to be set to see if it is a level area. Determine the highest part of the floor.

⚠ WARNING

Do NOT remove shipping crate until the merchandiser is positioned for installation.

⚠ WARNING

Do NOT stand or walk on top of merchandiser. Do not store items or flammable materials atop the unit.

MERCHANDISER LEVELING

BE SURE TO POSITION MERCHANDISERS PROPERLY. Level the merchandiser by all four corners. Merchandiser(s) must be installed level to ensure proper operation of the refrigeration system, and to ensure proper drainage of defrost water. Leg levelers come standard with this case.

OPTIONAL LEGS

NSF® approved legs replace the leg levelers if required by local health codes. The legs raise the case 6 inches for cleaning purposes. An optional skirt kit can be provided to snap on the legs.

SERIAL PLATE LOCATION

The serial plate is located on the interior left wall of the merchandiser. It contains all pertinent information such as model, serial number, amperage rating, refrigerant type and charge. This information will be needed to install, service or order parts for the merchandiser.

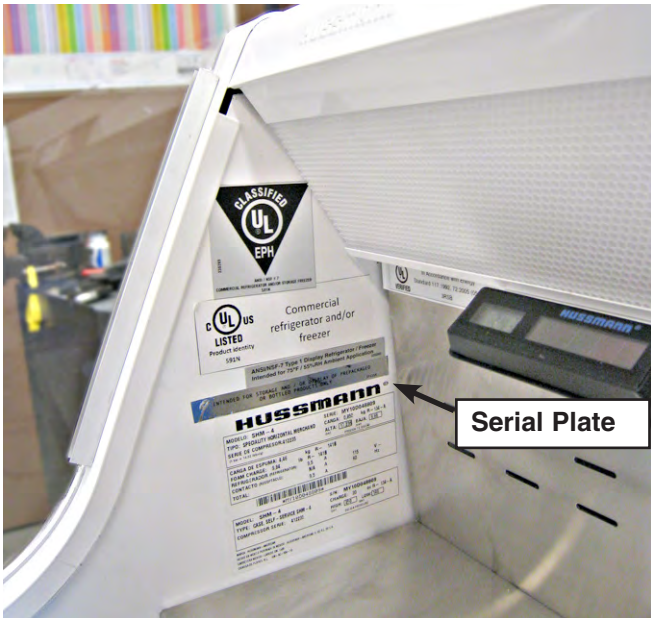

REFRIGERATION UNIT ACCESS

The lower access panel may be removed by lifting the panel straight upward and over the screws on which it is hanging. The panel is installed by reversing the above procedure.

Ensure lower access panel is flat against the floor when installed to prevent air circulation problems on self contained merchandisers.

Lift up and out to remove access panel

Display is mounted on left side of access panel. Be careful not to detach cable from display when removing access panel.

Display

SEALING MERCHANDISER TO FLOOR

If required by local sanitary codes, or if the customer desires, merchandisers may be sealed to the floor using a vinyl cove base trim. The size needed will depend on how much variation there is in the floor, from one end of the merchandiser to the other. Sealing of the lower front and rear panels on self contained models may hamper their removal for servicing or maintenance of the condensing unit.

NOTE: Do not allow trim to cover any intake or discharge grilles located in the lower front panel.

Hussmann Self-Contained Refrigeration Equipment Start Up Check List

Please note that failure to follow this start-up document may void your factory warranty

Step	Startup Activity	Check
1	Locate, read and maintain install/operation manual in a safe place for future reference.	☐
2	Examine unit. Confirm there is NO damage or concealed damage.	☐
3	Level the unit, side to side and front to rear.	☐
4	Remove all shipping brackets/compressor straps/bolts etc.	☐
5	Unit must be run on a dedicated electrical circuit without the use of an extension cord.	☐
6	Ensure that the proper electrical requirements for the equipment are supplied.	☐
7	Verify field electrical connections are tight.	☐
8	Verify all electrical wiring is secured and clear of any sharp edges or hot lines.	☐
9	Verify the condensate drain line is properly trapped and pitched.	☐
10	Verify all required clearances on the sides and back of unit.	☐
11	Verify there are no air disturbances external to the unit. Heat and air registers, fans, and doors etc.	☐
Advise owner/operator that merchandiser must operate at temperature for 24 hrs prior to loading with product.		

Form HSCW01 Rev. 30MAY12 P/N 0525209_B

LEGAL DISCLAIMER:

Hussmann shall not be liable for any repair or replacements made without the written consent of Hussmann, or when the product is installed or operated in a manner contrary to the printed instructions covering installation and service which accompanied such product.

NOTES:

ELECTRICAL / REFRIGERATION

MERCHANDISER ELECTRICAL DATA

Refer to separately shipped case data sheet or the case's serial plate for electrical information.

FIELD WIRING

Field wiring must be sized for component amperes stamped on the serial plate. Actual ampere draw may be less than specified.

ALWAYS CHECK THE SERIAL PLATE FOR COMPONENT AMPERES

ELECTRICAL CONNECTIONS

All wiring must be in compliance with NEC and local codes. All electrical connections ***(for remote models)*** are to be made in the electrical *Handy Box* located behind the removable base panel at the left end of the merchandiser when facing the discharge air louver.

ELECTRICAL OUTLET

Before the merchandiser is connected to any wall circuit, use a voltmeter to check that the outlet is at 100% of the rated voltage. The wall circuit must be dedicated for the merchandiser. Failure to do so voids the warranty. Do not use an extension cord. Never plug in more than one merchandiser per electrical circuit.

- Always use a dedicated circuit with the amperage stated on the unit.
- Plug into an outlet designed for the plug.
- Do not overload the circuit
- Do not use long or thin extension cords. Never use adapters.
- If in doubt, call an electrician.

Self-contained models have factory-installed power cords attached at the electrical box.

NEMA 5-15P Electrical Plug

⚠ WARNING

Risk of Electric Shock. If cord or plug becomes damaged, replace only with a cord and plug of the same type. Merchandiser must be grounded. Do not remove the power supply cord ground.

REFRIGERATION

Each self contained model is equipped with its own condensing unit and control panel located beneath the display area. The merchandiser refrigeration piping is leak tested. The unit is charged with refrigerant from the factory. All models have a hermetic compressor. The systems employ capillary tubes for refrigerant flow control.

REFRIGERATION SYSTEM

(Views below show slide out refrigeration system)

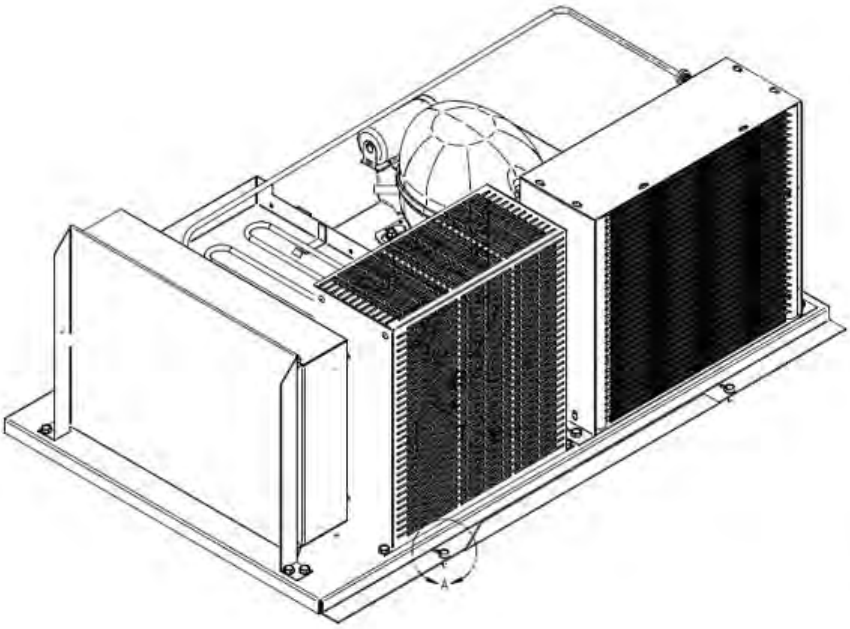

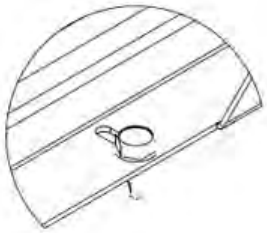

Detail A

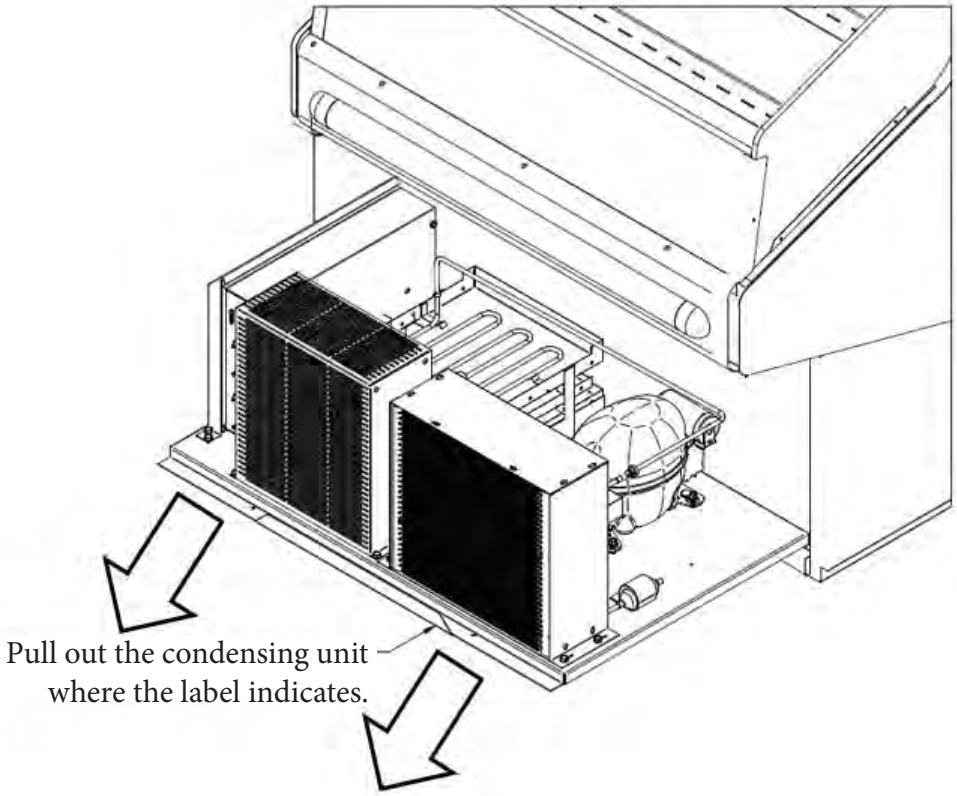

Before Beginning Any Service or Repair:

Use a hand-held propane leak detector ("sniffer") to ensure no propane is present in the immediate area, the inside of the display case and the inside of the refrigeration system. R-290 is an odorless refrigerant. Keep the area clear of all customers and non-essential or unauthorized personnel.

Verify that all repair parts are identical models to the ones they are replacing. Do not substitute parts such as motors, switches, relays, heaters, compressors, power supplies or solenoids. Failure to do so can result in an explosion, death, injury and property damage. Parts used on hydrocarbon cases must meet specific UL certification for non-incendive or non-sparking components. Use only Hussmann approved parts approved through the Hussmann Performance Parts Website. https://parts.hussmann.com/

Brazing must not begin before all propane has been cleared from the immediate area — the inside of the displays case and the inside of the refrigeration system.

⚠ WARNING

Only Hussmann or factory trained technicians should service or repair this R-290 (propane) equipment.

Failure to follow instructions can result in an explosion, death, injury and property damage.

If a leak is detected, follow store safety procedures. It is the store's responsibility to have a written safety procedure in place. The safety procedure must comply with all applicable codes such as local fire department's codes.

At minimum, the following actions are required:

- Immediately evacuate all persons from the store, and contact the local fire department to advise them that a propane leak has occurred.
- Call Hussmann and/or a qualified service agent and inform them that a propane sensor has detected the presence of propane.
- Do not let any persons back into the store until the qualified service technician has arrived and that technician advises that it is safe to return to the store.
- The propane gas used in the unit has no odor. The lack of smell does not indicate a lack of escaped gas.
- A hand-held propane leak detector ("sniffer") should be used before any repair and/or maintenance is attempted. All repair parts must be identical models to the ones they are replacing.
- No open flames, cigarettes or other possible sources of ignition should be used inside the building where the units are located until the qualified service technician and/or local fire department determines that all propane has been cleared from the area and from the refrigeration systems.

REPLACING REFRIGERATION SYSTEM COMPONENTS

⚠ DANGER

Only Hussmann service technicians or technicians qualified to handle R-290 (propane) refrigerant should service or repair this R-290 (propane) equipment Failure to follow instructions can result in an explosion, death, injury and property damage.

STEPS TO RECOVER REFRIGERANT

1. Make sure you are in a well ventilated area before making any service or repair to the refrigeration system.

2. Disconnect all power sources from the system. Some systems may have more than one plug or power supply.

3. Tap system with line tap valves, attaching gauges to the high and low sides of the system.

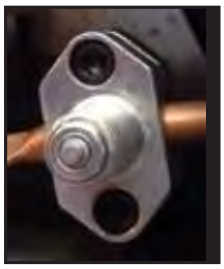

refrigeration line tapping valve

4. Connect hose to an evacuated recovery tank. Open refrigeration gauges and recovery tank.

5. With the suction valve in vacuum, the refrigerant will be recovered into the recovery tank.

6. Once recovered, close the tank valve and remove the guage from the tank and connect nitrogen tank to the system to purge it with nitrogen.

7. Pull vacuum to a minimum of 200 microns or lower.

CHARGING

A calibrated scale with +/-2 gram accuracy must be used to charge the system. The charge amount is shown on the serial plate. Only R-290 grade refrigerant can be used. Standard propane does not meet the purity/moisture content of R-290, and therefore cannot be used to charge cases.

No gas charge adjustments are allowed. When connecting hoses between the refrigeration system, manifold gauges, and refrigerant cylinder, ensure that the connections are secure and there are no potential sources of ignition nearby. Ensure that contamination of different refrigerants does not occur when using charging equipment.

⚠ WARNING

— LOCK OUT / TAG OUT —

To avoid serious injury or death from electrical shock, always disconnect the electrical power at the main disconnect when servicing or replacing any electrical component. This includes, but is not limited to, such items as doors, lights, fans, heaters, and thermostats.

Use dedicated hoses to service R-290 (propane) refrigeration systems. Hoses or lines should be as short as possible to minimize the amount of refrigerant contained in them.

Ensure that the refrigeration system is properly grounded prior to charging the system with refrigerant, to avoid the potential for static build-up.

WARNING

Component parts shall be replaced with like components, and servicing shall be done by factory authorized service personnel only, so as to minimize the risk of possible ignition due to incorrect parts or improper service.

Extreme care must be taken not to overfill the refrigeration system. After charging, carefully disconnect the hoses, attempting to minimize the quantity of refrigerant released. Further leak check the service ports, hoses, refrigerant tanks. The service ports shall be checked for leaks using a hydrocarbon leak detector with a sensitivity of 3 grams/year (0.106 Oz/year) leak rate.

Thoroughly leak check the service ports. If no leak is present, use a pinch-off tool to close the ends of the service tubes before brazing them shut. Remove all service ports. If a Schrader valve is used on the compressor service tube, it must be removed and the previous steps followed in order to braze the service tube shut.

WATER OUTLET AND WATER SEAL

The condensate water outlet is located in the center of the merchandiser. The outlet has a factory installed, external water seal.

For self contained models, this water seal drains into the condensate evaporator pan located beneath the merchandiser. **Ensure the drain hose is properly trapped, and the drain area is not clogged.**

NOTE: All lower base panels must be in place when the refrigerator is operating. If not, air-flow from the condenser will be directed over the evaporator pan and defrost water in the pan may overflow.

WARNING

Refrigeration lines are under pressure. Refrigerant must be recovered before attempting any connection or repair.

NOTES:

START UP / OPERATION

CONTROLLER OPERATION

The electronic controller is located in the cassette compartment. The controller comes factory set, and is ready for use. The front grille must be removed in order to access this control. When removing the grille for this operation or for condenser cleaning, care must be taken not to damage the display interface cable. It may be unplugged during this task.

1. Plug the merchandiser plug into its receptacle.

   a. The controller display will illuminate.
   b. The interior light will illuminate.

2. After the control preprogrammed time delay of up to 6 minutes, the compressor and evaporator fan(s) will start if the control is calling for cooling.

3. The control will cycle the compressor but may also cycle evaporator fan(s) on and off determined by the Set-Point and Differential temperatures.

   a. The Set-Point is the adjustable preprogrammed temperature.
   b. The Differential is the non-adjustable pre programmed temperature.
   c. The Control is designed to read and display a cabinet temperature not a product temperature.

DISPLAY CONTROL

This cabinet temperature may reflect the refrigeration cycle of the Set-Point and it's Differential. The most accurate temperature on a cabinets operation is to verify the product temperature.

Taking as an example a VRL case, freezer, If the Set-Point is -12°F and the Differential is 9°F. (Set-Point) -12°F + 9 (Differential) = -3°F. The compressor and evaporator fan(s) will cycle off -12°F and back on at -3°F.

Main Features:

- Panel-mounted
- Energy saving algorithms and optimised defrost control
- 8 preloaded applications
- Defrost at single / double evaporator
- Frame Heater
- Local network auto-configuration
- Direct load connection (up to 2 HP)
- Supply voltage control LVD
- Presence of an open collector output

- Evaporator fans and condenser fans
- ON /OFF
- LINK2 local area network
- RS485 communication protocol: Modbus
- Compatible with Device Manager (DM)
- Compatible with Unicard and Multi-function key

TECHNICAL DATA

Classification:	electronic automatic control (not safety) device for incorporation
Mounting:	panel mounting
Type of action:	1.B
Pollution class:	2
Material class:	IIIa
Overvoltage category:	II
Nominal pulse voltage:	2500V
Temperature:	Use: –5 … +55°C - Storage: -30 … +85°C
Power supply:	SMPS 100-240Va ±10% 50/60 Hz
Power consumption:	5.5W max
Fire resistance category:	D
Software class:	A
RTC battery life:	In absence of external power, the clock battery will last 3 years.

FURTHER INFORMATION

INPUT CHARACTERISTICS

Measurement range:	**NTC**: -50.0°C ... (on 3-d
Accuracy:	±1.0° for temperatures below -30°C ±0.5° for temperatures between -30°C and +25°C ±1.0° for temperatures above +25°C
Resolution:	1 or 0.1°C
Buzzer:	NO

CONNECTIONS

TERMINALS

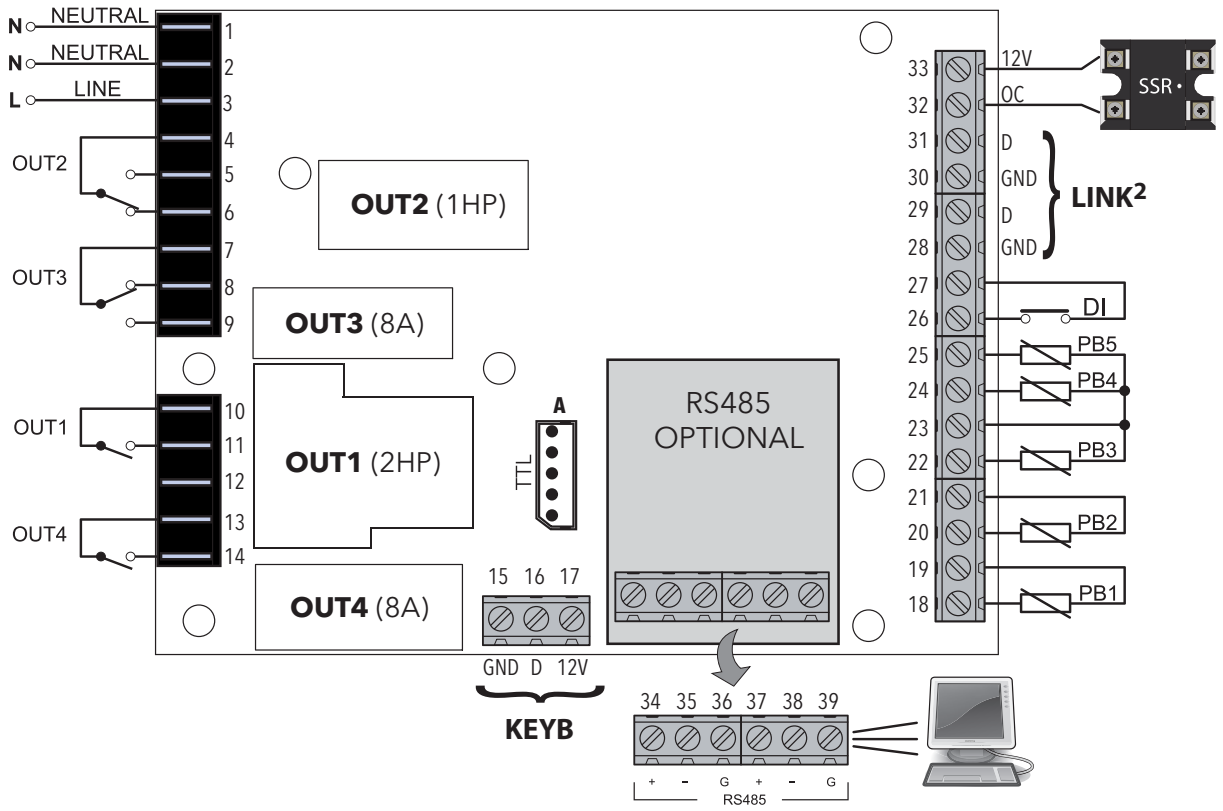

* **N.B.:** analogue inputs PB1...PB5 can also be configured as Digital Inputs DI.

TERMINALS				
1-2	NEUTRAL. These are power supply terminals.		**15-16-17**	Connection to KDEPlus or KDWPlus external keyboard or ECPlus echo module.
3	LINE. These are power supply terminals.		**19-18**	PB1 probe connection.
4	OUT2 Shared Terminal		**21-20**	PB2 probe connection.
5	N.O. OUT2		**23-22**	PB3 probe connection.
6	N.C. OUT2		**23-24**	PB4 probe connection.
7	OUT3 Shared Terminal		**23-25**	PB5 probe connection.
8	N.C. OUT3		**27-26**	Digital input (DI).
9	N.O. OUT3		**28-29**	LINK². Connection 1 - local area network.
10	OUT1 Shared Terminal		**30-31**	LINK². Connection 2 - local area network.
11	N.O. OUT1		**32-33**	Open Collector Output (OC).
12	Not Used		**A**	TTL Unicard/DMI/Multi Function Key connection
13	OUT4 Shared Terminal		**34-35-36**	RS485. Connection 1 - Supervision Gateway.
14	N.O. OUT4		**37-38-39**	RS485. Connection 2 - Supervision Gateway.

LED

RTN400 family controllers will also function even if a keyboard has not been connected.
With **KDEPlus** or **KDWPlus** keyboards (which are the same and guarantee the same functions), the display will be as follows:

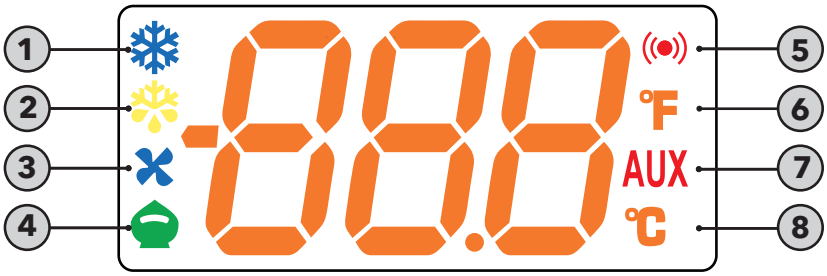

Meaning of LEDs:

No	Icon	LED	Operation	Meaning
1	❄	**Compressor**	Permanently on	compressor on
			Blinking	Delay, protection or start-up blocked
			OFF	otherwise
2		**Defrost**	Permanently on	Defrost active
			Blinking	Activated manually or from Digital Input
			OFF	otherwise
3		**Fans**	Permanently on	Fans active
			OFF	otherwise
4		**Reduced SET / Economy**	Permanently on	Energy Saving active
			Blinking	Reduced setpoint active
			OFF	otherwise
5		**Alarm**	Permanently on	alarm active
			Blinking	Alarm acknowledged
			OFF	otherwise
6	°F	**°F readout**	Permanently on	°F setting (dro =1)
			OFF	otherwise
7	AUX	**AUX**	Permanently on	Aux output active and/or light on
			Blinking	Deep cooling on
			OFF	otherwise
8	°C	**°C readout**	Permanently on	°C setting (dro = 0)
			OFF	otherwise

N.B.: When the instrument is powered on it performs a lamp test, during which time the display and LEDs will flash for several seconds to check that they all function correctly.

KDEPLUS BUTTONS

The **KDEPlus** keyboard has 4 keys, as shown in the illustration:

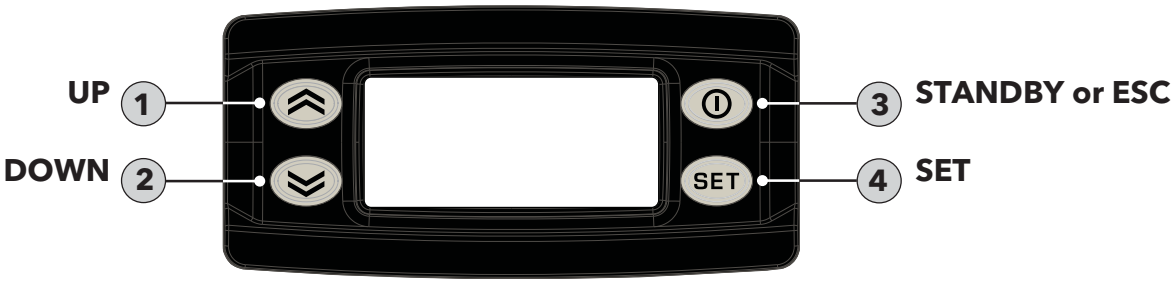

Each key has a different function depending on whether it is:

- Pressed and released
- Pressed for at least 5 seconds
- Pressed and held at start-up
- Pressed in combination with another key.

KEYS

The following table summarizes the function of each key:

No	Key	Action		
		Pressed and released	**Press for at least 5 secs**	**Start-up**
1		• Scrolls through menu items • Decreases values	Activates the **Manual Defrost function** (from outside menus).	---
2		• Scrolls through menu items • Decreases values	Function can be configured by the user (from outside menus). (see parameter H32)	---
3		• Returns to the previous menu level • Confirms parameter value	Activates the Stand-by function (from outside menus).	---
4	set	• Displays any alarms (if active) • Opens Machine Status menu • Confirms commands	Opens the Programming Menu (User and Installer parameters)	When pressed during start-up it enables the user to select the application to be loaded.

Sensor to Control Configuration

Rear of Control

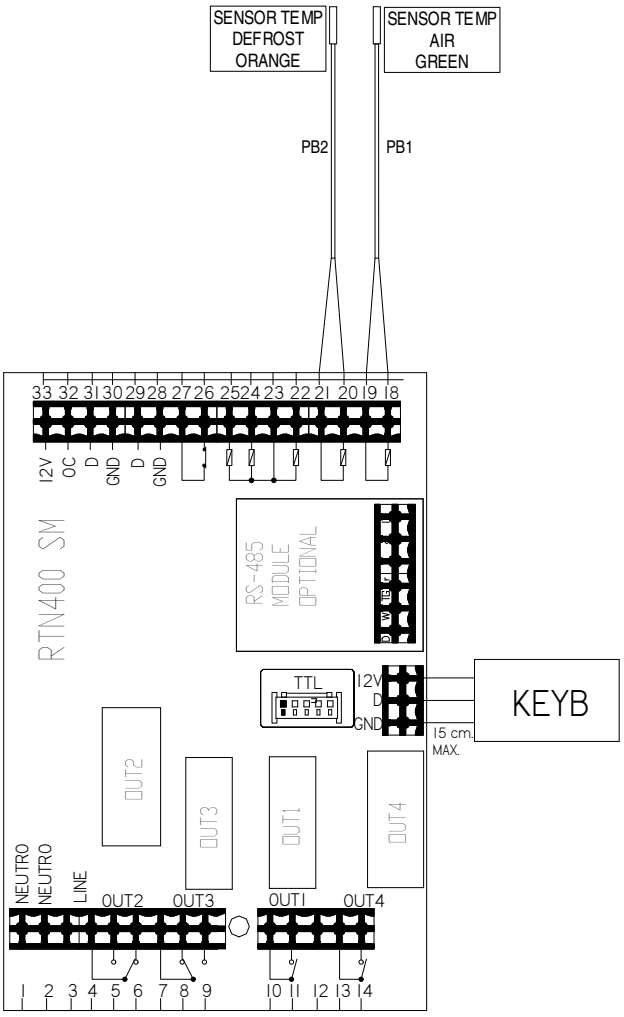

The defrost sensor is located in the evaporator and is routed to the RTN400 controller.

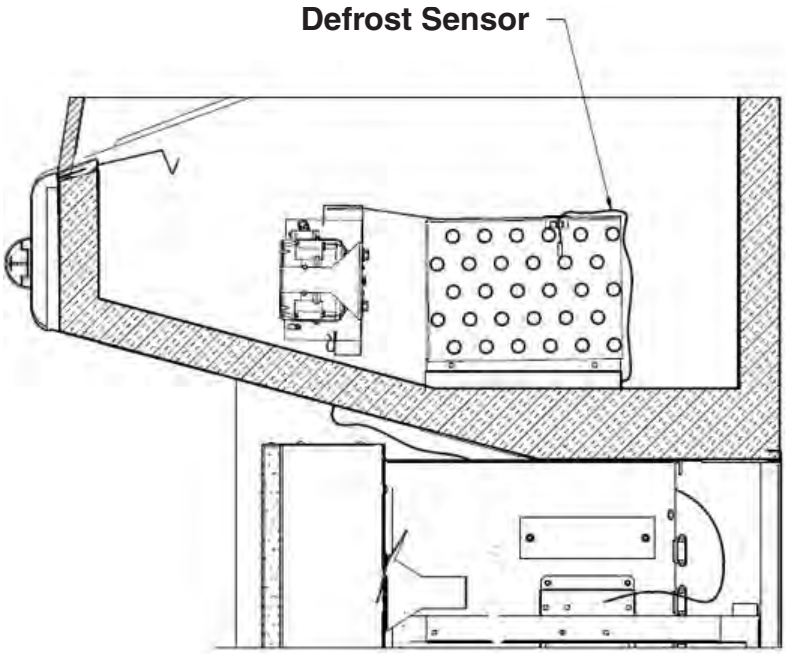

CONTROLS and ADJUSTMENTS

Refrigeration Controls			Defrost Controls			
Model	Product Application	Discharge Air Temperature	Defrost Frequency (per day)	Type of Defrost	Temp. Termination	Failsafe Time (Minutes)
SHM-A Self Contained	Medium Temp.	20° F – 25° F	3	Off Time	48° F	45

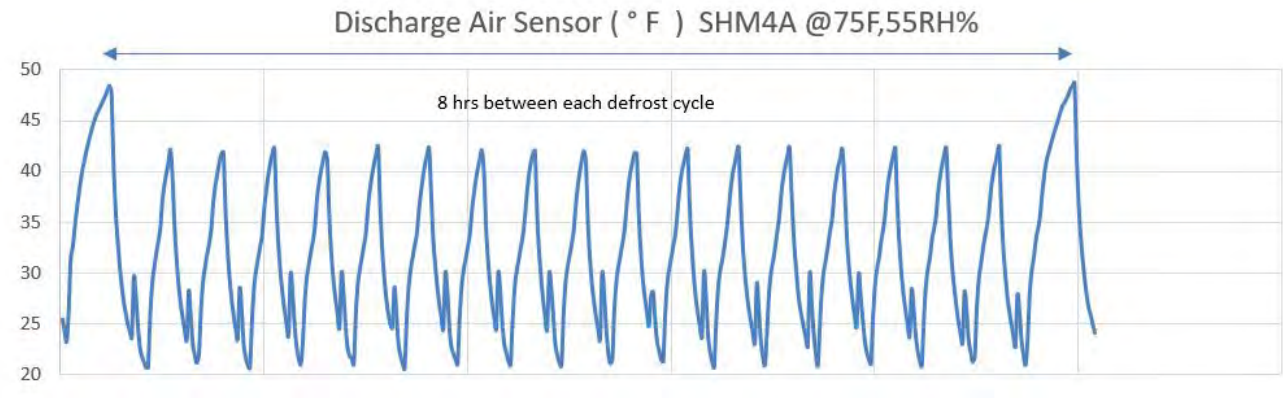

The controller controls refrigeration temperature. This is factory installed in the control panel. Adjust the control to maintain the discharge air temperature shown.

The factory defined setpoint is required to comply with energy regulations such as from the Department of Energy (DOE). If for some reason, colder tempertures are required for customer specific products the setpoint can be adjusted.

Discharge air temperatures should be measured at the center of the discharge honeycomb.

Defrosts are time initiated and temperature terminated. The defrost setting is factory set as shown above.

To ensure a thorough defrost, defrost must be terminated by the temperature termination setting — not by time.

The Chart shown in the figure above describes the operation of a SHM4A model under ambient conditions such as 75°F and RH of 55%.

The parameter shown is discharge air temprerature in the honeycomb having the set point in the controller of 21°F.

If the Set-Point is 21°F and the Differential is 20°F. (Set-Point) 21°F + 20°F (Differential) = 41°F. The compressor will cycle off 21°F and back on at 41°F.

START UP

Follow the start up procedures as detailed in Section 3 of this manual. A thorough inspection should be made prior to start up to ensure there are no loose nuts, bolts, electrical connections or refrigeration lines rubbing or chaffing.

Turn the power switch to the ON position. Allow the system to reach normal operating temperature prior to loading any product. The merchandiser cabinet has a forced air curtain that flows over the top of the product. Air flows out of the honeycomb diffuser, across the product, and into the return air duct.

LOAD LIMITS

Each merchandiser has a load limit decal. Shelf life of perishables will be short if load limit is violated.

LOAD LIMIT

AT NO TIME SHOULD MERCHANDISERS BE STOCKED BEYOND THE LOAD LIMITS INDICATED.

DO NOT BLOCK HONEYCOMB OR RETURN AIR GRILLE.

STOCKING

Product should NOT be placed inside the merchandisers until merchandisers are at proper operating temperature.

Allow merchandiser 24 hours to operate before loading product.

⚠ WARNING

Product will be degraded and may spoil if allowed to sit in a non-refrigerated area.

Proper rotation of product during stocking is necessary to prevent product loss. Always bring the oldest product to the front and set the newest to the back.

AIR DISCHARGE AND RETURN FLUES MUST REMAIN OPEN AND FREE OF OBSTRUCTION AT ALL TIMES to provide proper refrigeration and air curtain performance. Do not allow product, packages, signs, etc. to block these grilles. Do not use non-approved shelving, baskets, display racks, or any accessory that could hamper air curtain performance.

Do not allow product to be placed outside of the designated load limits in the illustration.

THERMOMETER

A solar powered thermometer is provided with each merchandiser. Temperature display in Fahrenheit degrees is standard. Celsius display is available as an option. The thermometer is located in the cabinet interior in the top left hand rear corner.

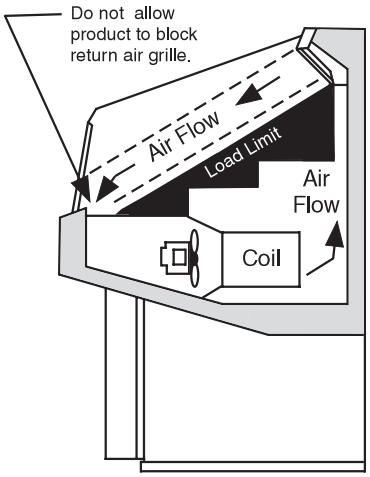

MAINTENANCE

⚠ WARNING

To reduce the risk of fire, electrical shock or injury when cleaning this merchandiser:

- **Unplug the merchandiser before cleaning;**
- **Keep all liquids away from electrical and electronic components;**
- **Do not use any mechanical device or other means to speed the defrost process, except as recommended by the manufacturer.**

CARE AND CLEANING

Long life and satisfactory performance of any equipment is dependent upon the care it receives. To ensure long life, proper sanitation and minimum maintenance costs, these merchandisers should be thoroughly cleaned, all debris removed and the interiors washed down, weekly.

Exterior Surfaces

The exterior surfaces must be cleaned with a mild detergent and warm water to protect and maintain their attractive finish. **NEVER USE ABRASIVE CLEANSERS OR SCOURING PADS.**

Interior Surfaces

The interior surfaces may be cleaned with most domestic detergents, ammonia based cleaners and sanitizing solutions with no harm to the surface. Self contained models empty into a limited capacity evaporation pan, which will overflow if excess water is used in cleaning.

DO NOT Use:

Abrasive cleansers and scouring pads, as these will mar the finish or coarse paper towels on coated glass. DO NOT use ammonia-based cleaners on acrylic parts.

Solvent, oil or acidic based cleaners on any interior surfaces. Do not use high pressure water hoses.

DO NOT flood merchandiser with water. **NEVER INTRODUCE WATER FASTER THAN THE WASTE OUTLET CAN REMOVE IT.** Self contained models empty into an evaporation pan that will overflow if too much water is introduced during cleaning.

Do Use:

Remove the product and all loose debris to avoid clogging the waste outlet. Store product in a refrigerated area such as a cooler. Remove only as much product as can be taken to the cooler in a timely manner. **Disconnect electrical power before cleaning.**

Thoroughly clean all surfaces with soap and hot water. **DO NOT USE STEAM OR HIGH WATER PRESSURE HOSES TO WASH THE INTERIOR.** THESE WILL DESTROY THE MERCHANDISERS' SEALING CAUSING LEAKS AND POOR PERFORMANCE.

Take care to minimize direct contact between fan motors and cleaning or rinse water.

Allow merchandisers to dry before resuming operation. After cleaning is completed, turn on power to the merchandiser.

⚠ WARNING

Do NOT use HOT water on Cold glass Surfaces. This can cause the glass to shatter and could result in personal injury. Allow glass fronts, to warm before applying hot water.

CLEANING DISCHARGE HONEYCOMB

Discharge honeycombs should be cleaned every six months. Dirty honeycombs will cause merchandisers to perform poorly. The honeycombs may be cleaned with a vacuum cleaner.

Soap and water may be used if all water is removed from the honeycomb cells before replacing. Be careful not to damage the honeycomb.

1. Using a flat object such as a screw driver, compress the honeycomb and remove it from its retainer.

2. Clean and dry the honeycomb.

3. After cleaning, replace in reverse order. Damaged honeycomb must be replaced.

CLEANING STAINLESS STEEL SURFACES

Use non-abrasive cleaning materials, and always polish with grain of the steel. Use warm water or add a mild detergent to the water and apply with a cloth. Always wipe rails dry after wetting.

Use alkaline chlorinated or non-chlorine containing cleaners such as window cleaners and mild detergents. Do not use cleaners containing salts as this may cause pitting and rusting of the stainless steel finish. Do not use bleach.

CLEANING UNDER STEP PAN

Remove all product from the merchandiser and place in cooler. Always disconnect electrical power before cleaning.

1. Place a small screw driver between the front grille and step pan. Gently lift the step pan's front lip up. Grasp the step pan with both hands to remove. Always wear gloves when removing step pan.

2. Use non-abrasive cleaning materials and a mild detergent to clean the step pan.

⚠ CAUTION

DO NOT FLOOD!
Use only enough water necessary to clean surface. Water must not drip down the case!

Never use ammonia based cleansers, abrasive cleansers, or scouring pads.

3. Wipe down the insides of the merchandiser with a mild detergent, and replace step pan.

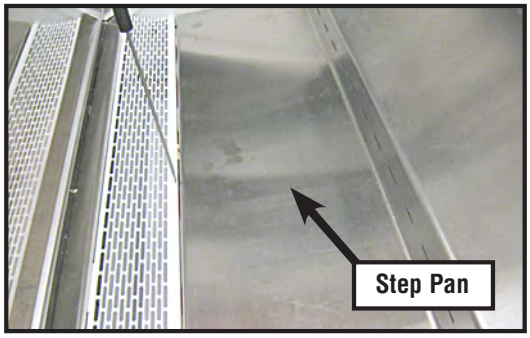

CLEANING THERMOMETER

Remove the two screws holding the thermometer to its mounting bracket. Remove the sensing element from its clip. Clean the element with water and mild detergent solution. Ensure the sensing element is wiped clean of any residue to ensure proper temperature readings.

CLEANING COILS

Condenser coils should be cleaned at least once per month. Additional cleaning may be needed depending on the operational environment. A dirty condenser blocks normal airflow through the coils.

NEVER USE SHARP OBJECTS AROUND COILS. **Use a soft brush or vacuum brush to clean debris from coils.** ***Do not puncture coils!*** Do not bend fins. Contact an authorized service technician if a coil is punctured, cracked, or otherwise damaged.

ICE in or on the coil indicates the refrigeration and defrost cycle is not operating properly. Contact an authorized service technician to determine the cause of icing, and to make adjustments as necessary. To maintain product integrity, move all product to a cooler until the unit has returned to normal operating temperatures.

Airflow blockage increases energy consumption and reduces the merchandiser's ability to maintain operating temperature.

To clean the coils, use a vacuum cleaner with a wand attachment and a soft (non-metallic) brush to remove dirt and debris. Do not bend coil fins. Always wear gloves and protective eye wear when cleaning near sharp coil fins and dust particles.

CLEANING EVAPORATION PAN

The condensate water outlet for self contained models empties into a limited capacity evaporation pan.

Debris or dirt accumulation inside the condensate evaporation pan will reduce the pan's evaporation capacity and cause premature heater failure. The evaporation pan waste water will overflow and spill onto the floor if the heater is not properly operating.

WARNING

SHUT FANS OFF DURING CLEANING PROCESS.

Remove accumulated debris from the evaporation pan. Wipe down heater coil with a cloth and warm water. Be sure to remove any dirt, debris or liquids from the heater coil. Water introduced during cleaning will cause the evaporation pan to overflow.

REMOVING SCRATCHES FROM BUMPER

Most scratches and dings can be removed using the following procedure.

1. Use steel wool to smooth out the surface area of the bumper.
2. Clean area.
3. Apply vinyl or car wax and polish surface for a smooth glossy finish.

PRECAUTION

CLEANING PRECAUTIONS

When Cleaning:

- Do not use high pressure water hoses
- Do not introduce water faster than waste outlet can drain
- NEVER INTRODUCE WATER ON SELF CONTAINED UNIT WITH AN EVAPORATION PAN
- NEVER USE A CLEANING OR SANITIZING SOLUTION THAT HAS OIL BASE (these will dissolve the butyl sealants) or an AMMONIA BASE (this will corrode the copper components of the merchandiser)
- TO PRESERVE THE ATTRACTIVE FINISH:
- Use a water and a mild detergent for the exterior only
- Do NOT use a chlorinated cleaner on any surface
- Do NOT use abrasives or steel wool scouring pads (these will mar the finish)

Self-Contained Refrigeration Equipment Maintenance Check List

***** Warranty does not cover issues caused by improper installation or lack of basic preventative maintenance. *****

Record starting date	
Store Name and Number	
Store Address	
Unit Model Number	
Unit Serial Number	
Contractor/Technician	

	Technician									
	PM date									
PM activity-For visual inspection items, denote "ok or complete" in the column to right when PM has been performed. For measured data requested, record data requested in the appropriate column to the right	Quarterly	Semi-Annually	Q1	Q2	Q3	Q4	Q1	Q2	Q3	Q4
Check in with store manager, record any complaints or issues they have with unit.	X									
Look unit over for any damage, vibrations or abnormal noise.	X									
Verify unit is level side to side and front to rear.	X									
Confirm refrigerant lines properly are secured and not touching or rubbing other lines, wires or frame work.	X									
Verify fan motors and motor mounts are tight.	X									
Confirm fan blade/s are tight and not rubbing or hitting.	X									
Make sure all electrical connections, factory and field, are tight.	X									
Verify electrical connections at lamps are they secure and dry.	X									
Check for and replace any frayed or chaffed wiring.	X									
Check all electrical wiring make sure it is secured and not on any sharp edges or hot lines.	X									
Check for air disturbances externall to the unit. Heat and air registers, fans, and doors etc.	X									
Check for water leaks.	X									
Clean evaporator coil/s and fan blade/s. Do not use an acid base cleaner. Rinse off any cleaner residue.		X								
Clean discharge air honeycombs or grilles. Do not use an acid base cleaner. Rinse off any cleaner residue.		X								
Clean condenser coil/s and fan blade/s. Do not use an acid base Cleaner. Rinse off any cleaner residue.		X								
Clean condensate drain pan and drain line.		X								
Verify condensate drain lines are clear and functioning.		X								
Record voltage reading at unit with unit off?		X								
Verify condenser and evaporator fans are working.	X									
Record condenser air inlet temperature	X									
Record condenser air outlet temperature	X									
Is condenser air inlet or air exhaust restricted or recirculating?	X									
Verify there are no visual oil or refrigerant leaks.	X									
Record voltage reading with unit running.		X								
Record compressor amp draw.		X								
Record defrost heater voltage and amp draw.		X								
Record anti-sweat heater voltage and amp draw.		X								
Record case product temperature.	X									
Record unit discharge air temperature.	X									
Record unit return air temperature.	X									
Record ambient conditions around unit (wet Bulb temperature and dry bulb temperature).	X									
Check product loading, do not load beyond the units load limits.	X									
Verify clearances on sides/back of unit.	X									
Check unit controller for proper operation. See controller or 1/0 Manual for proper controller operation.		X								
Confirm door switches function.	X									
Verify unit doors and lids work and are sealed correctly.	X									
Verify that all the panels, shields and covers are in place.	X									

Technician Notes:

Form HSCW03 Rev-29 OCTOBER13

P/N 0525210_C

SERVICE

REPLACING FAN MOTORS AND BLADES

Should it ever be necessary to service or replace the fan motors or blades be certain that the fan blades are reinstalled correctly.

The blades must be installed with raised embossing (part number on plastic blades) positioned as indicated on the parts list.

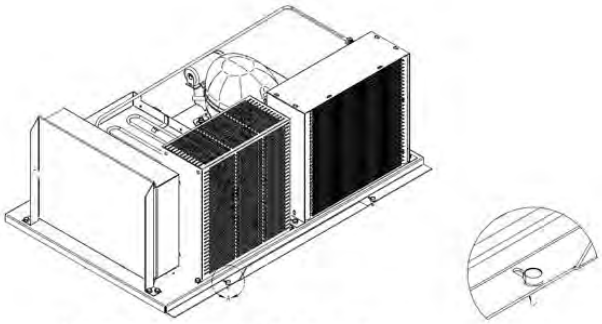

Figure A . Condensing Unit Screws

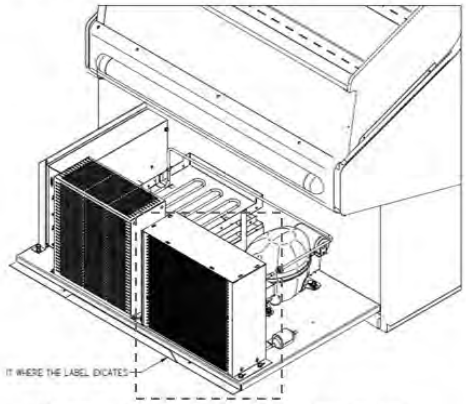

Figure B. Point to pull out condensing unit.

For access to these fans:

1. Remove product and place in a refrigerated area. Turn off power to the merchandiser.

2. Make sure there is no voltage in the refrigerator. Remove front grille to have access to the machine compartment.

3. Remove condensing unit screws. (Fig A).

4. Slide out the condensing unit (Fig B). Be careful using the condensing unit plate to pull out the condensing unit. Make sure not to stress or interfere with other parts.

5. Remove cable tie of discharge tube with correspondent tool, and place a new one once the action is finished (Fig C).

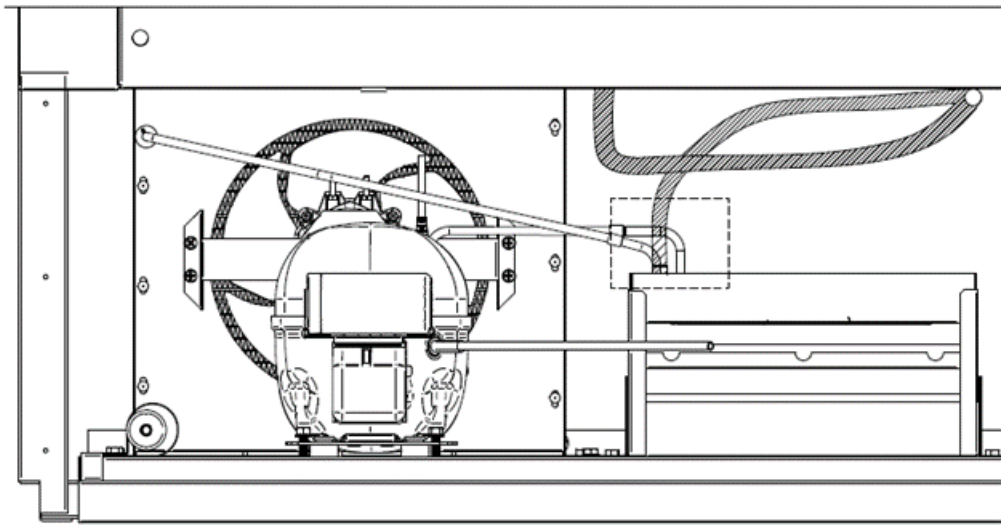

Figure C. Remove cable tie.

6. Disconnect condenser motor harness.

7. Release screws to remove condenser fan assembly (Fig. D).

8. Release motor screws to get to motor / blade assembly (Fig. E).

9. Change the failed part.

10. If the only damaged part is the motor, remove blade.

11. Reverse the process and make sure everything is in place.

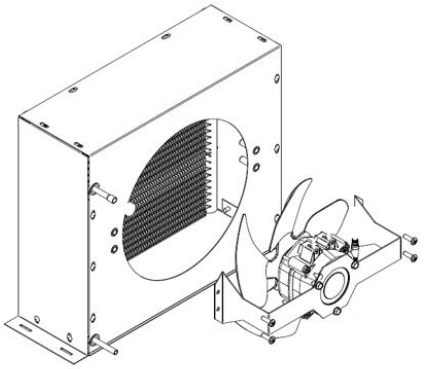

Figure D. Condenser fan bracket screws

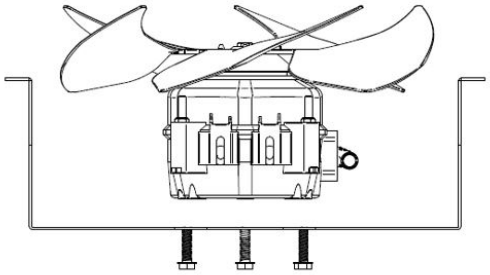

Figure E. Condenser fan motor screws

REPLACING EVAPORATION FAN MOTORS AND BLADES

For access to these fans:

1. Remove product and place in a refrigerated area. Turn off power to the merchandiser.

2. Make sure there is no voltage in the refrigerator.

3. Remove front grille to access the machine compartment.

4. Remove condensing unit screws (Fig. A).

5. Sliding out the condensing unit (Fig. B). Be careful using the condensing unit plate to pull out the condensing unit. Make sure do not stress other parts.

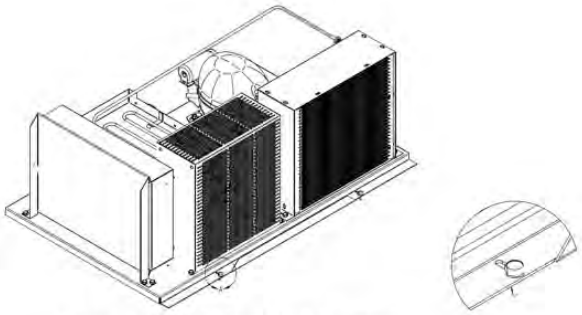

Figure A . Condensing Unit Screws

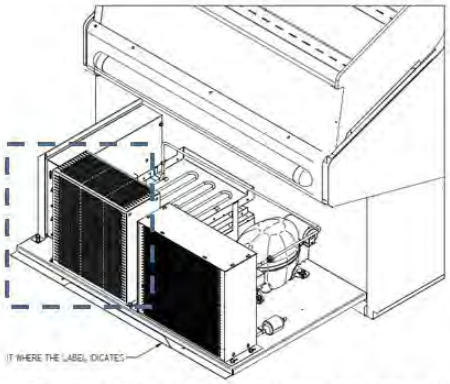

Figure B. Point to pull out condensing unit

WARNING

Product will be degraded and may spoil if allowed to sit in a non-refrigerated area.

6. Remove cable tie of discharge tube with correspondent tool, and place a new one once the action is finished (Fig. C).

7. Disconnect condenser motor harness.

8. Remove hexagonal screw 5/16” (Fig. D) to remove squared fan guard.

9. Release screws to remove evaporation fan assembly (Fig. E).

10. Release motor screws to get motor / blade assembly (Fig. F).

11. Change the failed part.

12. If the only damaged part is the motor, remove blade.

13. Reverse the process and make sure everything is in place.

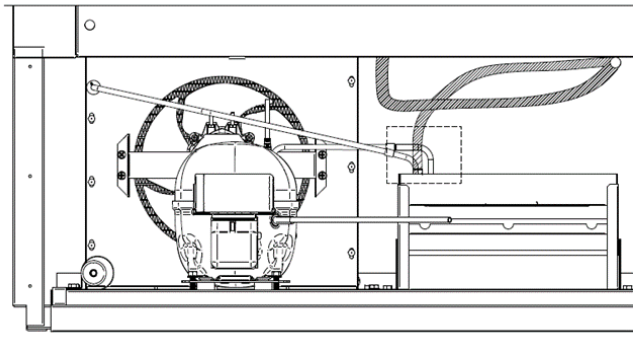

Figure C. Remove cable tie.

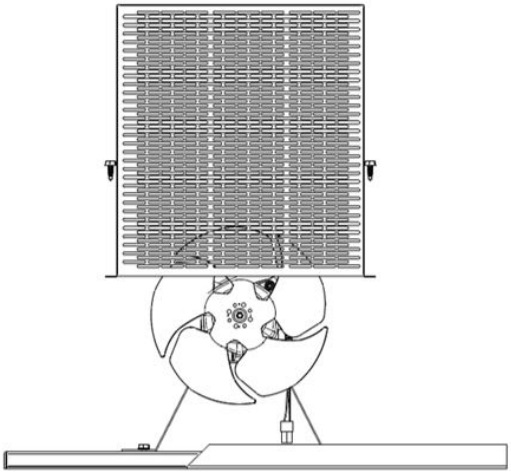

Figure D. Squared fan guard

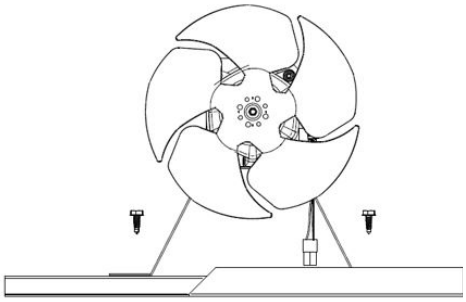

Figure E. Screws attaching fan bracket to condensing unit base.

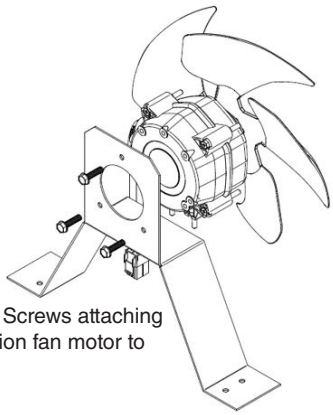

Figure F. Screws attaching evaporation fan motor to bracket.

REPLACING FOOD COMPARTMENT FAN MOTORS AND BLADES

For access to these fans:

1. Remove product and place in a refrigerated area. Turn off power to the merchandiser.

2. Make sure there is no voltage in the refrigerator.

3. Remove step shelf in order to access the evaporator.

4. Disconnect evaporator fan motor harness for each motor.

5. Remove screws (2 on each side - total of 4) to remove evaporation fan bracket from the cabinet Fig. A.

6. Next, remove the screws that attach the fan assembly to the plenum bracket.

7. Change the failed part.

8. If the only damaged part is the motor, remove blade.

9. Reverse the process and make sure everything is in place.

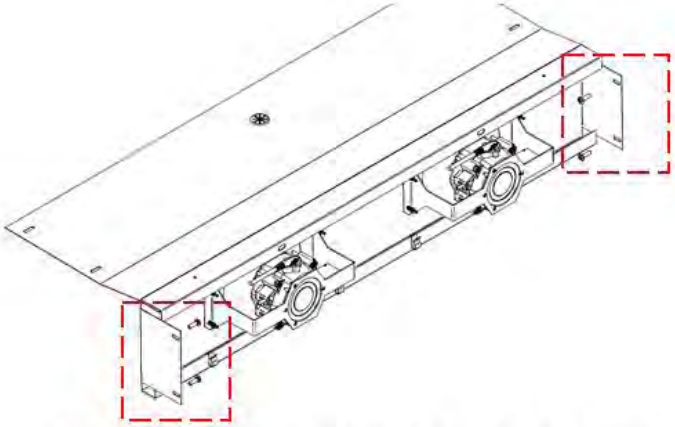

Figure A . Screws attaching bracket to the cabinet

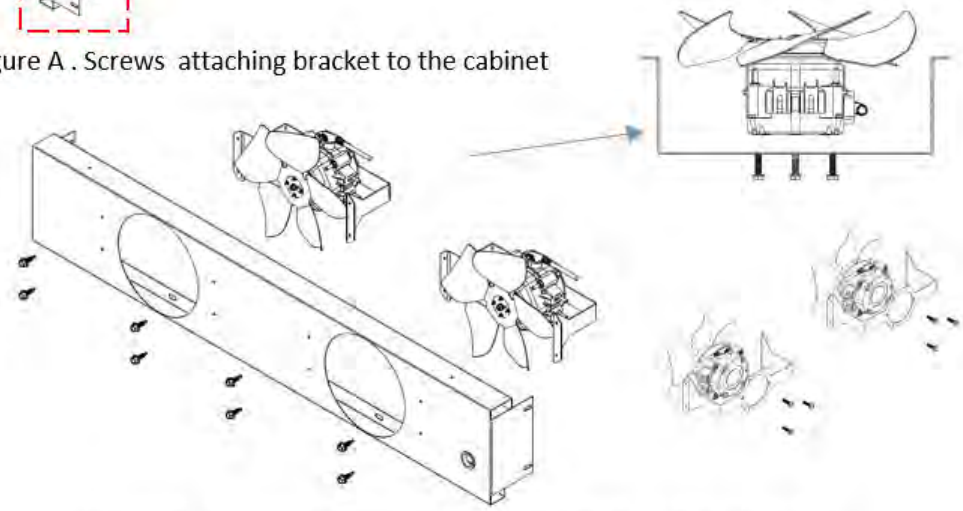

Figure B. Screws attaching plenum bracket to fan assembly.

HUSSMANN®

To obtain warranty information or other support, contact your Hussmann representative. Please include the model and serial number of the product.

Hussmann Corporation, Corporate Headquarters: Bridgeton, Missouri, U.S.A. 63044-2483 01 October 2012