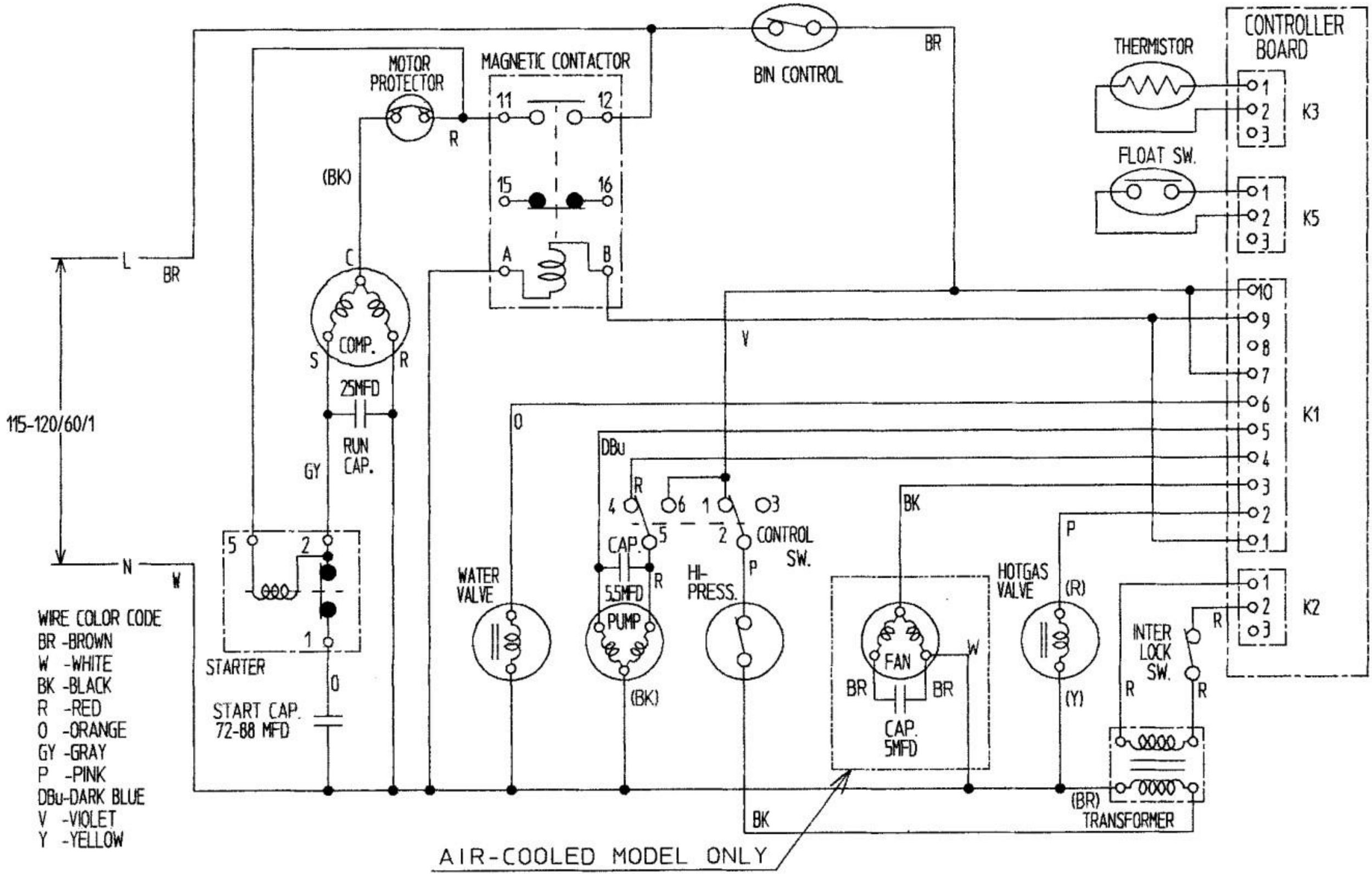
CONTROLLER BOARD
THERMISTOR
K3
FLOAT SW.
K5
K1
K2
BIN CONTROL
BR
MOTOR PROTECTOR
MAGNETIC CONTACTOR
11
12
15
16
A
B
R
(BK)
C
COMP.
S
R
25MFD
RUN CAP.
GY
L
BR
115-120/60/1
N
W
5
2
1
STARTER
START CAP. 72-88 MFD
O
V
DBu
4
6
1
3
5
2
CAP.
5.5MFD
PUMP
(BK)
CONTROL SW.
HI-PRESS.
P
WATER VALVE
BK
FAN
BR
BR
CAP. 5MFD
HOTGAS VALVE
(R)
(Y)
INTER LOCK SW.
(BR)
TRANSFORMER
WIRE COLOR CODE
BR -BROWN
W -WHITE
BK -BLACK
R -RED
O -ORANGE
GY -GRAY
P -PINK
DBu-DARK BLUE
V -VIOLET
Y -YELLOW
AIR-COOLED MODEL ONLY

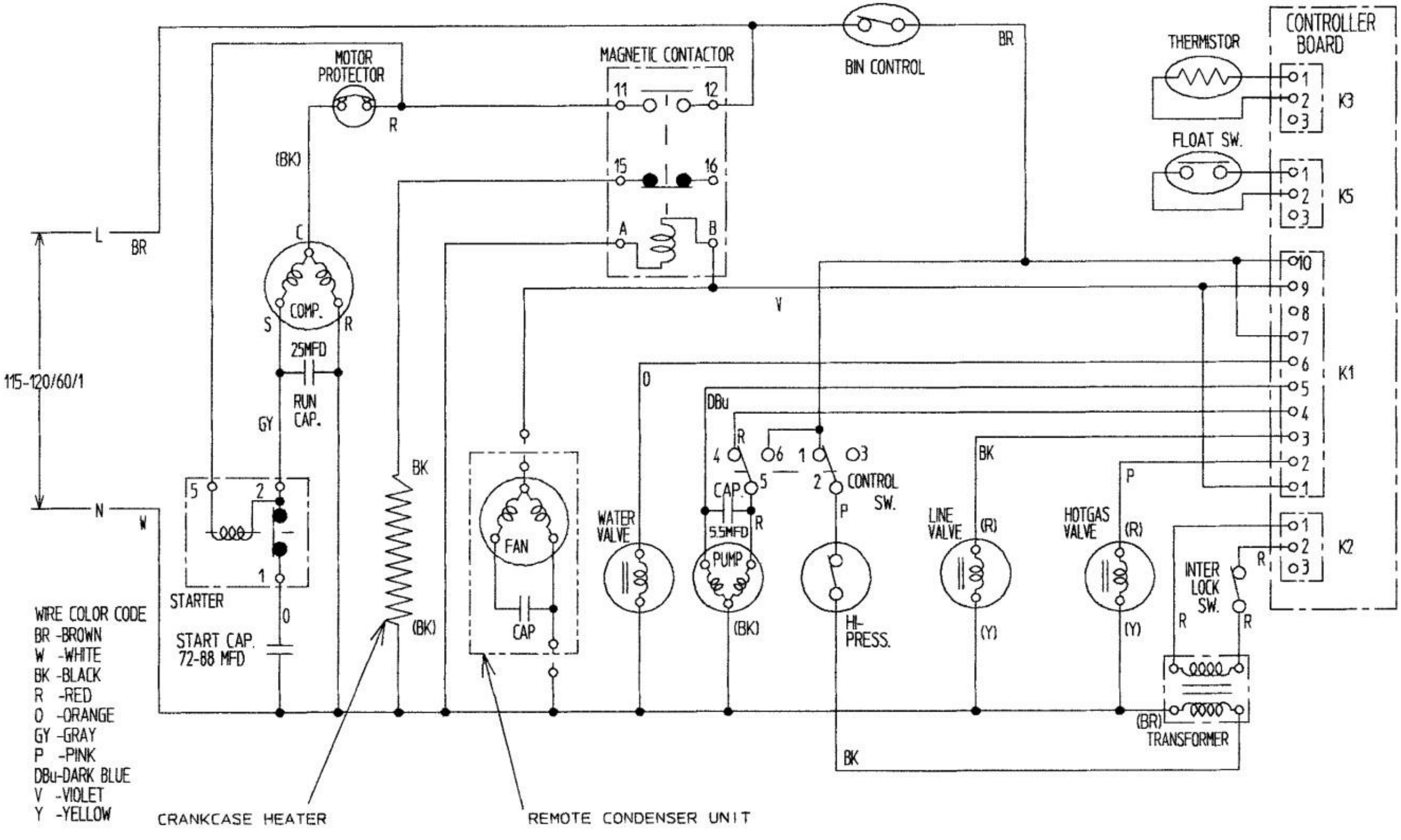
MOTOR PROTECTOR
MAGNETIC CONTACTOR
BIN CONTROL
THERMISTOR
CONTROLLER BOARD
FLOAT SW.
K3
K5
K1
K2
L
BR
N
W
115-120/60/1
(BK)
R
C
COMP.
S
25MFD
RUN CAP.
GY
STARTER
START CAP. 72-88 MFD
BK
(BK)
FAN
CAP
WATER VALVE
O
DBu
CAP.
5.5MFD
PUMP
CONTROL SW.
HI-PRESS.
LINE VALVE
HOTGAS VALVE
(Y)
INTER LOCK SW.
TRANSFORMER
V
P
WIRE COLOR CODE
BR -BROWN
W -WHITE
BK -BLACK
R -RED
O -ORANGE
GY -GRAY
P -PINK
DBu-DARK BLUE
V -VIOLET
Y -YELLOW
CRANKCASE HEATER
REMOTE CONDENSER UNIT