MAXX COLD X-series

REACH-IN REFRIGERATORS AND FREEZERS

Service, Installation and Care Manual

Please read this manual completely before attempting to install or operate this equipment! Notify carrier of damage! Inspect all components immediately. See page 2.



Refrigerators and Freezers

NOTE

IMPORTANT INFORMATION
READ BEFORE USE
PLEASE SAVE THESE INSTRUCTIONS!

CONTENTS

RECEIVING & INSPECTING THE EQUIPMENT.....2
SPECIFICATIONS.....3
INSTALLATION 4
OPERATION.....5
MAINTENANCE.....6-7
WIRING DIAGRAM.....8-15

SERIAL NUMBER INFORMATION

The serial number of all self-contained refrigerators and freezers is located inside the unit on the left hand side near the top on the wall.

Always have the serial number of your unit available when calling for parts or service.

This manual covers standard units only. If you have a custom unit, consult the customer service department at the number listed on the last page.

RECEIVING & INSPECTING THE EQUIPMENT

Even though most equipment is shipped crated, care should be taken during unloading so the equipment is not damaged while being moved into the building.

1. Visually inspect the exterior of the package and skid or container. Any damage should be noted and reported to the delivering carrier immediately.
2. If damaged, open and inspect the contents with the carrier.
3. In the event that the exterior is not damaged, yet upon opening, there is concealed damage to the equipment notify the carrier. Notification should be made verbally as well as in written form.
4. Request an inspection by the shipping company of the damaged equipment. This should be done within 10 days from receipt of the equipment.
5. Be certain to check the compressor compartment housing and visually inspect the refrigeration package. Be sure lines are secure and base is still intact.
6. Freight carriers can supply the necessary damage forms upon request.
7. Retain all crating material until an inspection has been made or waived.

SPECIFICATIONS

SOLID DOOR REFRIGERATORS									
MODEL#	V/Hz/Ph	AMPS	STORAGE CAPACITY Cu-ft	SHELF CAPACITY Sq-ft	HP	BTU	CHARGE OZ	SHIP WEIGHT LBS	NEMA PLUG
MXCR-23FD	115/60/1	6	23	14.0	3/8	3200	12.0	350	5-15P
MXCR-49FD	115/60/1	9	49	28.1	1/2	5800	18.7	518	5-15P
MXCR-72FD	115/60/1	10	72	42.1	3/4	7625	21.2	669	5-15P

SOLID DOOR FREEZERS									
MODEL#	V/Hz/Ph	AMPS	STORAGE CAPACITY Cu-ft	SHELF CAPACITY Sq-ft	HP	BTU	CHARGE OZ	SHIP WEIGHT LBS	NEMA PLUG
MXCF-23FD	115/60/1	11	23	14.0	5/8	2325	14.1	364	5-15P
MXCF-49FD	115/60/1	12	49	28.1	1	3650	25	568	5-15P
MXCF-72FD	115/60/1	16	72	42.1	1-1/4	4500	28.9	776	5-20P

INSTALLATION

Location

Units represented in this manual are intended for indoor use only. Be sure the location chosen has a floor strong enough to support the total weight of the cabinet and contents. A fully loaded unit can weigh as much as 1500 pounds. Reinforce the floor as necessary to provide for maximum loading. For the most efficient refrigeration, be sure to provide good air circulation inside and out.

Inside cabinet: Do not pack refrigerator so full that air cannot circulate. The refrigerated air is discharged at the top rear of the unit. It is important to allow for proper air flow from the top rear to the bottom of the unit. Obstructions to this air flow can cause evaporator coil freeze ups and loss of temperature or overflow of water from the evaporator drain pan. The shelves have a rear turn up on them to prevent this. However, bags and other items can still be located to the far rear of the cabinet. Air is brought into the evaporator coil with fans mounted to the front of the coil. Prevent obstruction by locating large boxes and tall stacks of product to the bottom of the cabinet.



Outside cabinet: Be sure that the unit has access to ample air. Avoid hot corners and locations near stoves and ovens.
It is recommended that the unit be installed no closer than 2" from any wall with at least 12" of clear space above the unit.

Leveling

A level cabinet looks better and will perform better because the doors will line up with the frames properly. the cabinet will not be subject to undue strain and the contents of the cabinet will not move around on the shelves. Use a level to make sure the unit is level from front to back and side to side. Units supplied with legs will have adjustable bullet feet to make the necessary adjustments. If the unit is supplied with casters, no adjustments are available. Ensure the floor where the unit is to be located is level.

Stabilizing

All models are supplied with casters for your convenience, ease of cleaning underneath and for mobility. It is very important, however, that the cabinet be installed in a stable condition with the front wheels locked while in use.

Should it become necessary to lay the unit on its side or back for any reason, allow at least 24 hours before start-up so as to allow compressor oil to flow back to the sump. Failure to meet this requirement can cause compressor failure and unit damage.



Unit repairs will not be subject to standard unit warranties due to improper installation procedures.

Electrical connection

Refer to the amperage data on page 3, the serial tag, your local code or the National Electrical Code to be sure the unit is connected to the proper power source. A protected circuit of the correct voltage and amperage must be run for connection of the line cord, or permanent connection to the unit.



The on/off switch must be turned to OFF and the unit disconnected from the power source whenever performing service, maintenance functions or cleaning the refrigerated area.

OPERATION

Do not throw items into the storage area. Failure to heed these recommendations could result in damage to the interior of the cabinet.

CAUTION

Refrigeration cycle

Refrigerators: During the refrigeration cycle, the evaporator fans will run continuously even when one or more doors are open. The door switch will activate the lights when opened.

1. Every 6 hours, the unit will be off and let the evaporator coil clear up the ice, the controller now display defrost symbol. When the coil temperature reach 41° F or after 20 minutes, the unit start to work again.
2. Anti-condensation heaters on door frames work in conjunction with the compressor.
3. The factory setting for temperature range is 34° to 38° F.

Freezers: During the refrigeration cycle the controller supplies power to the condensing unit and evaporator fan motors. The evaporator fans will run at any time when the evaporator coil temperature is below 35° F, they will also keep running during door openings but cycle off during a defrost period. The door switch will activate the lights when opened.

1. Every 6 hours, the unit will be off and electric heater will be on to clear up the ice, the controller now display defrost symbol. When the coil temperature reach 45° F or after 20 minutes, the unit start to work again.
2. Anti-condensation heaters on door frames work in conjunction with the compressor.
3. The factory setting for temperature range is -7° to -3° F.

On/Off Switch:

An on/off switch is located on the front of the top shroud. When the unit is on, the switch will glow green.

SOLID-S TA TE THERMOS TA T DESCRIPTIONS :

1. FRONT PANEL COMMANDS



SET: To display target set point; in programming mode it selects a parameter or confirm an operation.

(DEF) To start a manual defrost

(UP): To see the last temperature alarm happened; in programming mode it browses the parameter codes or increases the displayed value.

(DOWN) To see the last temperature alarm happened; in programming mode it browses the parameter codes or decreases the displayed value.

KEY COMBINATIONS:

+ To lock & unlock the keyboard.

SET + To enter in programming mode.

SET + To return to the room temperature display.

1.1 USE OF LEDS

Each LED function is described in the following table.

LED	MODE	FUNCTION
❄	ON	Compressor enabled
❄	Flashing	-Programming Phase (flashing with ❄) - Anti-short cycle delay enabled
❄	ON	Defrost enabled
❄	Flashing	- Programming Phase (flashing with ❄) - Drip time in progress
	ON	Fans enabled
	Flashing	Fans delay after defrost in progress.
	ON	An temperature alarm happened

2. MAIN FUNCTIONS

2.1 HOW TO SEE THE SETPOINT

SET

1. Push and immediately release the **SET** key: the display will show the Set point value;
2. Push and immediately release the **SET** key or wait for 5 seconds to display the probe value again.

2.2 HOW TO CHANGE THE SETPOINT

1. Push the **SET** key for more than 2 seconds to change the Set point value;
2. The value of the set point will be displayed and the ❄ LED starts blinking;
3. To change the Set value push the ▲ or ▼ arrows within 10s.
4. To memorise the new set point value push the **SET** key again or wait 10s.

2.3 HOW TO START A MANUAL DEFROST

Push the **DEF** key for more than 2 seconds and a manual defrost will start.

2.4 HOW TO LOCK THE KEYBOARD

1. Keep pressed for more than 3 s the UP and DOWN keys.
2. The "POF" message will be displayed and the keyboard will be locked. At this point it will be possible only to see the set point or the MAX o Min temperature stored
3. If a key is pressed more than 3s the "POF" message will be displayed.

2.5 TO UNLOCK THE KEYBOARD

Keep pressed together for more than 3s the ▲ and ▼ keys, till the **"Pon"** message will be displayed.

3. ALARM SIGNALS

Message	Cause	Outputs
"P1"	Room probe failure	Compressor output according to par. "Con" and "COF"
"P2"	Evaporator probe failure	Defrost end is timed
"P3"	Condenser probe failane	Outputs unchanged.
"HA"	Maximum temperature alarm	Outputs unchanged.
"LA"	Minimum temperature alarm	Outputs unchanged.
"dA"	Door open	Compressor and fans restarts
"EA"	External alarm	Output unchanged.
"CA"	Serious external alarm (i1F=bAL)	All outputs OFF.
"CSd"	Condenser alarm	All outputs OFF.

3.1 HOW TO SEE THE ALARM AND RESET THE RECORDED ALARM

1. Push the UP or Down key, the alarm signals are displayed.
2. When the signal is displayed, hold the SET key untill the "rst" message is displayed, and push the SET again, the "rst" message starts blinking and the normal temperature will be displayed.

MAINTENANCE



The power switch must be turned to OFF and the unit disconnected from the power source whenever performing service, maintenance functions or cleaning the refrigerated area.

Refrigerators and Freezers

The interior and exterior can be cleaned using soap and warm water. If this isn't sufficient, try ammonia and water or a nonabrasive liquid cleaner. When cleaning the exterior, always rub with the "grain" of the stainless steel to avoid marring the finish.

Do not use an abrasive cleaner because it will scratch the stainless steel and plastic and can damage the breaker strips and gaskets.

Cleaning the Condenser Coil

The condenser coil requires regular cleaning, recommended is every 90 days. In some instances though you may find that there is a large amount of debris and dust or grease accumulated prior to the 90 days time frame. In these cases the condenser coil should be cleaned every 30 days.

If the build up on the coil consists of only light dust and debris the condenser coil can be cleaned with a simple brush, heavier dust build up may require a vacuum or even compressed air to blow through the condenser coil.

If heavy grease is present there are de-greasing agents available for refrigeration use and specifically for the condenser coils. The condenser coil may require a spray with the de-greasing agent and then blown through with compressed air.

Failure to maintain a clean condenser coil can initially cause high temperatures and excessive run times, continuous operation with drity or clogged condenser coils can result in compressor failures. Neglecting the condenser coil cleaning procedures will void any warranties associated with the compressor or cost to replace the compressor.



Never use a high pressure water wash for this cleaning procedure as water can damage the electrical components located near or at the condenser coil.

In order to maintain proper refrigeration performance, the condenser fins must be cleaned of dust, dirt and grease regularly. It is recommended that this be done at least every three months. If conditions are such that the condenser is totally blocked in three months, the frequency of cleaning should be increased. Clean the condenser with a vacuum cleaner or stiff brush. If extremely dirty, a commercially available condenser cleaner may be required.

Stainless Steel Care and Cleaning

To prevent discoloration of rust on stainless steel several important steps need to be taken. First, we need to understand the properties of stainless steel. Stainless steel contains 70-80% iron which will rust. It also contains 12-30% chromium which forms an invisible passive film over the steels surface which acts as a shield against corrosion. As long as the protective layer is intact, the metal is still stainless. If the film is broken or contaminated, outside elements can begin to breakdown the steel and begin to form rust of discoloration.

Proper cleaning of stainless steel requires soft cloths or plastic scouring pads.



NEVER USE STEEL PADS, WIRE BRUSHES OR SCRAPERS!

Cleaning solutions need to be alkaline based or non-chloride cleaners. Any cleaner containing chlorides will damage the protective film of the stainless steel. Chlorides are also commonly found in hard water, salts, and household and industrial cleaners. If cleaners containing chlorides are used be sure to rinse repeatedly and dry thoroughly upon completion.

Routine cleaning of stainless steel can be done with soap and water. Extreme stains or grease should be cleaned with a non-abrasive cleaner and plastic scrub pad. It is always good to rub with the grain of the steel. There are also stainless steel cleaners available which can restore and preserve the finish of the steels protective layer.

Early signs of stainless steel breakdown can consist of small pits and cracks. If this has begun, clean thoroughly and start to apply stainless steel cleaners in attempt to restore the passivity of the steel.



Never use an acid based cleaning solution! Many food products have an acidic content which can deteriorate the finish. Be sure to clean the stainless steel surfaces of ALL food products. Common items include, tomatoes, peppers and other vegetables.

MAINTENANCE CONTINUED

If your freezer seems to vibrate excessively when the compressor is running, loosen(but do not remove) the bolts on the compressor.

MAINTENANCE

Gasket Maintenance

Gaskets require regular cleaning to prevent mold and mildew build up and also to keep the elasticity of the gasket. Gasket cleaning can be done with the use of warm soapy water. Avoid full strength cleaning products on gaskets as this can cause them to become brittle and prevent proper seals. Also, never use sharp tools or knives to scrape or clean the gasket which could possibly tear the gasket and rip the bellows.

Gaskets can easily be replaced and do not require the use of tools or authorized service persons. The gaskets are "Dart" style and can be pulled out of the grove in the door and new gaskets can be "pressed" back into place.

Doors/Hinges

Over time and with heavy use doors the hinges may become loose. If it is noticed that the door is beginning to sag, it may become necessary to tighten the screws that mount the hinge brackets to the frame of the unit. If the doors are loose or sagging this can cause the hinge to pull out of the frame which may damage both the doors and the door hinges. In some cases this can require qualified service agents or maintenance personnel.

Drain Maintenance

Each unit has a drain located inside the unit which removes the condensation from the evaporator coil and evaporates it at an external condensate evaporator pan. Each drain can become loose or disconnected from moving or bumping the drain. If you notice excessive water accumulation on the inside of the unit be sure the drain tube is connected from the evaporator housing to the condensate evaporator drain pan. If water is collected underneath the unit you may want to check the condensate evaporator drain tube to be sure it is still located inside the drain pan. The leveling of the unit is important as the units are designed to drain properly when on a level surface, if your floor is not level this can also cause drain problems. Be sure all drain lines are free of obstructions typically food product is found blocking drain lines causing water to back up and overflow the drain pans.

Open the top shroud

Loosen the screws on the bottom of top shroud, then swing top shroud up 180° until it rest on top of the cabinet.

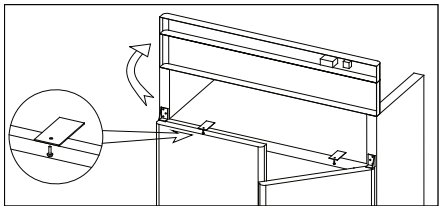

Door Replacement and Adjustment

1. Open the top shroud and swing it up until it rest on top of the unit.
2. Open the door to about 100-110° until the door remain open.
3. Loosen and remove the top screw of self-closing cartridge and the three hinge screws, then slide the door up and out.
4. Prepare new door. Use a wrench to rotate the square head of the cartridge shaft approximately 120° in the closing direction of the door. The hinge is now preloaded and ready to be secured to the top hinge
5. Hold the door at about 100° from the close position, insert the top hinge over the square shaft of the cartridge so that the hinge is facing the cabinet. Insert the mounting screw and fasten securely.
6. Still holding the the entire door/hinge assembly at about 100°, slide it over the bottom hinge pin, make sure all the alignment then fasten the upper hinge securely
7. Allow the door to freely swing, make sure it swing close by itself with no restriction
8. Plug the unit in and make sure the interior light turn off and active the evap fan when door close
9. If not, adjust the door height by adding the plastic spacer/washer provided to the bottom hinge pin

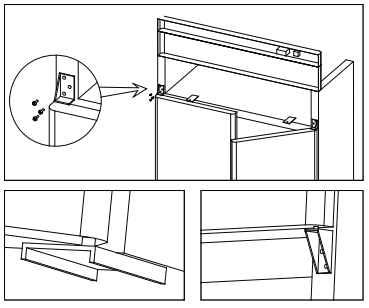

Remove the bottom shroud (apply to bottom-mounted

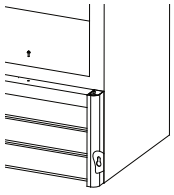

WIRING DIAGRAM

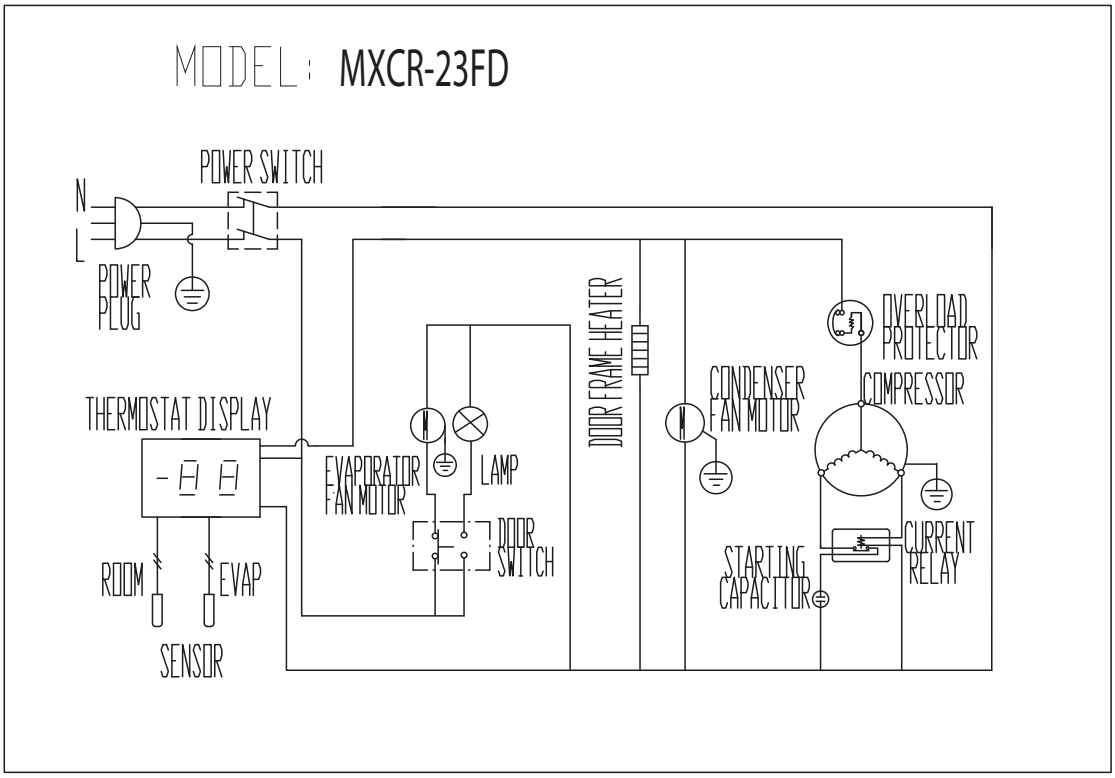

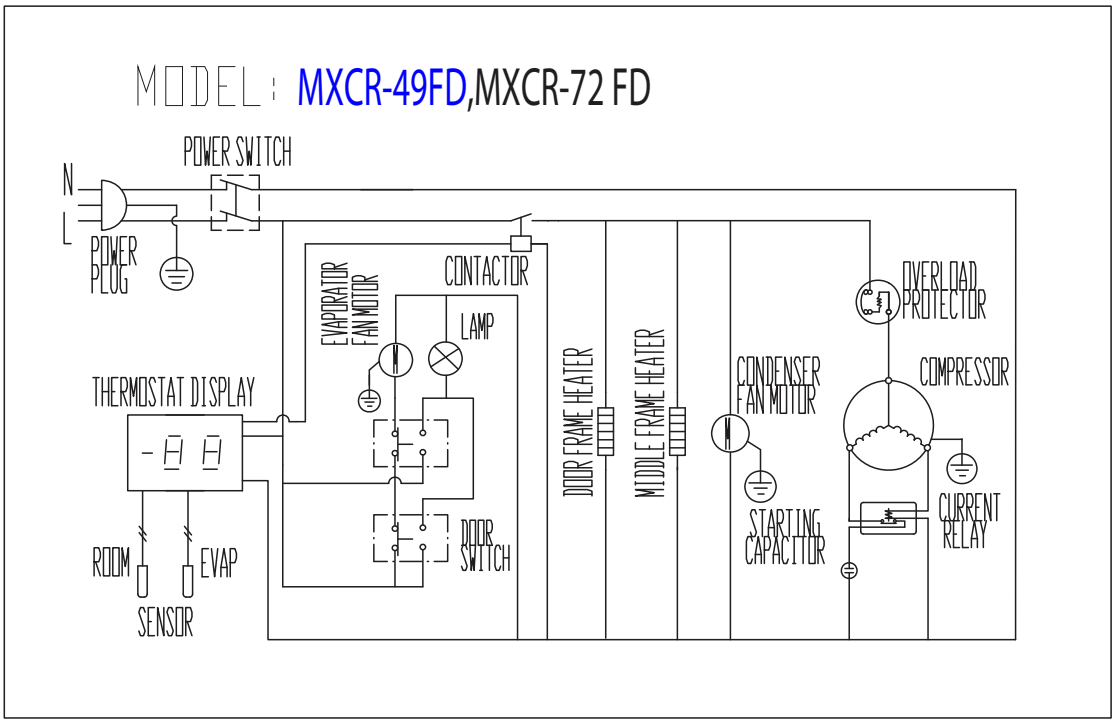

WIRING DIAGRAM

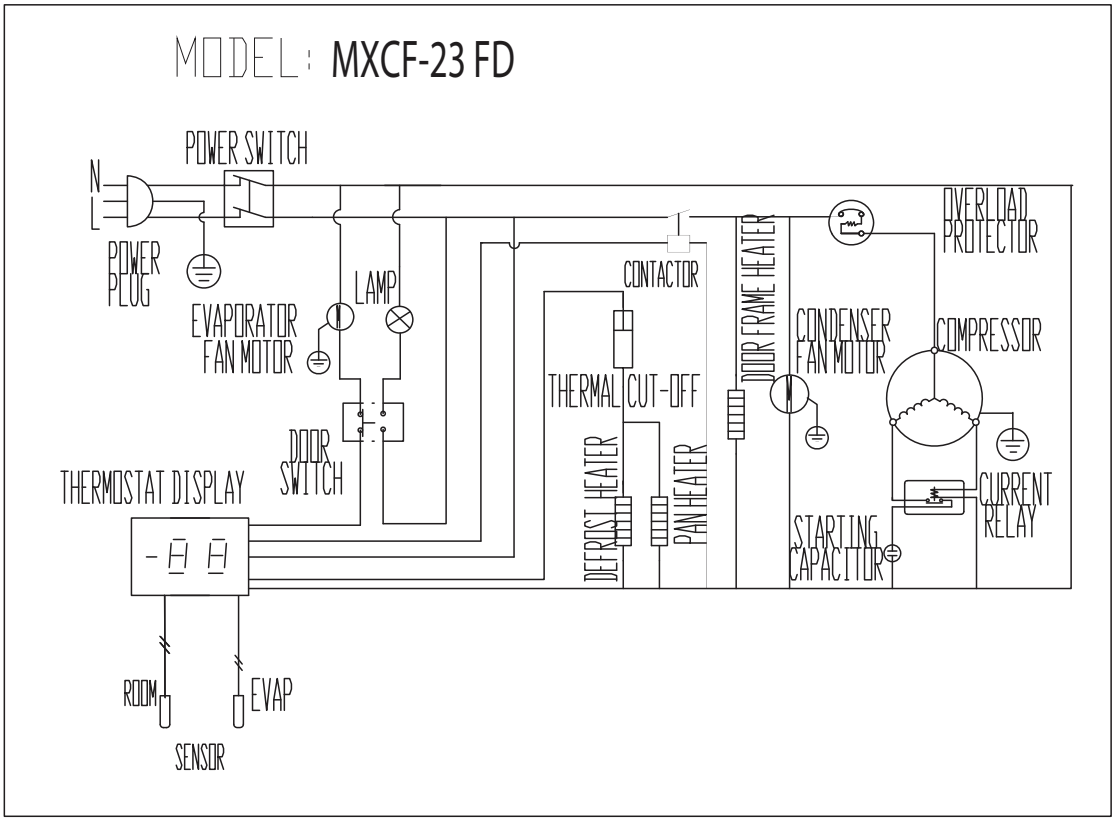

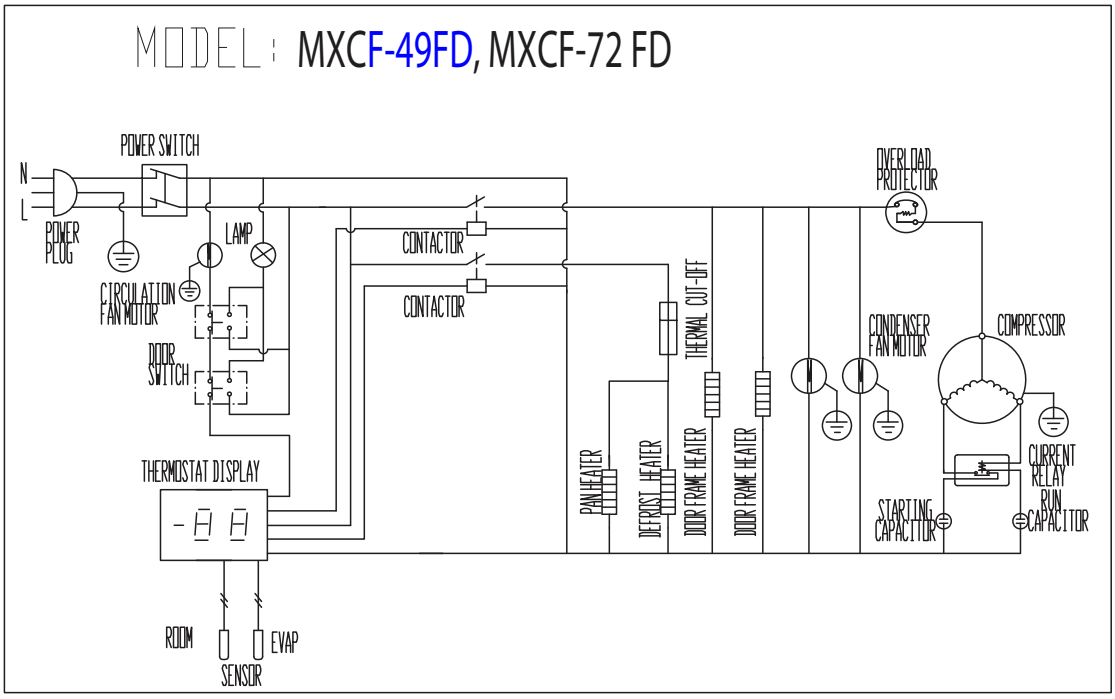

WIRING DIAGRAM

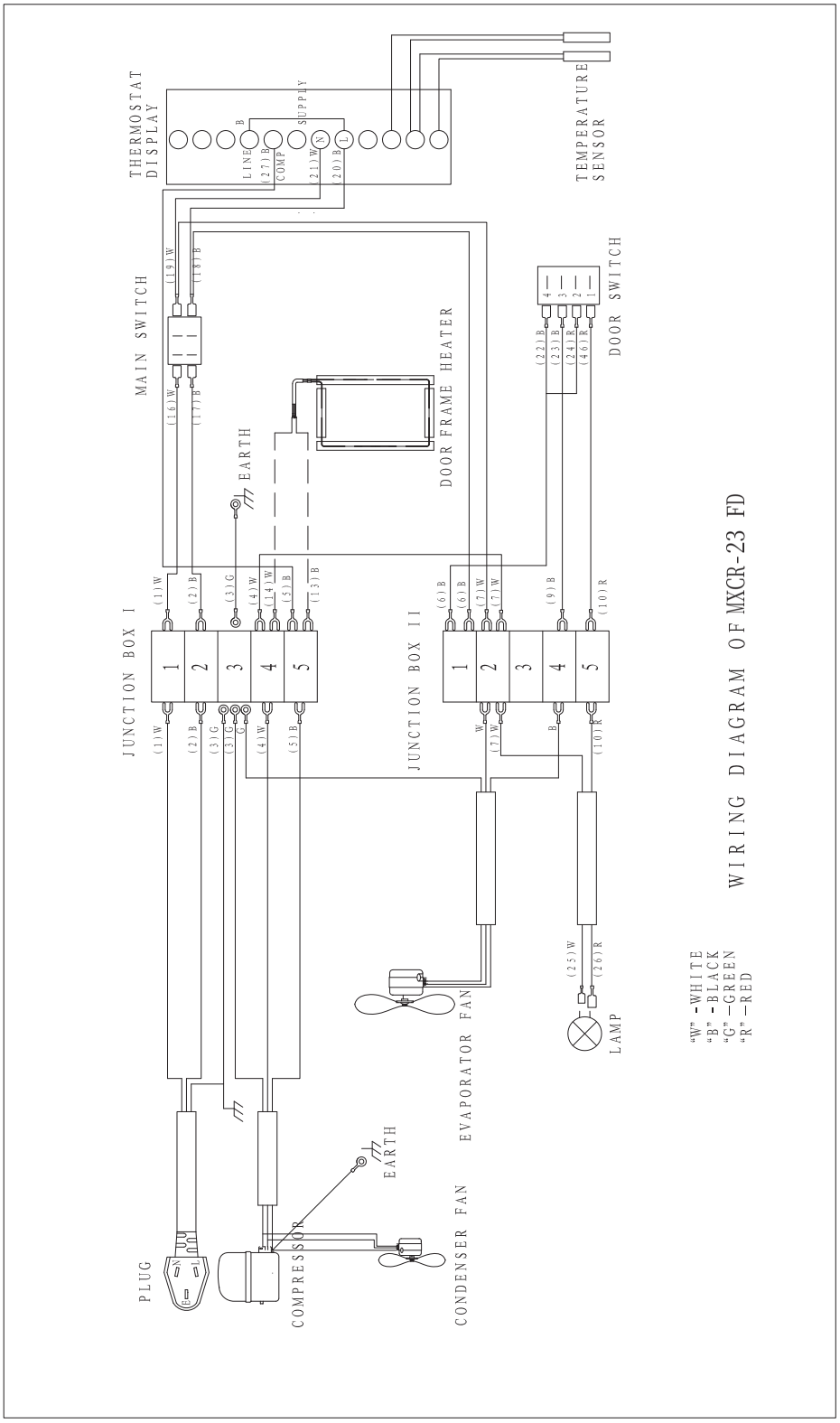

WIRING DIAGRAM

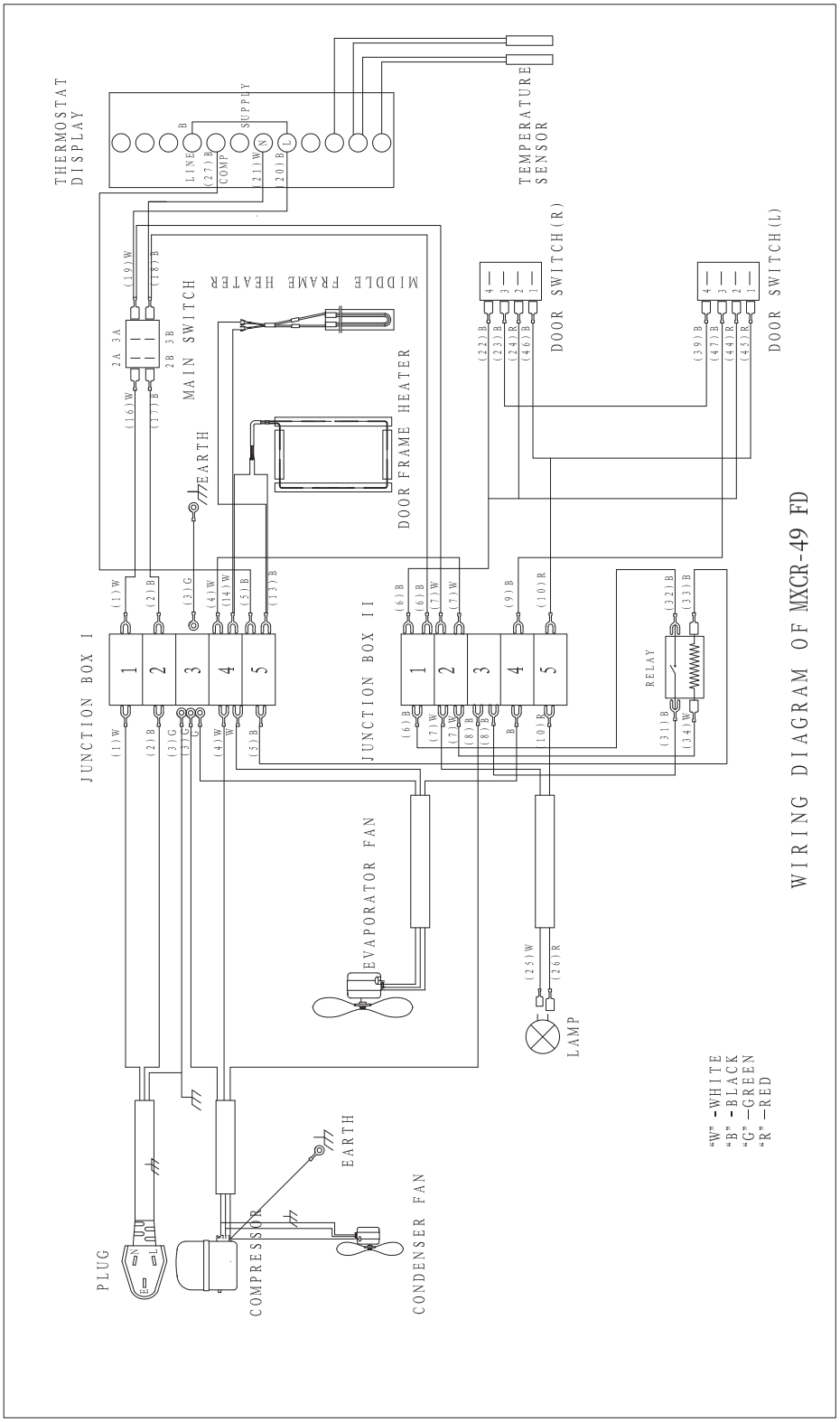

WIRING DIAGRAM

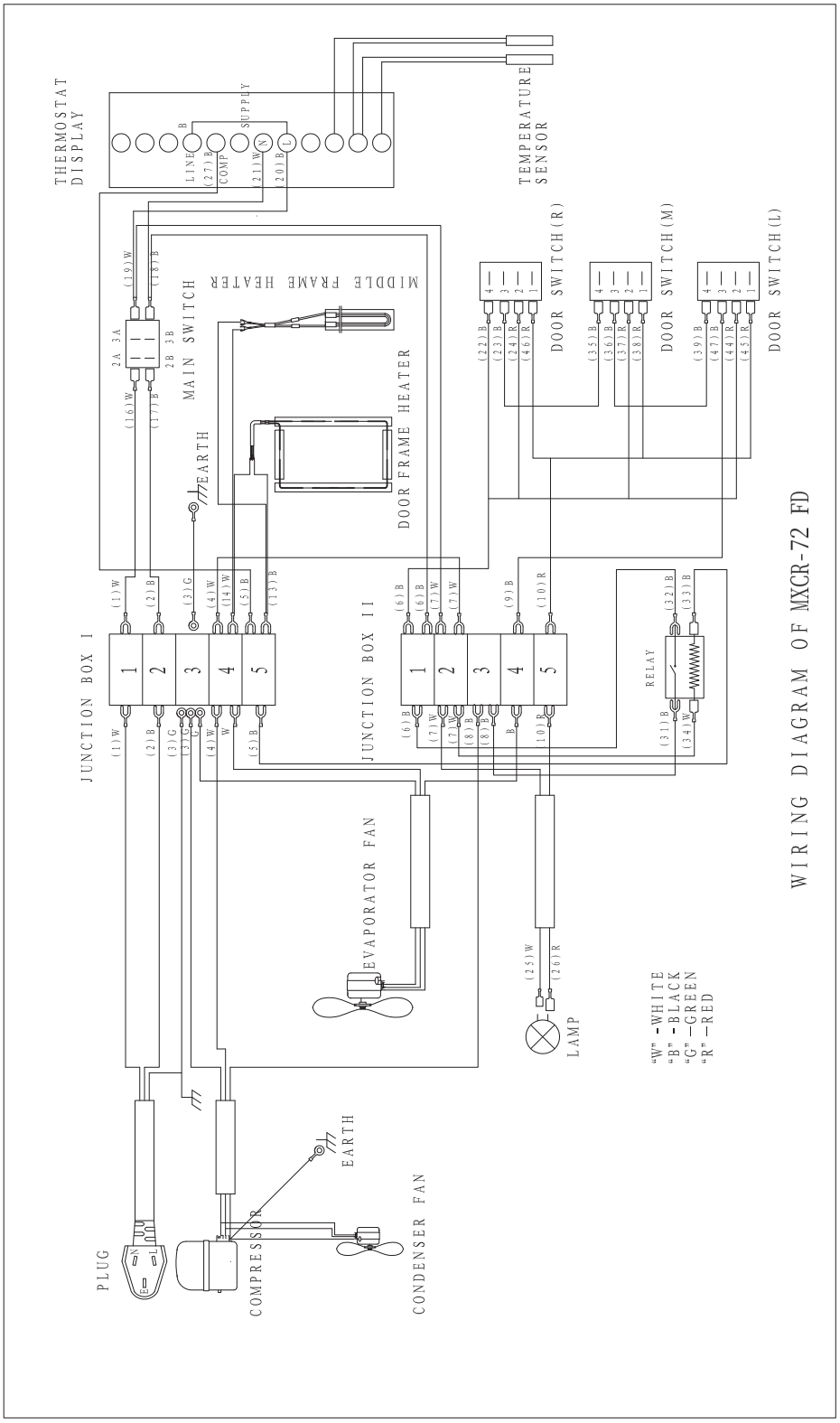

WIRING DIAGRAM

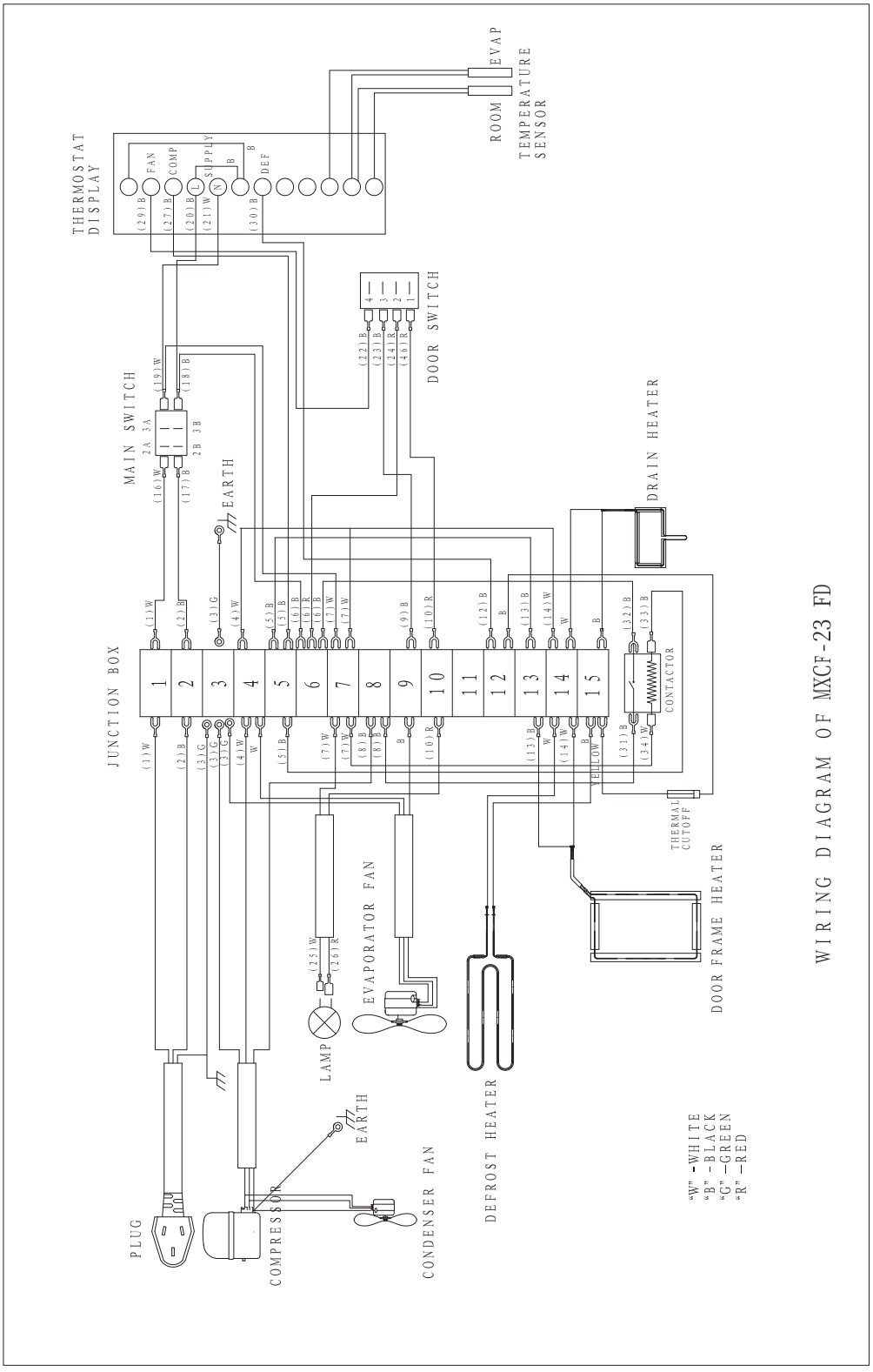

WIRING DIAGRAM

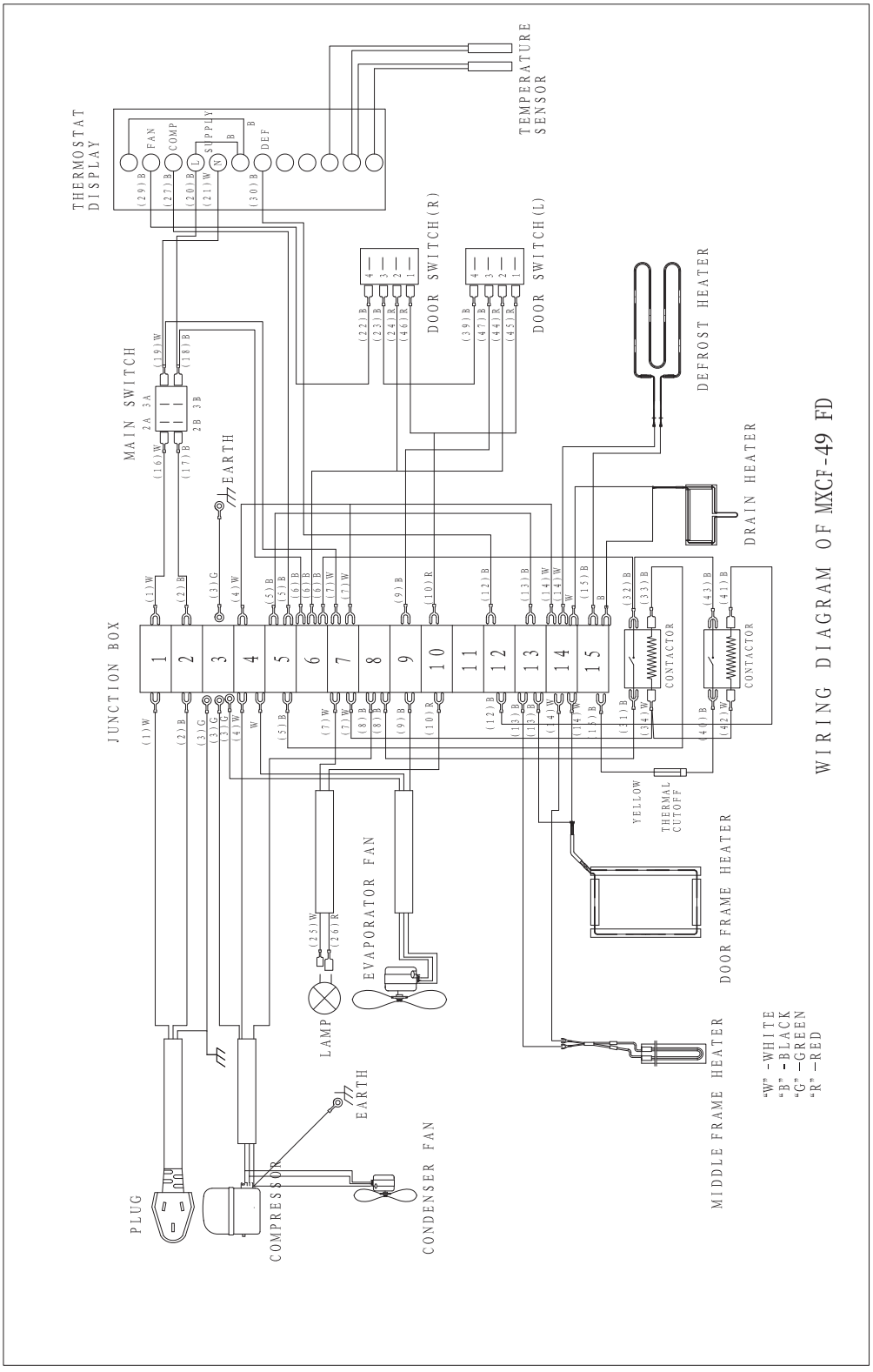

WIRING DIAGRAM

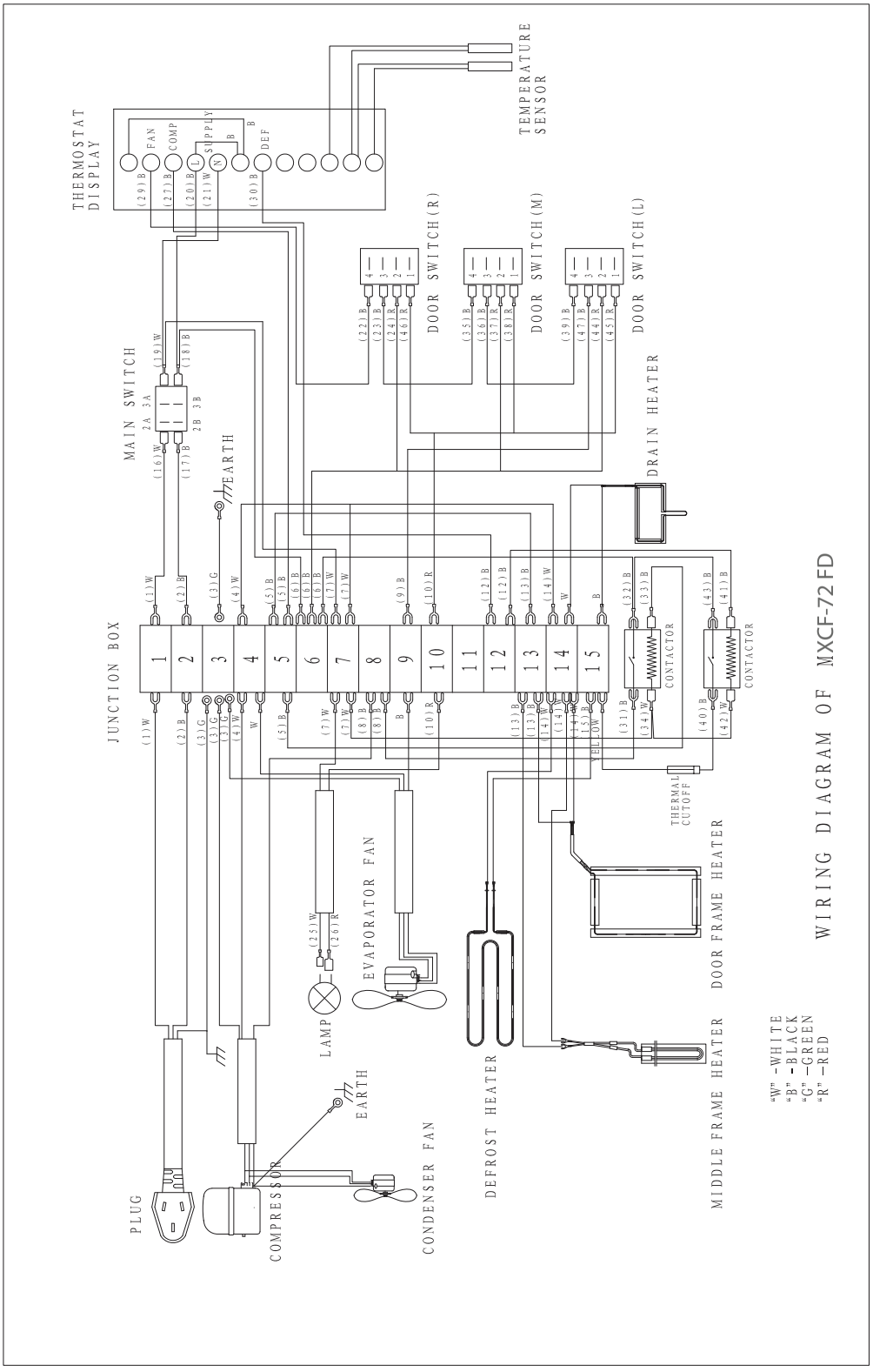

MAXX COLD X-series

MAXXCOLDFOODSERVICE.COM