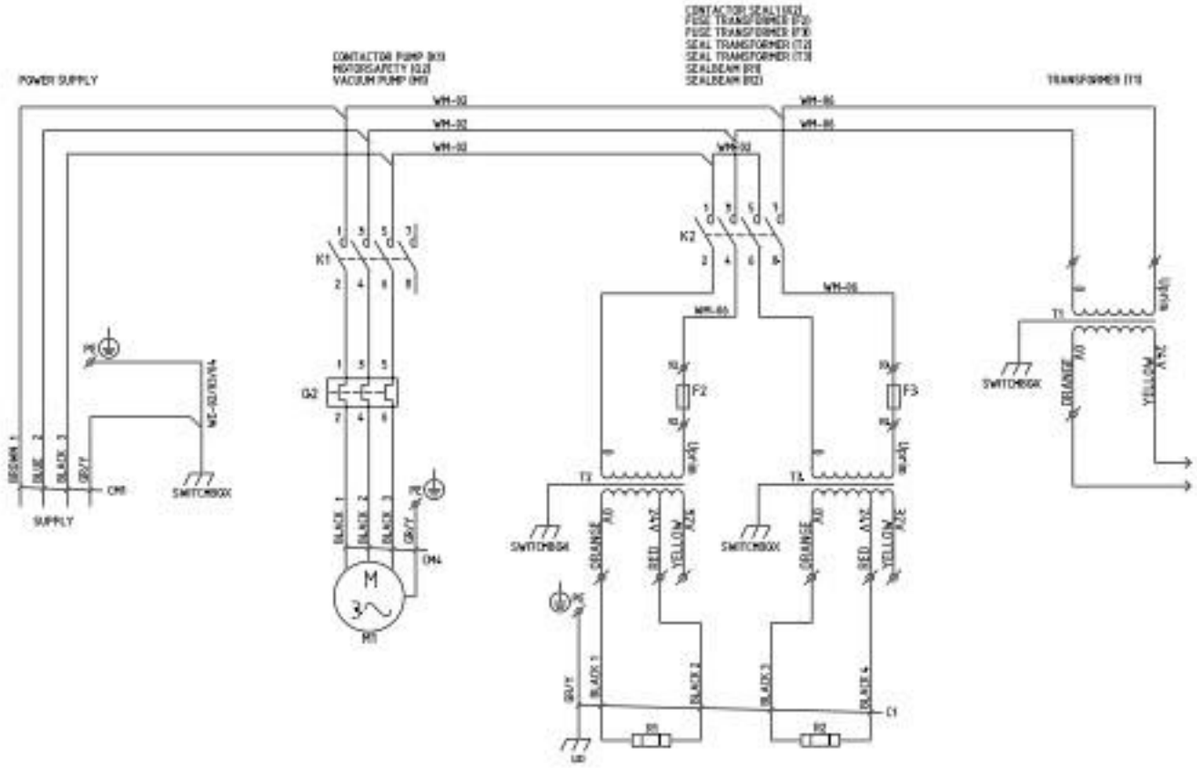
POWER SUPPLY
TRANSFORMER (T1)
SUPPLY
SWITCHBOX
K1
K2
G2
F2
F3
T1
T2
T3
M
M1
C1
C2
C3
C4
C5
C6
D1
D2
BROWN
BLUE
BLACK 1
BLACK 2
BLACK 3
BLACK 4
GREY
ORANGE
RED
YELLOW
WHITE
GREEN
PURPLE
WM-02
WM-06
WZ-02/03/04
WZ-06

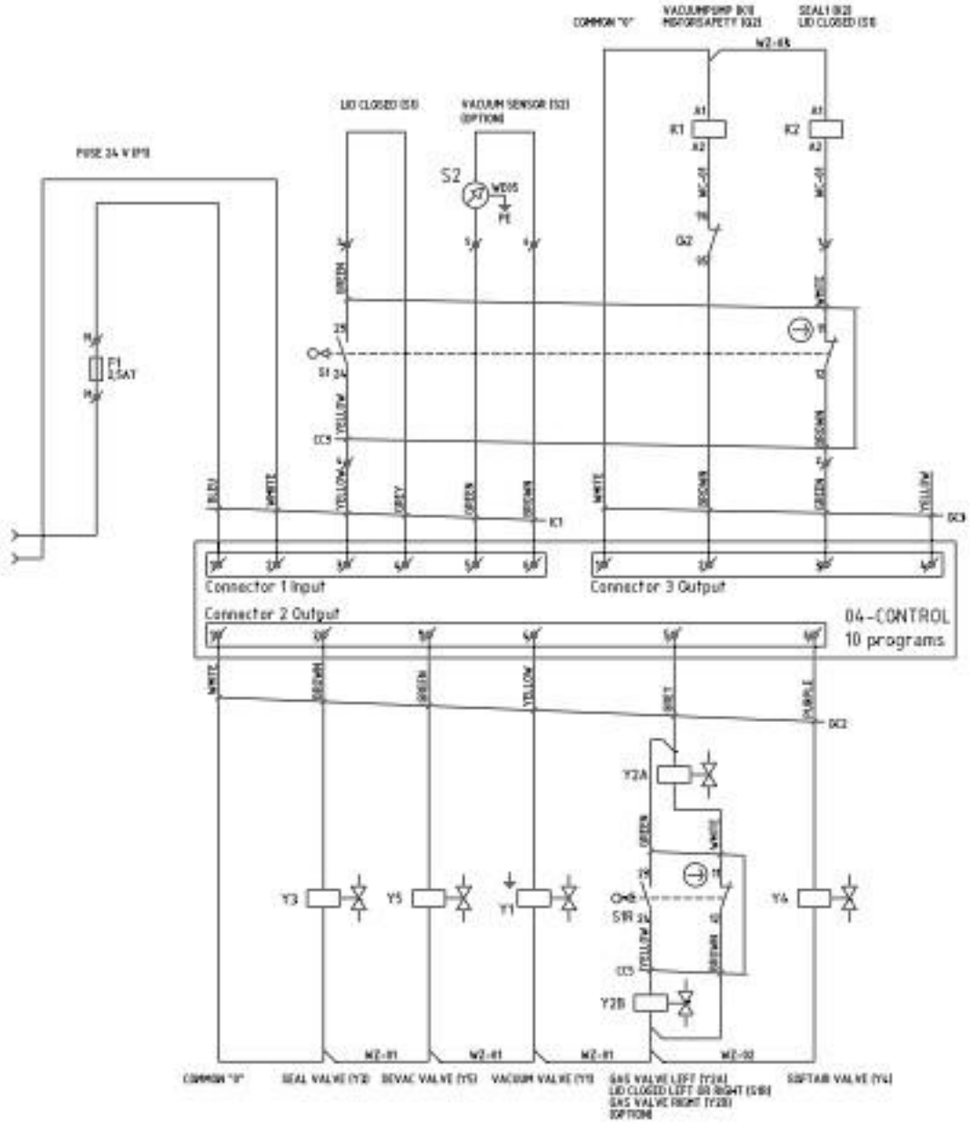
COMMON "0"
VACUUMPUMP (K1)
MOTORSAFETY (G2)
SEAL1 (K2)
LID CLOSED (S1)
VACUUM SENSOR (S2)
(OPTION)
FUSE 24 V (F1)
F1
1,5AT
S2
WD15
PE
K1
K2
G2
S1
S1R
Y2A
Y2B
Y3
Y5
Y1
Y4
WZ-01
WZ-02
Connector 1 Input
Connector 2 Output
Connector 3 Output
04-CONTROL
10 programs
COMMON "0"
SEAL VALVE (Y2)
BEVAC VALVE (Y5)
VACUUM VALVE (Y1)
GAS VALVE LEFT (Y2A)
LID CLOSED LEFT OR RIGHT (S1R)
GAS VALVE RIGHT (Y2B)
(OPTION)
SOFTAIR VALVE (Y4)