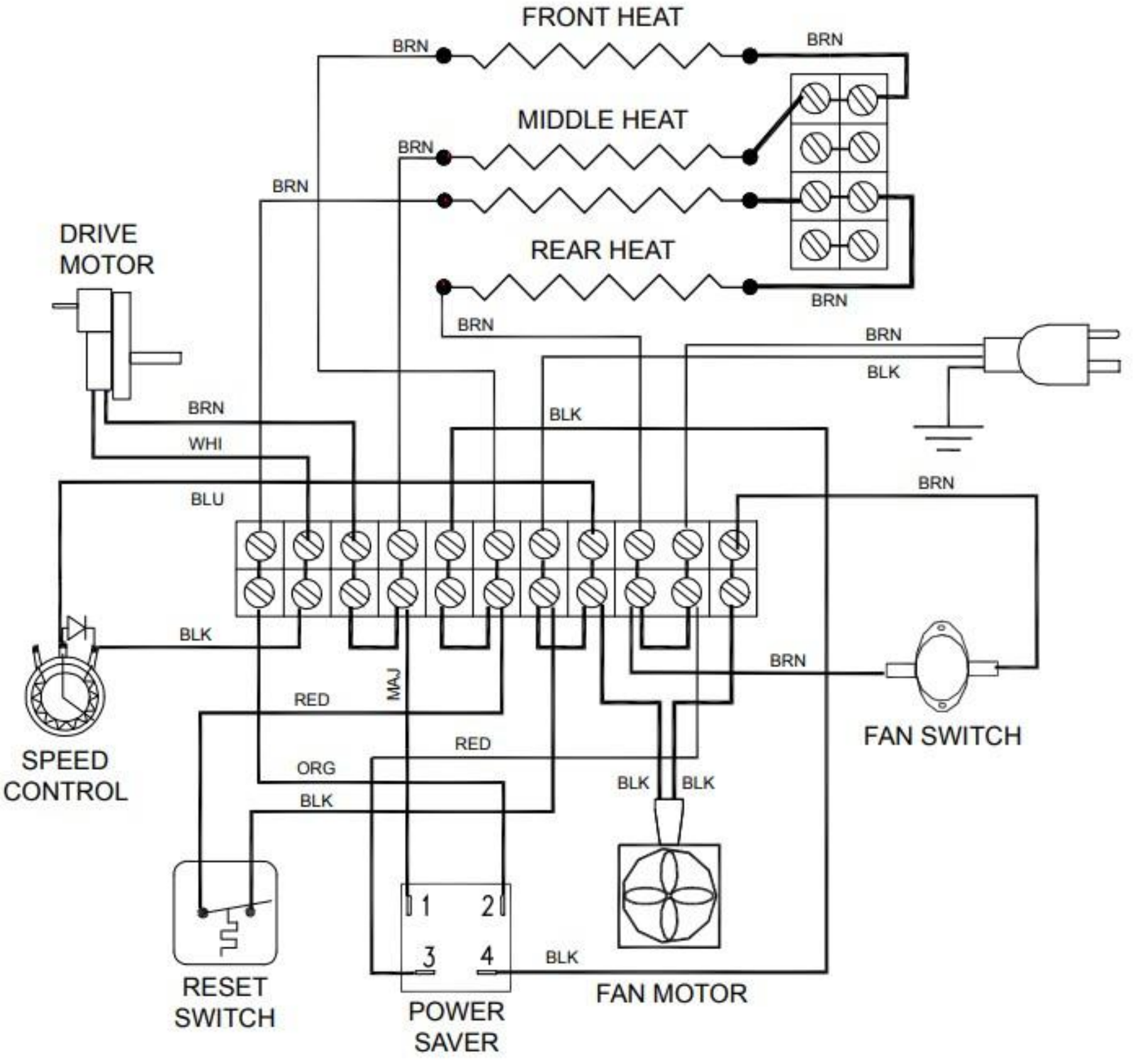
FRONT HEAT
BRN
BRN
MIDDLE HEAT
BRN
BRN
REAR HEAT
BRN
BRN
DRIVE MOTOR
BRN
BLK
BRN
WHI
BLK
BLU
BRN
BLK
BRN
MAJ
RED
FAN SWITCH
SPEED CONTROL
RED
ORG
BLK
BLK
BLK
1
2
3
4
BLK
RESET SWITCH
POWER SAVER
FAN MOTOR

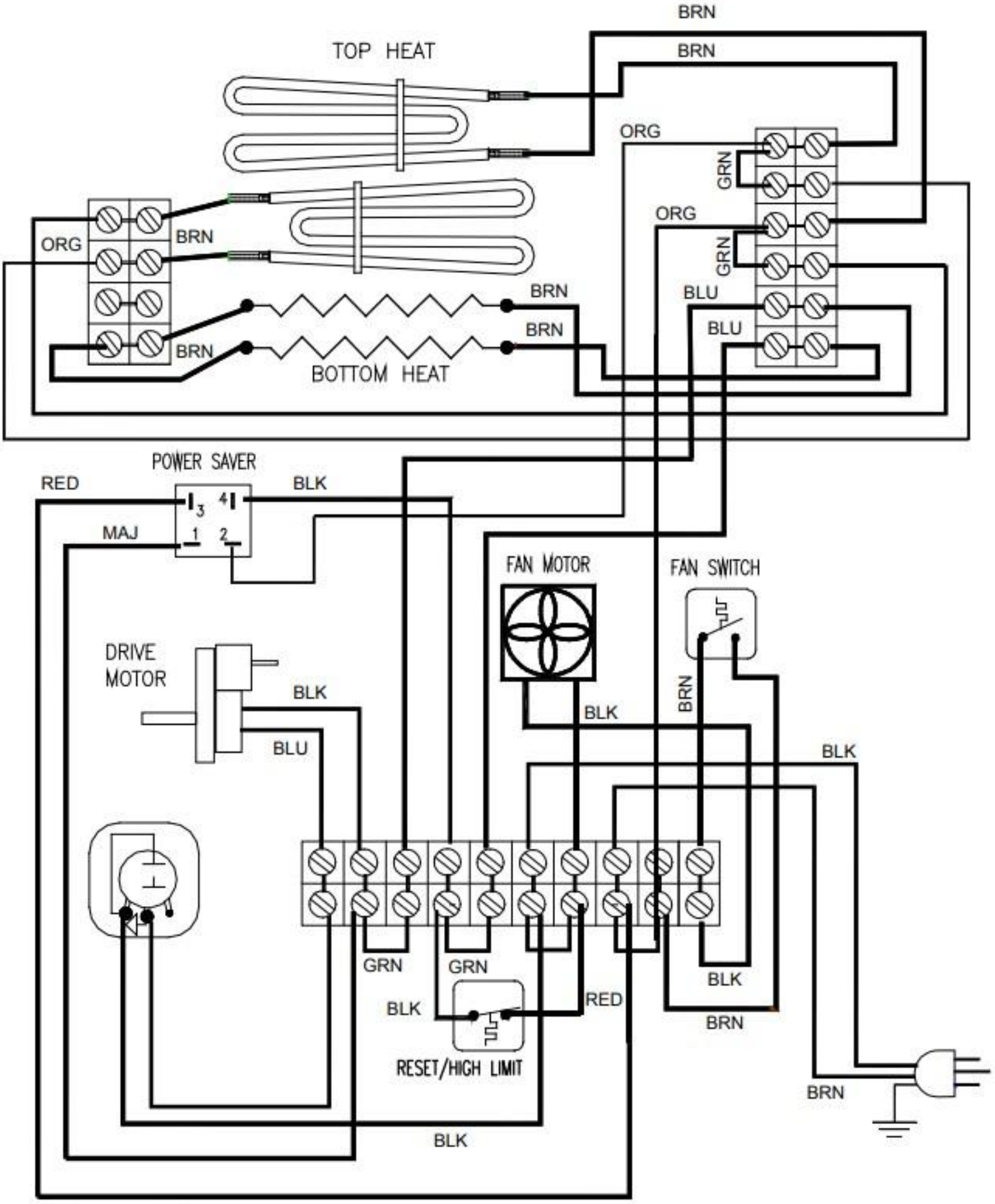
TOP HEAT
BRN
BRN
ORG
GRN
ORG
GRN
ORG
BRN
BRN
BLU
BLU
BRN
BRN
BOTTOM HEAT
POWER SAVER
RED
BLK
MAJ
FAN MOTOR
FAN SWITCH
DRIVE MOTOR
BLK
BLU
BLK
BRN
BLK
GRN
GRN
BLK
RED
BLK
BRN
RESET/HIGH LIMIT
BRN
BLK