STOELTING®
A VOLLRATH® DIVISION

Model E111I-A
OPERATORS MANUAL

Manual No. 513697 Rev.2

This manual provides basic information about the machine. Instructions and suggestions are given covering its operation and care. This manual follows the guidance set forth in the following industry standards: ANSI Z535.6, ASTM F760-93, ASTM F1827-13, FDA Food Code.

The illustrations and specifications in this manual are not binding in detail. We reserve the right to make changes to the machine without notice, and without incurring any obligation to modify or provide new parts for machines built prior to date of change.

DO NOT ATTEMPT to operate the machine until instructions and safety precautions in this manual are read completely and are thoroughly understood. If problems develop or questions arise in connection with installation, operation, or servicing of the machine, contact Stoelting White Glove Service.

STOELTING®
A VOLLRATH® DIVISION

stoeltingfoodservice.com

Stoelting Foodservice Equipment
502 Highway 67
Kiel, WI 53042-1600
U.S.A.

White Glove Service Network
Phone: 888.319.9549

© 2019 Stoelting

A Few Words About Safety

Safety Information

Read and understand the entire manual before operating or maintaining Stoelting equipment.

This manual provides the operator with information for the safe operation and maintenance of Stoelting equipment. As with any machine, there are hazards associated with their operation. For this reason safety is emphasized throughout the manual. To highlight specific safety information, the following safety definitions are provided to assist the reader.

The purpose of safety symbols is to attract your attention to possible dangers. The safety symbols, and their explanations, deserve your careful attention and understanding. The safety warnings do not by themselves eliminate any danger. The instructions or warnings they give are not substitutes for proper accident prevention measures.

If you need to replace a part, use genuine Stoelting parts with the correct part number or an equivalent part. We strongly recommend that you do not use replacement parts of inferior quality.

Safety Alert Symbol:

This symbol Indicates danger, warning or caution. Attention is required in order to avoid serious personal injury. The message that follows the symbol contains important information about safety.

Signal Word:

Signal words are distinctive words used throughout this manual that alert the reader to the existence and relative degree of a hazard.

WARNING

The signal word “WARNING” indicates a potentially hazardous situation, which, if not avoided, may result in death or serious injury.

CAUTION

The signal word “CAUTION” indicates a potentially hazardous situation, which, if not avoided, may result in minor or moderate injury.

NOTICE

The signal word “*NOTICE*” indicates information relating to equipment/property damage. The information is not hazard-related.

NOTE

The signal word “NOTE” indicates additional information relating to the subject, usually a hint or tip, that is not hazard-related and does not involve equipment/property damage.

TABLE OF CONTENTS

Section	Description	Page
1	**Introduction**	
1.1	Description	1
1.2	Specifications	1
2	**Installation Instructions**	
2.1	Safety Precautions	3
2.2	Shipment and Transit	3
2.3	Machine Installation	3
3	**Initial Set-Up and Operation**	
3.1	Operator's Safety Precautions	5
3.2	Operating Controls and Indicators	5
3.3	Emptying the Freezing Cylinder	7
3.4	Disassembly of Parts	7
3.5	Cleaning Disassembled Parts	8
3.6	Cleaning the Machine	8
3.7	Assembling Machine	8
3.8	Sanitizing	9
3.9	Initial Freeze Down and Operation	10
3.10	Normal Freeze Down and Operation	11
3.11	Morning Startup/Freeze Down Procedures	11
3.12	Mix Information	11
4	**Maintenance and Adjustments**	
4.1	Machine Adjustment	13
4.2	Product Consistency Adjustment	13
4.3	Locking the Control Panel	13
4.4	Obtaining Readings and Modifying Settings (Service Personnel Only)	13
4.5	Readings (Service Personnel Only)	15
4.6	Adjustments (Service Personnel Only)	16
4.7	Other Settings (Service Personnel Only)	16
4.8	Drive Belt Tension Adjustment	17
4.9	Condenser Cleaning	18
4.10	Preventative Maintenance	18
4.11	Extended Storage	18
5	**Troubleshooting**	
5.1	Error Codes	19
5.2	Troubleshooting	19
5.3	Troubleshooting - Machine	21
6	**Replacement Parts**	
6.1	Decals and Lubrication	23
6.2	Auger Shaft and Faceplate Parts	24
6.3	Hopper Covers and Trays	25

SECTION 1
INTRODUCTION

1.1 DESCRIPTION

The Stoelting E111I-A counter top machine is gravity fed. It is equipped with fully automatic controls to provide a uniform product. The E111I-A is designed to operate with almost any type of commercial soft serve or non-dairy mixes available, including: ice milk, ice cream, yogurt, and frozen dietary desserts.

This manual is designed to assist qualified service personnel and operators in the installation, operation and maintenance of the Stoelting E111I-A gravity machine.

Figure 1-1 E111I-A

1.2 SPECIFICATIONS

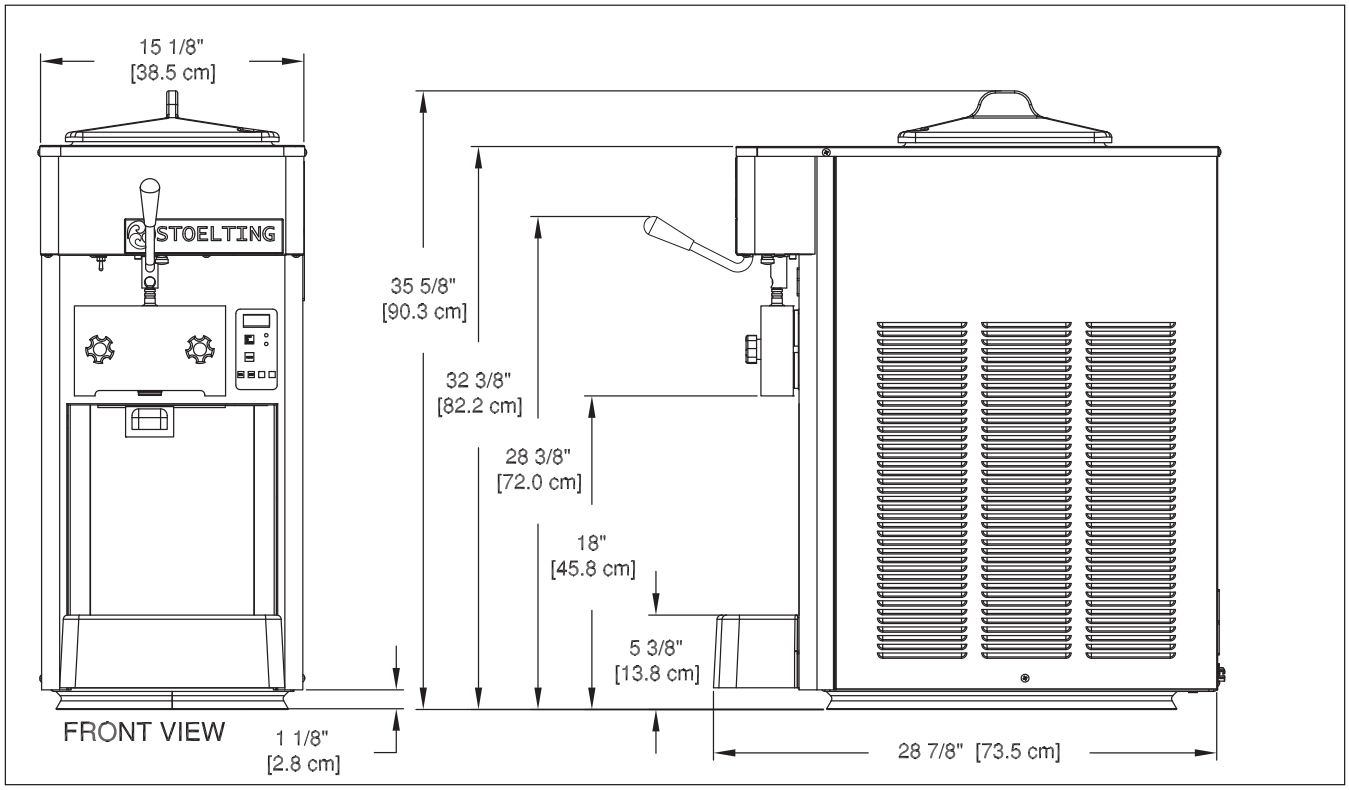

Figure 1-2 Specification

1.2 SPECIFICATIONS (CONTINUED)

	Model E111I-A	
Dimensions	**Machine**	**with crate**
width	15-1/8'' (38,4 cm)	19-1/2'' (49,5 cm)
height	35-5/8'' (90,5 cm)	45-3/4'' (116,2 cm)
depth	28-7/8'' (73,3 cm)	33-1/2'' (85,1 cm)
Weight	224 lbs (101,6 kg)	250 lbs (113,3 kg)
Electrical	**1 Phase, 115 VAC, 60Hz**	
running amps	12.4A	
connection type	NEMA5-20P power cord provided	
International Option	1 Phase, 220-240 VAC, 50Hz	
Compressor	4,240 Btu/hr	
Drive Motor	1/2 hp	
Air Flow	Air cooled units require 3" (7,6 cm) air space on the right side	
Hopper Volume	3.375 gallon (12,78 liters)	
Freezing Cylinder Volume	0.5 gallon (1,89 liters)	

SECTION 2
INSTALLATION INSTRUCTIONS

2.1 SAFETY PRECAUTIONS

Do not attempt to operate the machine until the safety precautions and operating instructions in this manual are read completely and are thoroughly understood.

Take notice of all warning labels on the machine. The labels have been put there to help maintain a safe working environment. The labels have been designed to withstand washing and cleaning. All labels must remain legible for the life of the machine. Labels should be checked periodically to be sure they can be recognized as warning labels.

If danger, warning or caution labels are needed, indicate the part number, type of label, location of label, and quantity required along with your address and mail to:

STOELTING
ATTENTION: Customer Service
502 Hwy. 67
Kiel, Wisconsin 53042

2.2 SHIPMENT AND TRANSIT

The machine has been assembled, operated and inspected at the factory. Upon arrival at the final destination, the entire machine must be checked for any damage which may have occurred during transit.

With the method of packaging used, the machine should arrive in excellent condition. THE CARRIER IS RESPONSIBLE FOR ALL DAMAGE IN TRANSIT, WHETHER VISIBLE OR CONCEALED. Do not pay the freight bill until the machine has been checked for damage. Have the carrier note any visible damage on the freight bill. If concealed damage and/or shortage is found later, advise the carrier within 10 days and request inspection. The customer must place claim for damages and/or shortages in shipment with the carrier. Stoelting, Inc. cannot make any claims against the carrier.

2.3 MACHINE INSTALLATION

WARNING

Installation must be completed by a qualified electrician/refrigeration specialist.

Incorrect installation may cause personal injury, severe damage to the machine and will void factory warranty.

Installation of the machine involves moving the machine close to its permanent location, removing all crating, setting in place, assembling parts, and cleaning.

A. Uncrate the machine.

B. Accurate leveling is necessary for correct drainage of machine barrel and to insure correct overrun.

Figure 2-1 Space and Ventilation Requirements

Place a bubble level on top of the machine at each corner to check for level condition. If adjustment is necessary, level the machine by turning the bottom part of each leg in or out.

C. The machine has a base gasket that must be installed. Separate the gasket and install it with the seam to the back. Make sure the angled side of the gasket is facing up.

D. Correct ventilation is required. The right side of the machine is the air intake and left side is the discharge. Both sides must have 3” clearance.

CAUTION

Failure to provide adequate ventilation will void warranty.

E. Place the Main Freezer Power Off/On switch in the OFF position.

F. Connect the power cord to the proper power supply. The machine has a NEMA5-20P. Check the nameplate on your machine for proper supply. The unit must be connected to a properly grounded receptacle. The electrical cord furnished as part of the machine has a three prong grounding type plug. The use of an extension cord is not recommended, if necessary use one with a size 12 gauge or heavier with ground wire. Do not use an adapter to circumvent the grounding requirement.

WARNING

Do not alter or deform electrical plug in any way. Altering the plug to fit into an outlet of different configuration may cause fire, risk of electrical shock, product damage and will void warranty.

SECTION 3
INITIAL SETUP AND OPERATION

3.1 OPERATOR'S SAFETY PRECAUTIONS

SAFE OPERATION IS NO ACCIDENT; observe these rules:

A. Know the machine. Read and understand the Operating Instructions.

B. Notice all warning labels on the machine.

C. Wear proper clothing. Avoid loose fitting garments, and remove watches, rings or jewelry that could cause a serious accident.

D. Maintain a clean work area. Avoid accidents by cleaning up the area and keeping it clean.

E. Stay alert at all times. Know which switch, push button or control you are about to use and what effect it is going to have.

F. Disconnect electrical cord for maintenance. Never attempt to repair or perform maintenance on the machine until the main electrical power has been disconnected.

G. Do not operate under unsafe operating conditions. Never operate the machine if unusual or excessive noise or vibration occurs.

3.2 OPERATING CONTROLS AND INDICATORS

Before operating the machine, it is required that the operator know the function of each operating control. Refer to Figure 3-1 for the location of the operating controls on the machine.

⚠ WARNING

High voltage will shock, burn or cause death. The OFF-ON switch must be placed in the OFF position prior to disassembling for cleaning or servicing. Do not operate machine with cabinet panels removed.

A. MAIN FREEZER POWER OFF-ON SWITCH

The Main Freezer Power OFF-ON switch is a two position toggle switch used to supply power to the control circuit. When the switch is in the OFF position, power is not supplied to the control board or refrigeration system. When the switch is in the ON position, the machine operates in the freezing mode or cleaning mode.

Figure 3-1 E111I-A Controls

C. PUSH TO FREEZE BUTTON

Pressing the PUSH TO FREEZE button initiates "Serve Mode".

NOTE

After the drive motor starts, there is a 3 second delay before the compressor starts.

D. LEDS

The membrane switch features two lights; a green LED and an amber LED.

Green LED:

- Flashes when product nears consistency
- Lit during serve mode

Amber LED:

- Lit during all other modes

In the event of an error or when the freezing cylinder is off, both LEDs alternatively flash.

NOTE

If the machine shuts off and alternating green and amber lights are flashing, the machine is in an error condition. If the LCD displays an error, turn the Main Freezer Power OFF-ON switch to the OFF position, correct the problem (Refer to Troubleshooting in Section 4) and turn the machine back on.

E. CLEAN BUTTON

The CLEAN button initiates "Clean Mode". The CLEAN button stops all refrigeration and starts the auger rotation. A CLEAN message displays on the screen and a 5 minute timer begins. To exit the CLEAN mode, press the CLEAN button again. If the machine is left in CLEAN for more than 20 minutes, it goes into an error to prevent damage to the freezing cylinder. When this error occurs, refrigeration starts to prevent mix spoilage. To reset, place the Main Freezer Power OFF-ON switch in the OFF position and back in the ON position.

F. MIX LOW LIGHT INDICATOR

The MIX LOW message appears on the display to alert the operator to a low mix condition. The message displays when there is approximately one gallon of mix left in the hopper. When the MIX LOW message is displayed, refill hopper immediately.

NOTE

Failure to refill hopper immediately may result in operational problems.

G. DISPENSE RATE ADJUSTOR

The dispense rate adjuster limits the opening of the spigot. To adjust product dispense rate, turn the adjusting knob clockwise for slower flow and counterclockwise for faster flow. It takes at least five complete turns of the adjusting knob to make a noticeable difference in the dispense rate.

I. MENU NAVIGATION BUTTONS

The Menu Navigation Buttons allow the user to display information regarding the machine's status of operation as well as adjust product consistency.

Selection Button (SEL) The SEL button is not functional in the normal operation mode. This button is only used by service technicians for machine calibration.

Set Button (SET) Pressing this button saves a change made to the product consistency setting. Refer to Section 4.2 for consistency adjustment procedures.

Left Arrow Button (⇐) Pressing any button on the control panel automatically illuminates the display. The backlight turns off several seconds after use. To keep the display constantly lit, press and hold the left (⇐) button for five seconds. The backlight function can be reset to normal operation in the same manner.

Up Arrow Button (⇑) Pressing this button changes the value of the product consistency. Refer to Section 4.2 for consistency adjustment procedures.

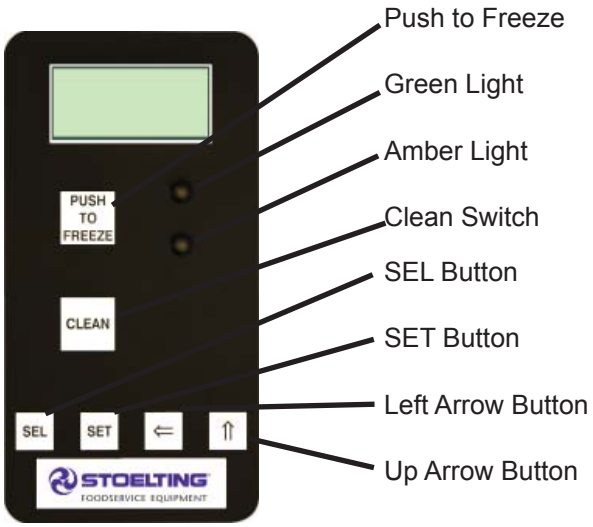

Figure 3-2 IntelliTec™ Control

3.3 EMPTYING THE FREEZING CYLINDER

If the machine is empty, go to Section 3.4.

A. Remove the hopper cover. Remove the mix inlet regulator from the hopper by pulling it straight up.

B. Press the CLEAN button. After about 5 minutes, open the spigot to drain the mix.

C. Press the CLEAN button to stop the auger.

D. Fill the hopper with 2 gallons of cool tap water and press the CLEAN button. Let the auger rotate for at least 30 seconds.

E. While the auger is rotating, scrub the hopper with a clean brush.

F. Drain the water out of the machine.

NOTE

If the water does not drain clear, repeat steps D through F.

G. Press the CLEAN button to stop the auger.

H. Optional: Fill the hopper with about 2 gallons of detergent solution (Palmolive or equivalent) and follow steps B through F above.

NOTE

Running the detergent solution through the machine makes cleaning parts easier after disassembly.

3.4 DISASSEMBLY OF PARTS

Before using the machine for the first time, complete machine disassembly, cleaning and sanitizing procedures need to be followed. Routine cleaning intervals and procedures must comply with local and state health codes. Inspection for worn or broken parts should be made each time the machine is disassembled. Replace any worn or broken parts to ensure safety to both the operator and the customer and to maintain good machine performance and a quality product. Check the wear line on the auger flights on a regular basis (Fig. 3-3) and replace as needed. Frequency of cleaning must comply with the local health regulations.

Figure 3-3 Auger Flight Wear

To disassemble the machine, refer to the following steps:

A. DISASSEMBLY OF FRONT DOOR

1. Turn the MAIN POWER switch off.
2. Remove the rosette cap from the front door.
3. Remove the knobs on the front door and remove the door by pulling it off the studs.
4. Push the spigot body through the bottom of the front door and remove.
5. Remove all o-rings from parts by first wiping off the lubricant using a clean towel. Then squeeze the o-ring upward to form a loop (Fig. 3-4). Roll out of the o-ring groove.

CAUTION
Do not use any type of sharp object to remove the o-rings.

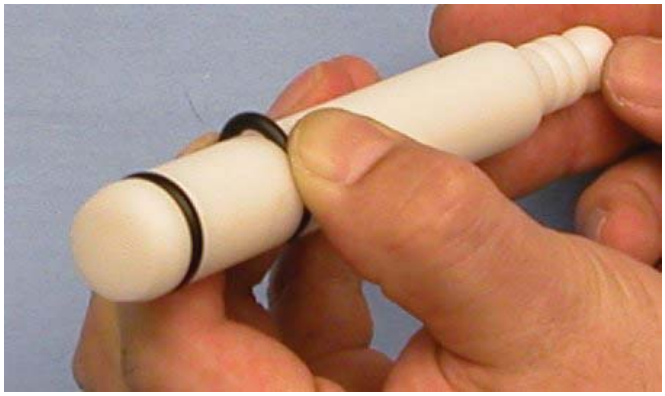

Figure 3-4 Removing O-Ring

B. DISASSEMBLY OF AUGER

1. Remove the front auger support and bushing.
2. Remove the auger assembly from the machine. Pull the auger out of the machine barrel slowly. As the auger is being pulled out, carefully remove each of the plastic flights with springs.
3. Keep the rear of the auger shaft tipped up once it is clear of the machine to avoid dropping rear seal.
4. Remove the rear seal.
5. Wipe socket lubricant from the drive end (rear) of the auger with a cloth or paper towel.
6. Unscrew the springs from the auger flights.

3.5 CLEANING DISASSEMBLED PARTS

Disassembled parts require complete cleaning, sanitizing and air drying before assembling. Local and state health codes dictate the procedure required. Some state health codes require a four sink process (pre-wash, wash, rinse, sanitize, air dry), while others require a three sink process (without the pre-wash step). The following procedures are a general guideline only. Consult your local and state health codes for the procedures required in your location.

A. Disassemble all parts. (Refer to Section 3.4 for the disassembly of machine parts.)

B. Place all parts in 90° to 110°F (32°C to 43°C) mild detergent water and wash thoroughly. Use the brushes that shipped with the machine to clan all holes in the front door, flights, mix pickup assembly, etc.

C. Rinse all parts with clean 90° to 110°F (32°C to 43°C) water.

D. Place all parts in sanitizing solution for at least 1 minute, then remove and let air dry completely before assembling in machine.

3.6 CLEANING THE MACHINE

The exterior should be kept clean at all times to preserve the luster of the stainless steel. A high grade of stainless steel has been used on the machine to ease cleanup. To remove spilled or dried mix, wash the exterior with 90° to 110°F (32°C to 43°C) mild detergent water and wipe dry.

Do not use highly abrasive materials, as they mar the finish. Use a soft cloth or sponge to apply the solution. For best results, wipe with the grain of the steel.

A. Clean the rear seal surface from inside of the freezing cylinder.

B. Using sanitizing solution and the large barrel brush provided, sanitize the freezing cylinder by dipping the brush in the sanitizing solution and brushing the inside of the freezing cylinder.

C. Wrap the brush in a clean sanitized cloth and thoroughly dry the freezing cylinder.

D. Remove the drip tray from the front panel. Clean and replace the drip tray.

3.7 ASSEMBLING MACHINE

To assemble the machine parts, refer to the following steps:

NOTE

Petrol-Gel sanitary lubricant, Total Blend sanitary lubricant, or equivalent must be used when lubrication of parts is specified.

Total Blend can be used in place of two products. It is used to lubricate parts and also used in place of spline lubricant. Do not use more than one packet of Total Blend per freezing cylinder.

NOTE

The United States Department of Agriculture and the Food and Drug Administration require that lubricants used on food processing equipment be certified for this use. Use lubricants only in accordance with the manufacturer's instructions.

A. Install the rear seal o-ring. Lubricate the outside of the rear seal o-ring with a generous amount of sanitary lubricant.

B. Lubricate the inside metal surface of the rear seal (Fig. 3-5) and install it onto the auger shaft. DO NOT lubricate the outside of the rear seal.

C. Lubricate the hex end of the auger with a small amount of spline lubricant or Total Blend lubricant. A small container of spline lubricant or Total Blend packets were shipped with the machine.

NOTE

Total Blend lubricant can be used in place of spline lubricant. DO NOT use Petrol-Gel on the drive end of the auger.

Figure 3-5 Lubricate Rear Seal

D. Screw the springs onto the studs in plastic flights. The springs must be screwed into the flights completely to provide proper compression.

E. Install the two plastic flights onto rear of the auger and insert part way into freezing cylinder.

F. Install the remaining plastic flights, push the auger into the machine barrel and rotate slowly until the auger engages the drive shaft.

G. Apply a thin layer of sanitary lubricant to the inside and outside of the auger support bushing. Install the bushing onto the auger support and install the auger support into the front of the auger. Rotate the auger support so that one leg of the support points straight up.

H. Install the o-rings onto the spigot body and apply a thin layer of sanitary lubricant to the o-rings. Install the spigot body through the bottom of the front door.

I. Fit the front door o-ring into the groove on the rear of the front door.

J. Place the front door assembly on the mounting studs and the push front door against the machine carefully.

NOTE

Make sure the pins of the front door do not touch the legs of the auger support.

K. Secure the front door to the machine by placing the knobs on the studs and tightening until finger tight. Tighten in a crisscross pattern. Do not overtighten. Proper o-ring seal can be observed through the transparent front door.

3.8 SANITIZING

Sanitizing must be done after the machine is clean and just before the machine is filled with mix. Sanitizing the night before is not effective. However, you should always clean the machine and parts after using it.

NOTE

The United States Department of Agriculture and the Food and Drug Administration require that all cleaning and sanitizing solutions used with food processing equipment be certified for this use.

When sanitizing the machine, refer to local sanitary regulations for applicable codes and recommended sanitizing products and procedures. The frequency of sanitizing must comply with local health regulations. Mix sanitizer according to manufacturer's instructions to provide a 100 parts per million strength solution. Mix sanitizer in quantities of no less than 2 gallons of 90°F to 110°F (32°C to 43°C) water. Allow sanitizer to contact the surfaces to be sanitized for 5 minutes. Any sanitizer must be used only in accordance with the manufacturer's instructions.

CAUTION

Risk of Product Damage

Avoid extended contact of sanitizer with machine parts. Stainless steel parts may become corroded with prolonged contact to sanitizer.

In general, sanitizing may be conducted as follows:

A. Prepare 2 gallons of Stera-Sheen sanitizing solution following the manufacturer's instructions.

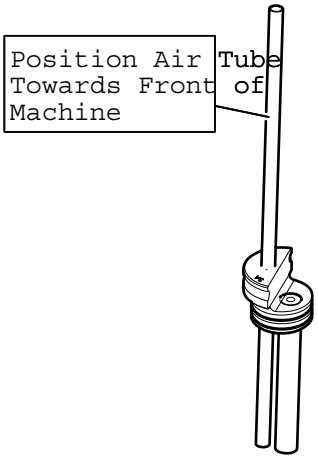

Figure 3-6 Mix Inlet Regulator

B. Install the mix inlet regulator into the hopper with the air tube towards the front of the machine.

NOTE

Do not twist the mix inlet regulator when installing.

C. Pour the sanitizing solution into the hopper.

D. Turn the MAIN POWER switch on.

E. Press the CLEAN button.

F. Check for leaks.

1. Check for leaks at the front door seal.
2. Check the drain tray located under the front door for leaks coming from the rear of the rear auger seal.

G. Use a sanitized soft bristle brush dipped in sanitizing solution to clean the hopper sides, the mix inlet regulator, and the underside of the hopper cover.

H. After five minutes, open the spigot to drain the sanitizing solution.

I. Press the CLEAN button to stop the auger. Allow the freezing cylinder to drain completely.

The machine is now sanitized and ready for adding mix. For first time use, continue to Section 3.9. For normal operation, continue to Section 3.10.

3.9 INITIAL FREEZE DOWN AND OPERATION

Every Stoelting soft serve machine needs to be set on site.

The following adjustment provides optimal product consistency while prolonging product life.

NOTE

The machine is designed for correct operation in ambient temperatures between 50°F and 110°F. Temperatures out of that range may cause refrigeration problems and product quality issues.

A. ADDING MIX

1. Sanitize the machine immediately before use.
2. Fill the hopper with at least 2.5 gallons of mix.
3. Place a container under the spigot and open the spigot to allow the mix to flush out about 8 ounces (0.23 liters) of sanitizing solution and liquid mix. Close the spigot.

B. PREPARING THE INTELLITEC™ CONTROL

1. On the IntelliTec™ control, press and hold the SEL button for 8 seconds. While still holding the SEL button, press the up arrow (⇑) button. The LCD reads “DISPLAY”.
2. Press the left arrow (⇐) button once. The display reads “BASIC”.
3. Press the up arrow (⇑) button once. The display reads “CutOut amps”.
4. Press the SET button. A cursor starts blinking under the far right digit.
5. Change the value to 8.0. To change:
   a. Press the left arrow (⇐) button to move the cursor.
   b. Press the up arrow (⇑) button to increase the digit to 8.0.
   c. Press SET to save this value.
6. The LCD reads “CutOut Set -- OK”.
7. Press the SEL button. The LCD reads “CutOut amps 8.0”.
8. Press the SEL button twice. The LCD reads “DISPLAY”.
9. Press the up arrow (⇑) button to navigate to the “°F” and “amps” readings.

C. INITIAL FREEZE DOWN

1. Press the PUSH TO FREEZE button.

NOTE

After the drive motor starts, there is a 3-second delay before the compressor starts.

2. As the product freezes, the “amps” value on the display increases. When it reaches 2.8A, open the spigot, take a 6-8 ounce sample and measure the temperature. For most soft serve mixes, the desired temperature is between 19.0°F and 19.5°F.
3. Draw samples at every increase of 0.2A until reaching the desired consistency and temperature.

NOTE

Show the sample to the customer and make sure it meets their required consistency and temperature.

4. Record the “amps” value.
5. Place the Main Freezer Power switch in the OFF position to stop the freezing cycle.

D. ADJUSTING THE INTELLITEC™ CONTROL

. Place the Main Freezer Power switch in the ON position.

. Press and hold the SEL button for 8 seconds. While still holding the SEL button, press the up arrow (⇑) button. The LCD reads “DISPLAY”.

. Press the left arrow (⇐) button once. The display reads “BASIC”.

. Press the up arrow (⇑) button once. The display reads “CutOut amps”.

. Change the value to the recorded value by first pressing the SET button.
   a. Press the left arrow (⇐) button to move the cursor.
   b. Press the up arrow (⇑) button to change the digits.
   c. Press SET to save this value.

. The LCD reads “CutOut Set -- OK”.

. Press the SEL button. The LCD reads “CutOut amps” along with the programmed value from the previous step.

. Press the SEL button three times. The LCD reads “EXITMENU”.

. Press the up arrow (⇑) button to exit the menu.

Adjustment to the control is completed.

E. MAKING PRODUCT

. Press the PUSH TO FREEZE button.

. When the product is at 75% consistency, the display reads “SERVE”. Open the spigot to dispense product.

3.10 NORMAL FREEZE DOWN AND OPERATION

The following section contains the recommended operating procedures for the safe operation of the machine.

A. Sanitize immediately before use.

B. Make sure the Main Freezer Power switch is OFF.

C. Fill the hopper with at least 2.5 gallons of mix.

D. Place a container under the spigot and open the spigot to allow the mix to flush out about 8 ounces (0.23 liters) of sanitizing solution and liquid mix.

E. Place the Main Freezer Power switch in the ON position.

F. Press the PUSH TO FREEZE button.

NOTE

After the drive motor starts, there is a 3-second delay before the compressor starts.

G. When the product is at 75% consistency, the display reads "SERVE" (Fig. 3-7). Open the spigot to dispense product.

H. The machine dispenses product at a reasonable draw rate. If the machine is overdrawn, the result is a soft product or a product that does not dispense at all. If this occurs, allow the machine to run for approximately 30 seconds before dispensing more product. A dispense rate adjustor is located under the header panel, to the immediate right of the spigot handle. Turning the knob clockwise decreases the dispense rate.

I. Do not operate the machine when the MIX LOW message is displayed. Refill the mix container immediately.

NOTE

The machine has a standby and sleep mode. After a preset number of freezing cycles, it enters the standby mode (followed by sleep mode) and remain there until someone draws product or presses the PUSH TO FREEZE button. In the sleep mode, the machine keeps the product below 41°F (4.4°C). Sleep modes do not take the place of cleaning and sanitizing. Federal, State, and local regulatory agencies determine frequency of cleaning and sanitizing.

3.11 MORNING STARTUP/FREEZE DOWN PROCEDURES

Prime the freezing cylinder every morning prior to pressing the Push to Freeze button. After being in sleep mode overnight, priming ensures proper overrun from the first freezing cycle of the day.

A. Turn the freezing cylinder off.

B. Place a clean and sanitized container under the spigot opening.

Figure 3-7 During Freezing Cycle

C. Open the spigot and drain about 3/4 of the mix out of the freezing cylinder. If visible, drain mix to the lower spigot o-ring. This equals about 1.5 quarts.

NOTE

Keep the mix inlet regulator in place when draining the mix

D. Pour the mix into the hopper.

NOTE

Determine if the state and local health codes consider this "rerun". If specific procedures are required, follow them.

E. Allow mix to fill the freezing cylinder.

F. Turn the freezing cylinder on and press the Push to Freeze button.

3.12 MIX INFORMATION

Mix can vary considerably from one manufacturer to another. Differences in the amount of butterfat content and quantity and quality of other ingredients have a direct bearing on the finished frozen product. A change in machine performance that cannot be explained by a technical problem may be related to the mix.

Proper product serving temperature varies from one manufacturer's mix to another. Mixes should provide a satisfactory product in the 17°F to 24°F range. Diet and low-carb mixes typically freeze to proper consistency at higher temperatures.

When checking the temperature, stir the thermometer in the frozen product to get an accurate reading.

Old mix, or mix that has been stored at too high a temperature, can result in a finished product that is unsatisfactory.

SECTION 4
MAINTENANCE AND ADJUSTMENTS

4.1 MACHINE ADJUSTMENT

This section is intended to provide maintenance personnel with a general understanding of the machine adjustments. It is recommended that any adjustments in this section be made by a qualified person.

4.2 PRODUCT CONSISTENCY ADJUSTMENT

The operator can adjust product consistency by modifying the Fine Adjustment setting on the membrane switch. This is the only adjustment that can be made by the operator without using a pass code key sequence. Product consistency fine adjustment allows a 0.4 amp maximum adjustment to the drive motor amp draw cutout. Increasing this setting increases the drive motor amperage cutout and increases product consistency. Follow the instructions below to make fine adjustments to product consistency.

A. Place the Main Freezer Power switch in the ON position.

B. Press the SET button on the Control Panel once. Fine Adj appears on the LCD screen.

C. Press the up arrow button (⇑) until the desired consistency setting is displayed. The higher the number, the firmer the product consistency. The control may be set from 1 to 9. The value increases by 1 each time the up arrow button is pressed. After the value reaches 9, numbering restarts at 0. The 0 setting cannot be set.

D. Press the SET button once to save the setting and return to the current mode display.

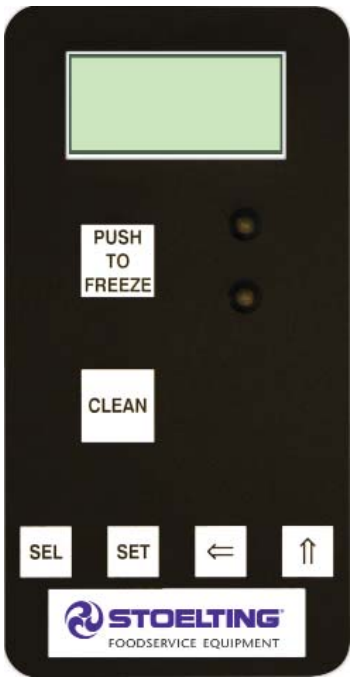

Figure 4-1 Membrane Switch

4.3 LOCKING THE CONTROL PANEL

The IntelliTec control has a tamper proof mode to prevent unauthorized use. When set, all buttons on the control panel are disabled. Follow the instructions below to lock the control panel

A. Press and hold the PUSH TO FREEZE button for at least 5 seconds.

B. While still holding the PUSH TO FREEZE button, press the CLEAN button once.

C. Release both buttons. An asterisk (*) appears on the bottom line of the display, indicating that the control is in the lock out mode.

NOTE:

Repeat steps A, B, and C to unlock the control panel.

4.4 OBTAINING READINGS AND MODIFYING SETTINGS (SERVICE PERSONNEL ONLY)

Readings and settings on the IntelliTec control are accessed through the IntelliTec Control Menu Settings (Refer to Figure 4-2). Locating machine readings and system function settings are completed using the up arrow (⇑) and left arrow (⇐) buttons on the membrane switch. A printed IntelliTec Menu Settings sheet is located in the information pouch behind the header panel.

IntelliTec Control Readings

To obtain machine readings, locate the value on the machine's menu settings sheet and follow the steps below.

A. Press and hold SEL button for 8 seconds. While still holding the SEL button, press the up arrow button (⇑). The LCD Screen reads DISPLAY.

B. Release both buttons.

C. Press the up arrow button (⇑) to navigate to the correct reading under DISPLAY or press the left arrow (⇐) button to navigate to the ERRCODES menu.

D. Press the up arrow (⇑) and left arrow (⇐) buttons to navigate through the rest of the readings as needed.

E. When all readings have been obtained, press the up arrow button (⇑) from ExitMenu to return to the current mode display.

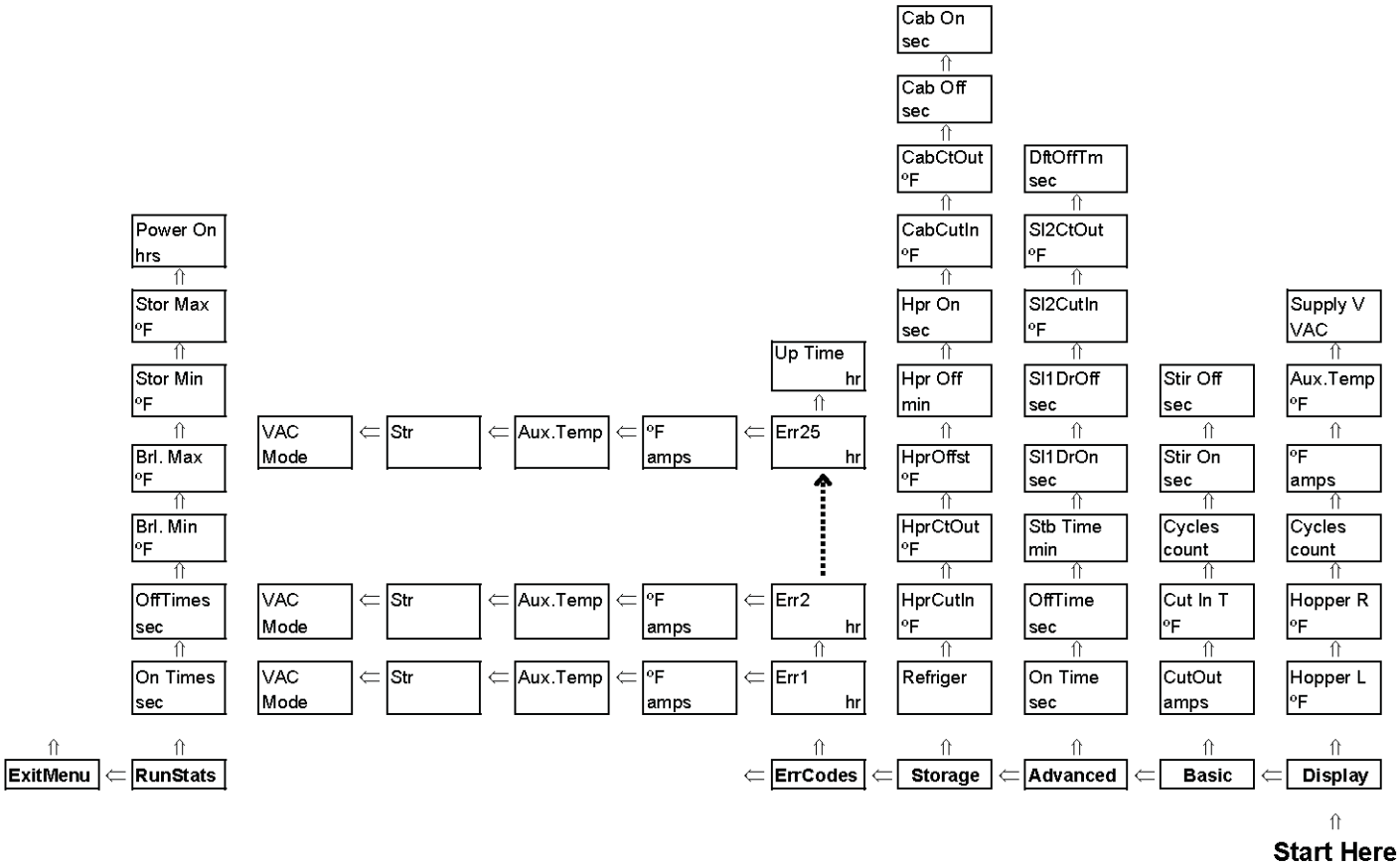

Figure 4-2 IntelliTec Control Menu Settings

Modifying Control Settings

To change the value of a system function, locate the function on the IntelliTec Settings Menu and follow the steps below.

IMPORTANT:

Before making changes to any settings, record the original values. If the setting changes do not achieve desired results, revert settings to their original values.

A. Press and hold SEL button for 8 seconds. While still holding the SEL button, press the up arrow button (⇑). The LCD Screen reads DISPLAY.

B. Release both buttons.

C. Press the left arrow button (⇐) to get to the correct menu (Basic, Advanced, or Storage).

D. Press the up arrow button (⇑) to navigate to the value that needs to be changed.

E. Press SET button to enter edit mode.

F. Press the up arrow button (⇑) to change setting.

G. Press SET button to save the setting and exit the edit mode.

H. Press the up arrow (⇑) and left arrow (⇐) buttons to navigate through the rest of the settings as needed.

I. When all changes have been completed, press the up arrow button (⇑) from ExitMenu to return to the current mode display.

4.5 READINGS (SERVICE PERSONNEL ONLY)

The IntelliTec control continuously monitors and records temperatures, voltages, amps, and error code details. Each of these readings are beneficial to service personnel when troubleshooting.

DISPLAY READINGS

Following are the readings available under the DISPLAY menu:

Hopper (°F)

The temperature of the hopper is constantly monitored by the IntelliTec control.

Cycles (count)

This reading counts down the number of cycles in the current “Serve Mode”. The starting value is dependant upon the Cycles setting on the IntelliTec control.

°F and amps

The suction line temperature on the freezing cylinder and the drive motor amps are available on the same screen to assist with setup and troubleshooting.

Aux. Temp (°F)

This reading provides the ambient temperature around the IntelliTec control.

Supply V (VAC)

A calculated input voltage is recorded.

ERROR CODE READINGS

The following details are recorded under the ERRCODES menu for each of the last 25 error codes received:

Err1 (hours)

A numerical count of the last 25 error codes is recorded. When the 26th error has occurred the earliest error code is erased. A timer also begins when an error occurs. The timer records the number of hours since the error occurred. If power to the machine is interrupted, the timer stops until power has been restored.

°F and amps

The suction gas temperature on the freezing cylinder and the drive motor amps are recorded at the time of the error.

Aux. Temp (°F)

Ambient temperature of the IntelliTec control is recorded at the time of the error.

Str (°F)

The storage temperature is recorded at the time of the error.

VAC and Mode

A calculated input voltage and mode at which the error occurred are recorded. Following are descriptions of each mode:

Mode	Description
0	Start of freezing cycle
1	Compressor and drive motor on
2	Stir Cycle
3	Compressor off
4	“Standby Mode”
5	“Sleep 1 Mode”
6	“Sleep 2 Mode”
7	“Clean Mode”
8	Startup
9	Storage only refrigeration
10	Freezing cycle is shut down
11	Door safety switch triggered
12	High pressure cutout

Up Time (hours)

This value is a record of the total time the machine has been in service. If power is interrupted, the timer stops until power is restored. This timer does not reset.

RUN STATISTICS

In addition to dynamic readings and recorded error code details, the IntelliTec control records rolling averages of run statistics. Following are the readings available under the RUNSTATS menu:

On Times (sec)

The control records the time of each freezing cycle and provides a rolling average.

Off Times (sec)

The control records the time between freezing cycles and provides a rolling average.

Brl. Min (°F)

The lowest average barrel temperature is recorded.

Brl. Max (°F)

The highest average barrel temperature is recorded.

Stor Min (°F)

The lowest average hopper temperature is recorded.

Stor Max (°F)

The highest average hopper temperature is recorded.

Power On (hrs)

This value is a record of the time the machine has been in service. If power is interrupted, the timer resets.

4.6 ADJUSTMENTS (SERVICE PERSONNEL ONLY)

The following adjustments directly affect product consistency and length of time in “Serve Mode”. The default settings have been created using a 5% milkfat soft serve mix and provide optimal product consistency while prolonging product life.

CutOut (amps)

It is recommended to change the CutOut value at initial startup and when changing mix types. Adjustments to this setting directly affect the length of the freezing cycle which changes product consistency. To properly set the CutOut value, refer to Section 3.

Cut In T (°F)

After the consistency value has been determined, the Cut In T value can be adjusted. The Cut In T is the temperature of the refrigerant gas in the evaporator. Changing this setting changes the temperature at which the freezing cycle starts. This value along with the CutOut value determines the range of temperatures (or “temperature window”) of the product. Decreasing the temperature decreases the temperature window and, under normal use, increases the amount of freezing cycles. This creates a greater chance of product breakdown by stirring the product often. Increasing the Cut In T increases the temperature window which decreases freezing cycles and increases the chance of heat shock within the product.

Cycles (count)

This setting determines the number of freezing cycles during “Serve Mode”. Increasing the value increases the total time in “Serve Mode”. Factory default is 16 cycles. This results in “Serve Mode” lasting about 2 to 2-1/2 hours without the PUSH TO FREEZE button being pressed or a spigot handle being pulled. If the PUSH TO FREEZE button is pressed or the spigot handle is pulled at any time during “Serve Mode”, the Cycles count resets.

4.7 OTHER SETTINGS (SERVICE PERSONNEL ONLY)

Changing any setting on the IntelliTec control alters machine operation and affect the product temperature, consistency, or life. Refer to the IntelliTec Control System Settings sheet located in the information pouch behind the header panel of the machine. If any of the following settings on the IntelliTec control differ from the System Settings sheet, it is recommended to revert those settings to factory defaults.

Stir On (sec)

Adjustments to this setting affect the amount of time the auger rotates in the stir cycle. The stir cycle occurs in “Serve Mode”, “Standby Mode”, and “Sleep 2 Mode”.

Stir Off (sec)

Adjustments to this setting affect the time between stir cycles. The stir cycle occurs in “Serve Mode”, “Standby Mode”, and “Sleep 2 Mode”.

On Time (sec)

Increasing this value increases the length of the freezing cycle during “Standby Mode” and result in a decrease of average product temperature in the barrel.

Off Time (sec)

Increasing this value increases the time between freezing cycles in “Standby Mode” and result in an increase of product temperature in the barrel.

Stb Time (sec)

This setting determines the total amount of time in “Standby Mode”.

Sl1DrvOn (sec)

Adjustments to this setting affect the amount of time the auger rotates in the stir cycle. This stir cycle only occurs in “Sleep 1 Mode”.

Sl1DrOff (sec)

Adjustments to this setting affect the time between stir cycles. The stir cycle only occurs in “Sleep 1 Mode”.

Sl2CutIn (°F)

Changing this setting affects the temperature at which the freezing cycle starts in “Sleep 2 Mode”.

Sl2CtOut (°F)

Changing this setting affects the temperature at which the freezing cycle stops in “Sleep 2 Mode”.

DftOffTm (sec)

In “Serve Mode”, this value determines the maximum time without a freezing cycle. If this value is met, a freezing cycle starts. In the event of a freezing cylinder temperature sensor failure, this value affects the amount of time between freezing cycles during “Serve Mode”.

Refriger

This setting changes how the control handles the storage refrigeration cycle. The setting for the E111 & F111 is 1 Hopper.

HprCutIn (°F)

This setting determines the temperature at which the hopper refrigeration cycle starts. This setting is only available on the left control.

HprCtOut (°F)

This setting determines the temperature at which the hopper refrigeration cycle stops. This setting is only available on the left control..

Hpr Off (min)

If the temperature sensor in the hopper fails, this setting determines the time between hopper refrigeration cycles. This setting is only available on the left control..

Hpr On (sec)

If the temperature sensor in the hopper fails, this setting determines the length of the hopper refrigeration cycle. This setting is only available on the left control..

4.8 DRIVE BELT TENSION ADJUSTMENT (SERVICE PERSONNEL ONLY)

To check belt tension, refer to Figure 4-3 and follow the steps below:

WARNING

Hazardous voltage

The Main Freezer Power switch must be placed in the OFF position when disassembling for servicing. The machine must be disconnected from electrical supply before removing any access panel. Failure to disconnect power before servicing could result in death or serious injury.

WARNING

Pinch point

Moving parts can crush or cut. Keep hands clear of belt and pulleys. Follow proper lockout procedures before servicing.

A. Remove the back panel.

B. Use a Burroughs Belt Tension Gauge to set the tension for the drive belt. Set the belt tension to 30-40 lbs. If an adjustment is necessary, complete the following:

1. Adjust belt tension bolt clockwise to increase tension.

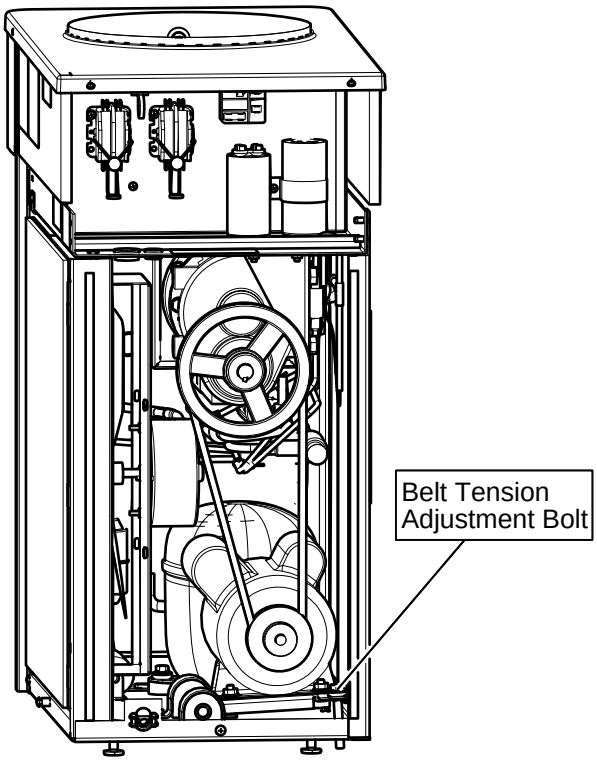

Figure 4-3 Belt Tension Adjustment

2. Make sure the drive motor pulley is aligned with the speed reducer pulley. Align the pulleys if necessary.

NOTE

Belt life is increased if new drive belts are tightened after two or three weeks of operation.

4.9 CONDENSER CLEANING (AIR-COOLED MACHINES)

The condenser requires periodic cleaning. To clean, refer to the following procedures:

. Disconnect power to the machine.

. Remove the right side panel and the rear panel.

. To remove the condenser filter, grasp the top and pull off. Visually inspect for dirt. If it is dirty, shake or brush excess dirt off of it and wash it in warm, soapy water. Once the filter is clean, rinse it thoroughly in warm, clear water and shake dry, taking care not to damage it in any way.

NOTE

If the condenser is not kept clean, refrigeration efficiency will be lost.

4.10 PREVENTATIVE MAINTENANCE

It is recommended that a preventative maintenance schedule be followed to keep the machine clean and operating properly. The following steps are suggested as a preventative maintenance guide.

The United States Department of Agriculture and the Food and Drug Administration require that lubricants used in food zones be certified for this use. Use lubricants only in accordance with the manufacturer's instructions.

A. Daily checks

Check for any unusual noise or condition and repair immediately.

B. Monthly checks

Check the condenser filter for dirt and clean if necessary.

C. Quarterly Checks

Check drive belts for wear and tighten belts if necessary.

4.11 EXTENDED STORAGE

Refer to the following steps for storage of the machine over any long period of shutdown time:

A. Thoroughly clean all parts that come in contact with mix with warm detergent water. Rinse in clear water and dry all parts. Do not sanitize.

NOTE

Do not let cleaning solution stand in freezing cylinder or hopper during the shutdown period.

B. Remove, disassemble, and clean the front door, and auger shaft. Leave disassembled during the shutdown period.

C. Place the auger flights and auger support bushing in a plastic bag with a moist paper towel. This prevents them from becoming brittle if exposed to dry air over an extended period of time (over 30 days).

D. For water-cooled machines that are left in unheated buildings, or buildings subject to freezing, the water must be shut off and disconnected. Disconnect the water inlet fitting. The fitting is located at the rear of the machine. Run the compressor for 2 - 3 minutes to open water valve (the front door must be attached for the compressor to run). Blow out all water through water inlet. Drain the water supply line coming to the machine. Disconnect the water outlet fitting.

E. Place the Main Freezer Power OFF/ON switch in the OFF position.

F. Disconnect the machine from the source of electrical supply.

SECTION 5
TROUBLESHOOTING

5.1 ERROR CODES

When the machine experiences a problem, one of the following error codes are displayed on the control panel. Each error code directs you to the system location of the malfunction.

ERROR CODE	MALFUNCTION
1	Soft
2	High Torque
3	Run Time
4	Clean
5	Freezing Cylinder Sensor
6	Hopper Sensor (single hopper machines)
7	Drive Motor
8	Cab Sensor
9	High Pressure Cutout
10	Auxiliary Sensor
11	Low Temperature
12	Left Hopper Sensor
13	Right Hopper Sensor

To return the machine to normal operation, any error causing condition must be corrected and the Freezing Cylinder Off-On switch must be placed in the Off position and back in the On position before the affected side of the machine returns to normal operation.

5.2 TROUBLESHOOTING

Error Code 1 - Soft Error

The Soft Error (E1) is an internal control board error that is logged for future analysis. The refrigeration is never stopped and the machine continues to operate normally.

Error Code 2 - High Torque

If the control panel displays a High Torque Error (E2), the controller has sensed that the drive motor is running at a high load for 10 or more seconds. This may be due to the product consistency adjustment being set too high. Place the Main Power OFF/ON switch in the OFF position, wait until the product in the freezing cylinder thaws and return the switch to the ON position. Follow the instructions in Section 3 to reduce the product consistency by a few levels. If the error persists, contact your Authorized Stoelting Distributor for further assistance.

Error Code 3 - Run Time

The Run Time Error (E3) occurs when the compressor runs continuously for an extended period or if the product does not reach proper temperature in “Sleep 2 Mode”. This error is generally caused by very low mix levels in the machine’s hopper or from product breakdown. Another common cause results from a restriction preventing mix from entering the freezing cylinder. Check the mix in the hopper. If the level mix is low, add mix. If there is a possibility that the mix has broken down, clean and sanitize the machine and replace the mix with fresh product.

Ice crystals in the hopper can clog the mix inlet system and prevent mix from entering the freezing cylinder. Thoroughly thaw mix per manufacturer’s recommendations. To check for ice crystals, pour a small amount of product from the mix container through a clean and sanitized sieve or strainer. If ice crystals are in the mix, check temperature of the walk-in cooler where the mix is stored.

In air cooled machines, the Run Time Error may indicate that airflow within the machine has reduced or stopped. Check the sides and top of the machine for anything that would restrict airflow.

If the error persists after attempting to clear it, contact your Authorized Stoelting Distributor for further assistance.

Error Code 4 - Clean

If the machine is left in the Clean Mode for more than 20 minutes, the control panel displays a Clean Error (E4). This condition does not reflect a problem with the machine itself. The Clean Error has been programmed into the controller as a safeguard to protect the machine from potential damage caused by the machine being accidentally left in "Clean Mode". The control attempts to restart itself after 5 minutes. The display then flashes and reads Restart. To clear the Clean Error, turn the Freezing Cylinder Off-On switch Off and back On. After restarting the machine, a refrigeration cycle begins. This protects the product in case the clean button was pressed by mistake.

Error Code 5 - Freezing Cylinder Sensor

The Freezing Cylinder Sensor Error (E5) indicates a failure of the barrel sensor or that the sensor is out of range. If the control panel displays an E5, place the Freezing Cylinder Off-On switch Off and back On. If the error persists, contact your Authorized Stoelting Distributor for further assistance.

NOTE

When the machine encounters a Freezing Cylinder Sensor Error, the machine continues to run using preset timers. This mode allows the operator to continue serving product until the machine can be serviced.

Error Code 6 - Hopper Sensor (single hopper machines)

The Hopper Sensor Error (E6) indicates a failure of the hopper sensor or that the sensor is out of range. If the control panel displays an E6, turn the left Main Power Off-On switch Off and back On. If the error persists, contact your Authorized Stoelting Distributor for further assistance.

Error Code 7 - Drive Motor

If the control panel displays a Drive Motor Error (E7), the control does not sense current coming from the drive motor. Turn the Freezing Cylinder Off-On switch Off and back On. If the error persists, contact your Authorized Stoelting Distributor for further assistance.

Error Code 8 - Cab Sensor

A Cab Sensor Error (E8) will not occur on the machine.

Error Code 9 - High Pressure Cutout

High Pressure Cutout Errors (E9) are usually caused by a dirty or inefficient condenser. If the control panel displays an E9 on an air cooled machine, check for proper air clearance around the machine. If the error persists, contact your Authorized Stoelting Distributor for further assistance.

Error Code 10 - Auxiliary Sensor

An Auxiliary Temperature Sensor Error (E10) occurs if the temperature sensor on the control board fails. Turn the Freezing Cylinder Off-On switch Off and back On. If the error persists, contact your Authorized Stoelting Distributor for further assistance

Error Code 11 - Low Temperature

The Low Temperature Error (E11) occurs when the temperature of the gas refrigerant at the barrel sensor falls below -20°F. Although the machine does not shut down, the active freezing cycle immediately ends. This error usually occurs when the machine continues to run in a low mix condition or if the machine runs out of mix. The product towards the front of the barrel tends to freeze solid.

Error Code 12 - Left Hopper Sensor

The Left Hopper Sensor Error (E12) will not occur on the machine.

Error Code 13 - Right Hopper Sensor

The Right Hopper Sensor Error (E13) will not occur on the machine.

Alternating Flashing Control Panel Lights

The display panel lights flash in an alternating sequence under any error codes. Clear the error and place the Freezing Cylinder Off-On switch in the Off position and back in the On position.

5.3 TROUBLESHOOTING - MACHINE

PROBLEM	POSSIBLE CAUSE	REMEDY
Machine does not run.	1 Power to machine is off. 2 Freeze-up (auger will not turn). 3 Front door not in place.	1 Supply power to machine. 2 Turn machine off for 15 minutes, then restart. 3 Assemble front door in place.
Machine will not shut off.	1 Drive belt failure. 2 CutOut setting too high 3 Refrigeration problem.	1 Replace drive belt. 2 Adjust the CutOut (See Section 4) 3 Check system. (Call distributor for service)
Product is too firm.	1 CutOut setting too high	1 Adjust the CutOut (See Section 3)
Product is too soft.	1 No vent space for free flow of cooling air. 2 Condenser is dirty. 3 CutOut setting too low 4 Auger is assembled incorrectly. 5 Refrigeration problem.	1 A minimum of 3” of air space on the sides. (See Section 2) 2 Clean the condenser. (See Section 4) 3 Adjust the CutOut (See Section 4) 4 Remove mix, clean, reassemble, sanitize and freeze down. 5 Check system. (Call distributor for service)
Product does not dispense.	1 No mix in hopper. 2 Drive motor overload tripped. 3 Drive belt failure. 4 Freeze-up (Auger will not turn).	1 Add mix to the hopper. 2 Wait for automatic reset. (If condition continues, call distributor for service.) 3 Replace drive belt. 4 Turn machine off for 15 minutes, then restart.
Drive belt slipping or squealing.	1 Worn drive belt. 2 Freeze-up (Auger will not turn). 3 Not tensioned properly.	1 Replace drive belt. 2 Turn machine off for 15 minutes, then restart. 3 Adjust belt tension
Rear auger seal leaks.	1 Outside surface of rear auger seal is lubricated. 2 Rear seal missing or damaged. 3 Seal o-ring missing, damaged or installed incorrectly. 4 Worn or scratched auger shaft.	1 Clean lubricant from outside of rear seal and thoroughly clean rear of freezing cylinder. Lubricate inside of seal and reinstall. 2 Check or replace. 3 Check or replace. 4 Replace auger shaft.
Front door leaks.	1 Front door knobs are loose. 2 Spigot parts are not lubricated. 3 Chipped or worn spigot o-rings. 4 O-rings or spigot installed wrong. 5 Inner spigot hole in front door nicked or scratched.	1 Tighten knobs. 2 See Section 3. 3 Replace o-rings. 4 Remove spigot and check o-ring. 5 Replace front door.

SECTION 6
REPLACEMENT PARTS

6.1 DECALS AND LUBRICATION

Part	Description	Quantity
C-1000-26C	Decal - Made In USA	1
208135	Brush - 4” X 8” X 16” (Barrel)	1
208380	Brush - 1/4” X 3” X 14”	1
208401	Brush - 1” X 3” X 10”	1
208467	Brush - 3/8” X 1” X 5”	1
236040	Card - Cleaning Instruction	1
324105	Decal - Caution Electrical Shock	1
324106	Decal - Caution Electrical Wiring Materials	1
324107	Decal - Caution Hazardous Moving Parts	1
324141	Decal - Caution Rotating Blades	1
324208	Decal - Attention Refrigerant Leak Check	1
324509	Decal - Cleaning Instructions	1
324584	Decal - Adequate Ventilation 3”	1
324594	Decal - Attention Heat Sensitive	1
324686	Decal - Danger Automatic Start	1
324803	Decal - Domed Stoelting Logo (Large) (Header Panel)	1
324825	Decal - Main Freezer Power	1
368140	Filter - Air (Condenser)	1
396238	Gasket - Freezer Base	1
508048	Lubricant - Spline (2 oz Squeeze Tube)	1
508135	Petrol Gel - 4 oz Tube	1
636071	DVD - Start-Up	1
1183247	O-Ring & Bushing Kit	-
2177917	Brush Kit	-

6.2 AUGER SHAFT AND FACEPLATE PARTS

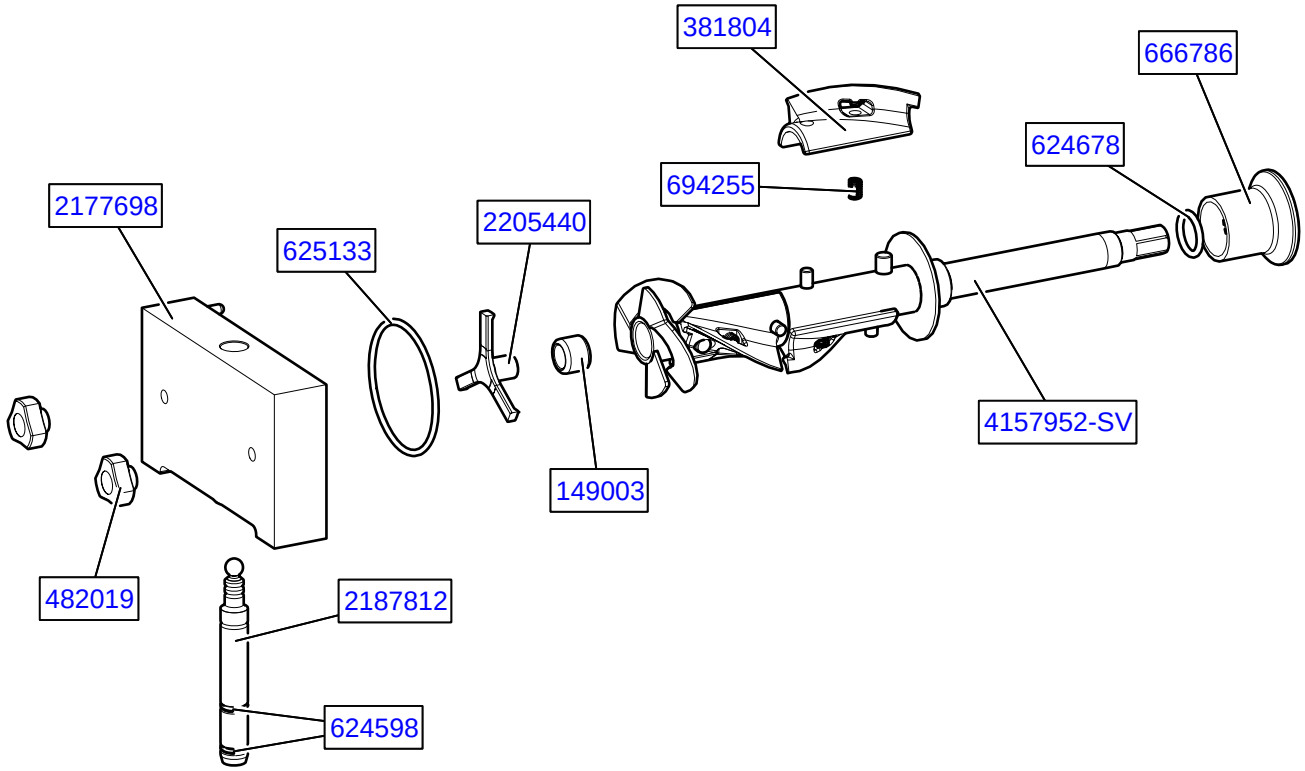

Part	Description	Quantity
149003	Bushing - Front Auger Support	1
381804	Auger Flight	3
624598-5	O-Ring - Spigot Body - Black (5 Pack)	2
624678-5	O-Ring - Rear Seal - Black	1
625133	O-Ring - Front Door - Red	1
666786	Seal - Rear Auger - Black	1
694255	Spring - Auger Flight	3
2177698	Front Door w/Pins	1
2187812	Spigot Body	1
2205440	Support - Front Auger	1
4157952-SV	Auger Shaft	1

6.2 HOPPER COVERS & TRAYS

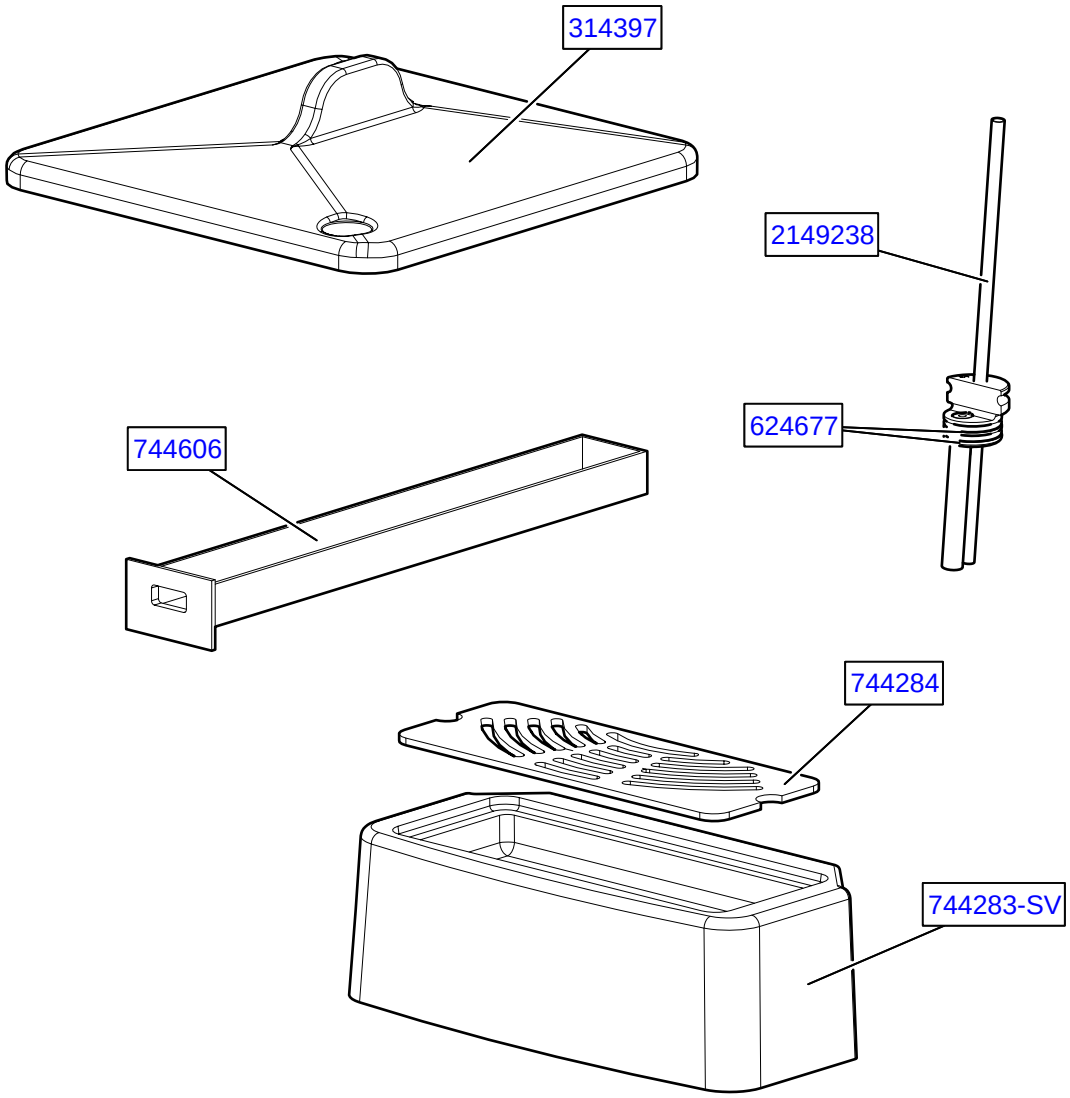

Part	Description	Quantity
314397	Cover - Hopper	1
624677-5	O-Ring - Mix Inlet - Black (5 Pack)	2
744283-SV	Tray - Drip w/Bumper Plugs	1
744284	Insert - Drip Tray	1
744606	Tray - Drain (Black Plastic)	1
2149238	Mix Inlet Assembly - 3/16” Hole - Standard Length (3A)	1