T&S BRASS AND BRONZE WORKS, INC.

2 Saddleback Cove / P.O. Box 1088
Travelers Rest, SC 29690

Travelers Rest, SC: 800-476-4103 • Simi Valley, CA: 800-423-0150 • Fax: 864-834-3518 • www.tsbrass.com

Model No.
B-0113-B-20R

Item No.

This Space for Architect/Engineer Approval

Job Name_____Date_____

Model Specified_____ Quantity_____

Customer/Wholesaler_____

Contractor_____

Architect/Engineer_____

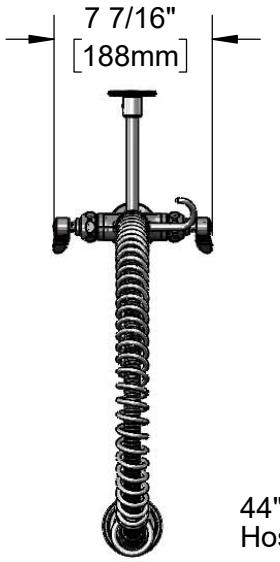

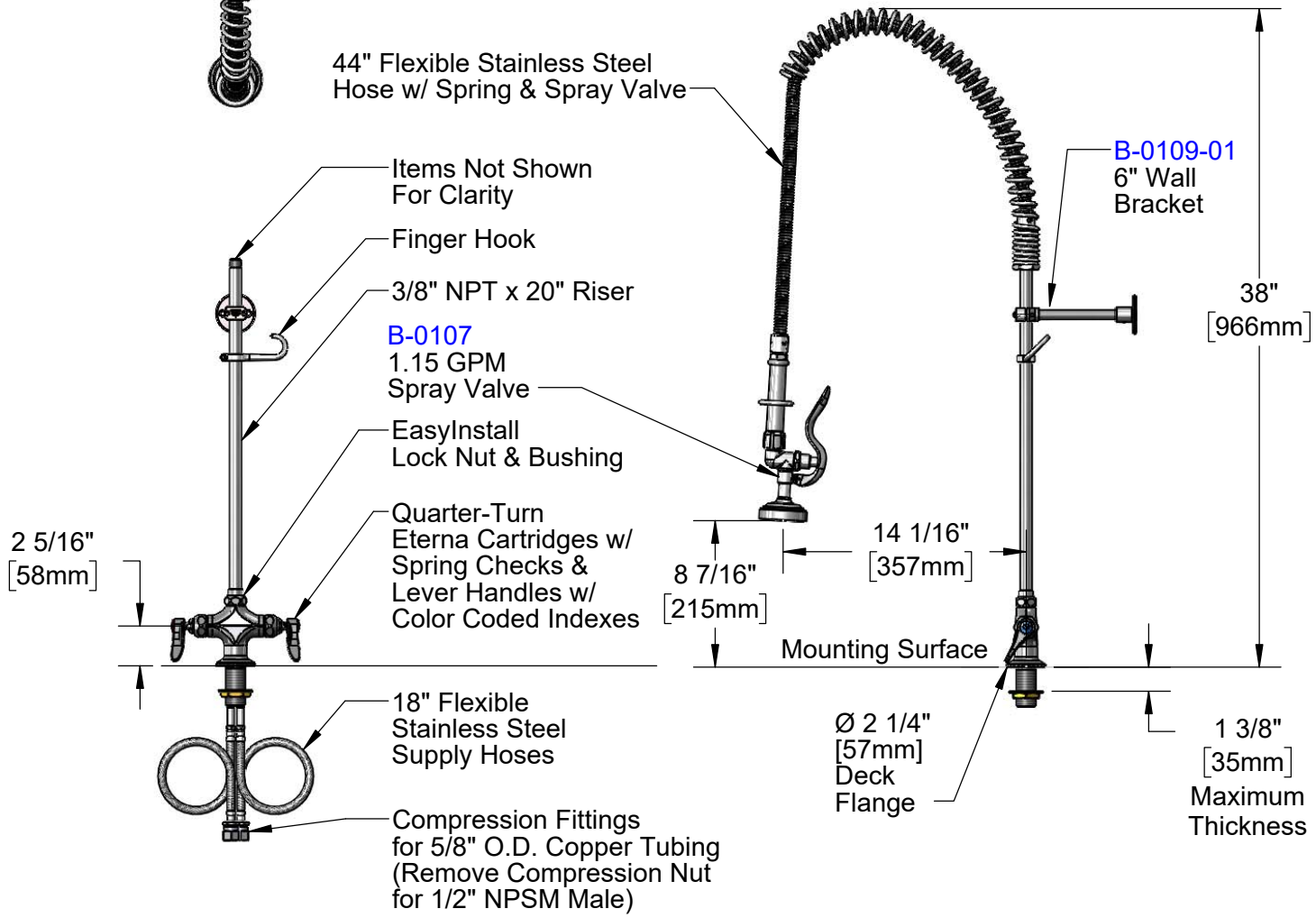

Rough-In Requirement:
∅1 1/2" [38mm] Mounting Hole

Product Specifications:

Pre-Rinse Unit: EasyInstall Single Hole Deck Mount Mixing Faucet, Quarter-Turn Eterna Cartridges w/ Spring Checks, Lever Handles, 20" Riser, 44" Flexible Stainless Steel Hose, 1.15 GPM Spray Valve, 6" Wall Bracket & Flexible Stainless Steel Supply Hoses

Product Compliance:

ASME A112.18.1 / CSA B125.1
NSF 61 - Section 9
NSF 372 (Low Lead Content)
2019 DOE PRSV - Class II

Drawn: AMG	Checked: JRM	Approved: JHB	Date: 03/21/19	Scale: 1:10	Sheet: 1 of 2

T&S BRASS AND BRONZE WORKS, INC.

2 Saddleback Cove / P.O. Box 1088
Travelers Rest, SC 29690

Travelers Rest, SC: 800-476-4103 • Simi Valley, CA: 800-423-0150 • Fax: 864-834-3518 • www.tsbrass.com

Model No.

B-0113-B-20R

Item No.

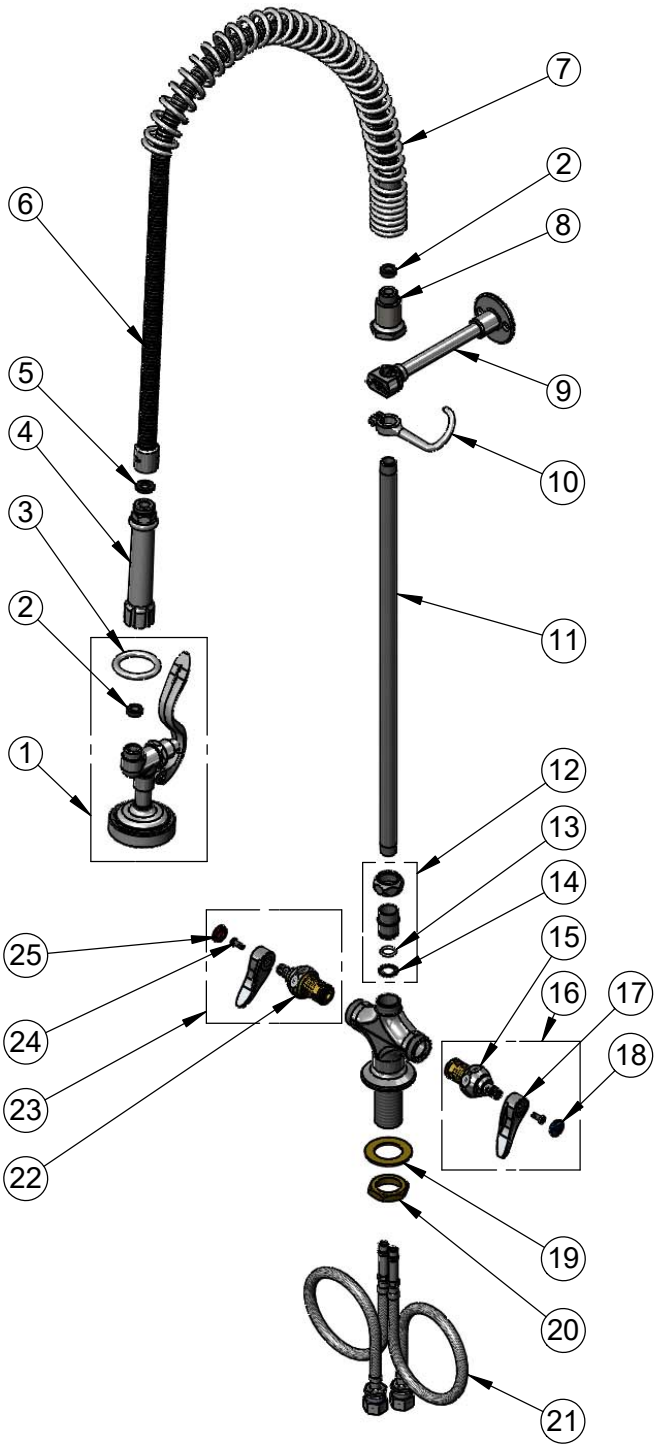

ITEM NO.	SALES NO.	DESCRIPTION
1	B-0107	1.15 GPM Gray Spray Valve
2	010476-45	#27 Washer
3	000907-45	Spray Valve Hold Down Ring
4	002987-40	Grip Handle
5	001014-45	Washer, B-0100 Hose Barrel
6	B-0044-H2A	44" Flexible Stainless Steel Hose, Less Handle
7	000888-45	EasyInstall Overhead Spring
8	000821-40	Spring Body
9	B-0109-01	6" Wall Bracket
10	004R	Finger Hook
11	000370-40	Nipple, 3/8" NPT x 20"
12	EZ-K	EasyInstall Kit: Nut, Bushing, O-Ring & Lock Washer
13	001065-45	O-Ring
14	014200-45	Star Washer, Anti-Rotation
15	012442-40NS	Quarter-Turn Eterna Cartridge w/ Spring Check, LTC
16	002711-40NS	Quarter-Turn Eterna Cartridge w/ Spring Check, Handle, Blue Index & Screw, LTC
17	001638-45NS	Lever Handle (New Style)
18	018506-19NS	Blue Button Index, Press-in
19	002290-45	Lock Washer
20	000965-45	Lock Nut
21	012534-45	18" Flexible Supply Hose (2)
22	012443-40NS	Quarter-Turn Eterna Cartridge w/ Spring Check, RTC
23	002712-40NS	Quarter-Turn Eterna Cartridge w/ Spring Check, Handle, Red Index & Screw, RTC
24	000925-45	Lab Handle Screw
25	001193-19NS	Red Button Index, Press-in

Product Specifications:

Pre-Rinse Unit: EasyInstall Single Hole Deck Mount Mixing Faucet, Quarter-Turn Eterna Cartridges w/ Spring Checks, Lever Handles, 20" Riser, 44" Flexible Stainless Steel Hose, 1.15 GPM Spray Valve, 6" Wall Bracket & Flexible Stainless Steel Supply Hoses

Product Compliance:

ASME A112.18.1 / CSA B125.1
NSF 61 - Section 9
NSF 372 (Low Lead Content)
2019 DOE PRSV - Class II

Drawn: AMG	Checked: JRM	Approved: JHB	Date: 03/21/19	Scale: NTS	Sheet: 2 of 2