Vogt Tube-Ice®
Mid-Size Machine
HFO3

Manual Part Number 12A4171M07HFO
Revision 2 – May 2025

Vogt Ice®, LLC
1000 W. Ormsby Ave.
Suite 19
Louisville, KY 40210 USA
Since 1880

Sales / Technical Support / Parts: +1-502-635-3000

Service Manual
$50.00 USD

Important Safety Information

Any improper attempt to repair major equipment may result in personal injury, property damage, or loss of life. Before installing, operating, adjusting, or servicing the HFO3, please read this manual and become familiar with its contents, understand the operation of this machine, and be aware of possible dangers.

Safety Symbols and What They Mean

Note the following safety symbols, which may appear in this manual and/or on the machine.

Symbol	Meaning
	Danger: Indicates an immediate hazard and that special precautions are necessary to avoid severe personal injury or death.
	Warning: Indicates a strong possibility of a hazard and that an unsafe practice could result in severe personal injury.
	Caution: Indicates that hazards or unsafe practices could result in personal injury or damage to product or property.

NOTICE

This manual belongs to the owner of the following Vogt Ice machine:

Model #_____ Serial #_____

This manual must remain on the premises with the above-listed machine at all times. After machine start-up, store the manual in a safe place where it can be readily available for future reference in maintaining, troubleshooting, or servicing the machine. Designate a person to be responsible for the manual.

Failure to comply with this notice will result in unnecessary inconvenience and possible additional expenses.

This manual is designed to assist with the installation, start-up, operation, maintenance, troubleshooting, and servicing of this equipment. This Tube-Ice® machine is designed to provide a lifetime of service when installed, maintained, and serviced properly.

This information is intended for use by individuals with adequate backgrounds in electrical, refrigeration, and mechanical expertise. Neither the manufacturer nor seller is responsible for the interpretation of this information, nor can they assume any liability in connection with its use.

If a situation calls for additional information not found in this manual, contact your distributor. If further assistance or information is needed, contact the factory by calling +1-502-635-3000.

Please read this manual carefully before attempting installation, operation, or servicing of this professionally designed piece of equipment.

The Customer Support group at Vogt Ice, LLC, provides assistance for all customer service needs, including part sales, technical support and warranty support.

The model and serial number of this Vogt equipment is located on the nameplate attached to the left side of the electrical control panel.

To enable Customer Support to handle your questions quickly and accurately, refer to the model and serial number when making inquiries about this machine. This information, **along with the job number**, is also located on the info screen of the HMI.

Warranty Registration/Start-Up Form

The Warranty Registration/Start-Up Form on the next page must be completed and returned to Vogt Ice, LLC, within 2 weeks after the official start-up of the machine to initiate and ensure a full warranty. The form must be completed and either mailed to the address below or scanned and emailed to techsupport@vogtice.com. This form is also available online at https://www.vogtice.com/wp-content/uploads/2023/07/Warranty-Startup-Form.pdf

Please mail the completed form to the address below or email to techsupport@vogtice.com

Vogt Ice, LLC
Warranty Department
1000 W. Ormsby Ave, Suite 19
Louisville, KY 40210 USA

Vogt Ice, LLC **1000 W. Ormsby Ave, Suite 19** **Louisville, KY 40210 USA** **Phone: +1-502-635-3000**	Vogt® Tube Ice	**Vogt Job No.:**
		THIS FORM **MUST** BE SENT TO VOGT TO ACTIVATE WARRANTY

Warranty Registration/Start-Up Form – Mid-Size Tube-Ice® Machines

Model Number:		**Serial Number:**	

This form must be filled out completely and signed by the customer in order to assure acceptance by Vogt.

Date of Start-Up: (MM/DD/YYYY)		**Form Completed By:**	

Distributor / Dealer

Company Name:				**Phone Number:**			
Address:		**City: Country:**		**State:**		**Zip:**	

Service Company

Company Name:				**Phone Number:**			
Address:		**City: Country:**		**State:**		**Zip:**	

Customer (Location of Equipment)

Company Name:				**Phone Number:**			
Address:		**City: Country:**		**State:**		**Zip:**	

PRE-OPERATION CHECK

- ☐ Machine room temperature between 50°F [10°C] and 110°F [43°C] max.
- ☐ Power Supply ____ V _____ Hz (machine not running)
- ☐ Compressor crankcase heater on for 2-hour minimum

- ☐ All valves opened or closed as tagged
- ☐ All solenoid valve stems in automatic position
- ☐ **System checked for leaks and none found; all connections tight**
- ☐ Auxiliary equipment overloads wired into control circuit
- ☐ Water supply and drains connected properly
- ☐ Sufficient makeup water supplied (minimum 30 psig [2 bar])
- ☐ Instruction manual and warranty certificate left onsite

OPERATION CHECK

- ☐ Pump motor rotation direction correct (motor fan clockwise)
- ☐ Cutter rotation direction correct (counter clockwise when looking from top)
- ☐ Compressor motor rotation direction correct, if applicable
- ☐ Power supply ____ V ____ Hz (machine running)
- ☐ Water pump amps RLA ____ Actual ____
- ☐ Condenser motor amps ____ (if applicable for AC only)
- ☐ Incoming water temperature ____ °F (°C)
- ☐ Clear ice ☐ Yes ☐ No
- ☐ Suction pressure: End of freeze ____ (psig [bar]
  End of defrost ____ (psig [bar]
- ☐ Discharge pressure: End of freeze ____ (psig [bar]
  End of defrost ____ (psig [bar]

Comments & feedback:

I certify that I have performed all the above procedures.

Technician Signature:		**Customer Signature:**	

Date: _____ Date: _____

Table of Contents

HFO3 Mid-Size Ice Machine

Important Safety Information i
Safety Symbols and What They Mean i
NOTICE ii
Warranty Registration/Start-Up Form ii

Introduction 1

How the HFO3 Machine Works 2
Principles of Operation 2
Model Number 3
Piping 4
Freezing Period 7
Harvest Period 7
Refrigeration System Overview 8
Charging Refrigeration Systems 9

Receipt of Machine 10
State of New Machine 10
Inspection 10
Delivery Inspection Checklist 10
Safety Tags and Labels 10
Pressure Relief Valves 10
Machine Location 11
Equipment Storage 11
Rated Capacity 11
Machine Connections, Equipment Layout and Service Access 12
Important Warranty Notice 15
Ice Storage Bin Installation 15
Lifting Procedures 16
Equipment Anchoring 18
Piping and Drain Connections 19
Water-Cooled Condenser Connections (Water-Cooled Machines Only) 20
Cooling Tower (Water-Cooled Machines Only) 20
Pressure Relief Valves 21
Wiring and Electrical Connections 21
Phase Check 22
Voltage Imbalance 22
Current Imbalance 23
Air-Cooled Condenser Installation 24
Ice Bin Thermostat Sensor 32
Programming the Electronic Bin Thermostat 33
Installation Checklist 34

Start-Up, Shutdown, and Operation 35
Start-Up Checklist 35
Start-Up Procedure (Initial Start-Up) 35
Shutdown Procedure 36

Start-Up and Shutdown Tips 36
Ice Quality 36
Adding Refrigerant 37

Electrical Controls and Their Functions 38
Control Panel Layout 39
Electrical Schematic 40
Control Panel Parts 42
Allen Bradley PLC with Touch Screen HMI 43
HMI Main Menu 43
HMI Primary Submenus 45
HMI Home Screen 50
HMI Detailed Screens 52
Control Panel Details 65

Maintenance 66
Cleaning 66
Sanitizing 68
Water Distributors 69
Water Tank 70
Water-Cooled Condensers 70
Chemical Cleaning 72
Mechanical Cleaning 72
Compressor Lubrication 73
Lubrication of the Cutter Motor Gear Reducer 75
Preventive Maintenance 75
Daily Checklist 75
Weekly Checklist 76
Monthly or Yearly Checklist 76
Preventive Maintenance Form 77

Troubleshooting 78
Machine Not Running 78
Freeze-Up from Extended Freeze Period 79
Freeze-Up from Ice Failing to Discharge 80
Poor Ice Quality 81
Low Ice Capacity 81
High Head Pressure (Water-Cooled Machines) 82
High Head Pressure (Air-Cooled Machines) 83

Servicing Operations 84
Adjustable Blowdown (for Clearer Ice) 84
Automatic Blowdown 84
Makeup Water Float Valve 84
Hand Expansion Valve 85
Freezer Pressure Setting on Touch Screen HMI 85
Low Pressure Safety on Touch Screen HMI 85
High Pressure Safety on Touch Screen HMI 85
Head Pressure Control 85
Fan Cycling Pressure on Touch Screen HMI 85
Water-Regulating Valve (Water-Cooled Machines) 86

Cleaning Water-Cooled Condenser 86
Compressor Motor Protection—Coresense 87
Compressor Motor Burnout 88
Compressor Crankcase Heater 89
Oil Separator 90
Control Circuit Protection 90
Harvest Timer 90
Pumpdown 91
Removing Refrigerant 92
Refrigerant Leaks 93
Non-Condensable Gases 93
Solenoid Valves 94
Capacity Control Valves 95
Circulating Water Pump Motor. 96
Cutter Gear Reducer 96
Cutter Motor Replacement 97
Cutter Gear Reducer Removal and Replacement 97
Water Tank Removal 98
Cutter and Bearing Removal and Reinstallation 98
Crushed Ice Production 102

Appendix A Optional Accessories 103
Power Monitor, Wagner Model DTP-3 103
The Display 103
Adjustment of Parameters in Order of Display 104

Appendix B Tables 106

Appendix C Additional Documentation 112

Introduction

Since Vogt first introduced Tube-Ice® machines in 1938, the process of making Tube-Ice® ice has been widely recognized as the most efficient means of ice production. These machines' economic and reliable operation has been proven repeatedly in a variety of installations throughout the world. The skill in engineering and fabrication Vogt Ice has learned in more than eight decades of experience is reflected in the HFO machine series.

Using as little as one-half of the energy required by competing ice makers, Tube-Ice® machines produce the same amount of ice at great savings—in restaurants, sports arenas, packing plants, industrial and wholesale operations around the world.

In addition, Tube-Ice® machines are renowned for their long service life, giving many customers more than 35 years of dependable service. Ask someone who owns one.

Hydrofluorocarbon (HFC) refrigerants are experiencing a phase-out in a variety of markets across the globe because of their high Global Warming Potential (GWP). This forces Original Equipment Manufacturers (OEMs) to build forward-thinking business strategies when selecting a replacement refrigerant for use in their equipment.

The challenge with implementing synthetic refrigerants in ice machines is to find the perfect balance between something that will work well in the application and be available for purchase for the foreseeable future. Finding this balance has been Vogt's focus.

How the HFO3 Machine Works

Warning: Only service personnel experienced and certified in refrigeration and qualified to work with high-voltage electrical equipment should be allowed to install or work on this Tube-Ice® machine.

Principles of Operation

Manual operation of the machine is controlled by the **Off, Ice,** and **Start** touch screen buttons on the **Home** screen of the HMI. These buttons appear on the default screen when power is supplied to the machine.

Note: Further references in this manual to the **Off, Ice, Start,** and **Run Water Pump** buttons are found on the **Home** screen of the HMI, see **Figure 1**.

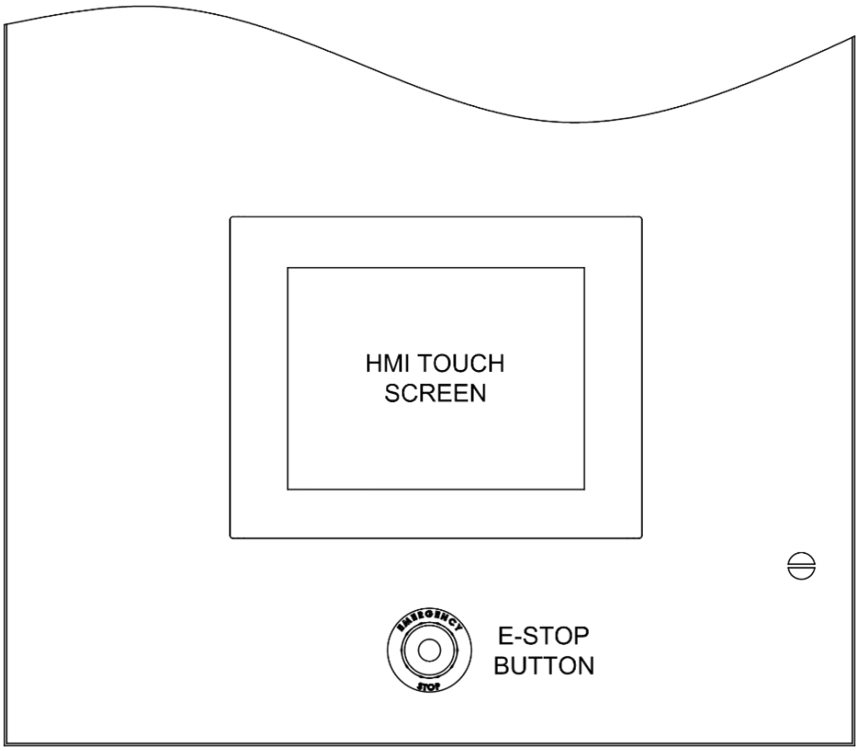

Figure 1: Control Panel Door

Automatic operation is controlled by the standard ice bin thermostats (BLC), which stop and start the ice maker based on the level of ice in the storage bin.

The type of ice produced, cylinder or crushed (optional), is determined by how the machine cutter is set up.

The unit will only stop after a thawing (harvest) period has been completed, whether by the pressing the **Off** touch screen button or when the ice bin thermostat is satisfied. To stop the machine instantly, push the **E-Stop** button. To restart the machine, turn the **E-Stop** button clockwise, clear the **E-Stop** fault on the touch screen, and push the **Start** touch screen button.

Air-cooled machines have a solenoid valve, referred to as the X valve, or the cold weather valve in the compressor discharge line and a check valve in the liquid return line to the receiver. These valves prevent the migration of refrigerant when the machine is not operating. The X valve is always open when the compressor is running.

Model Number

The machine nameplate is located on the left side of the control panel as well as on the HMI info screen. The model number and machine description are located in the top left-hand corner of the nameplate. **Figure 2** can be used to verify that the correct model has been received.

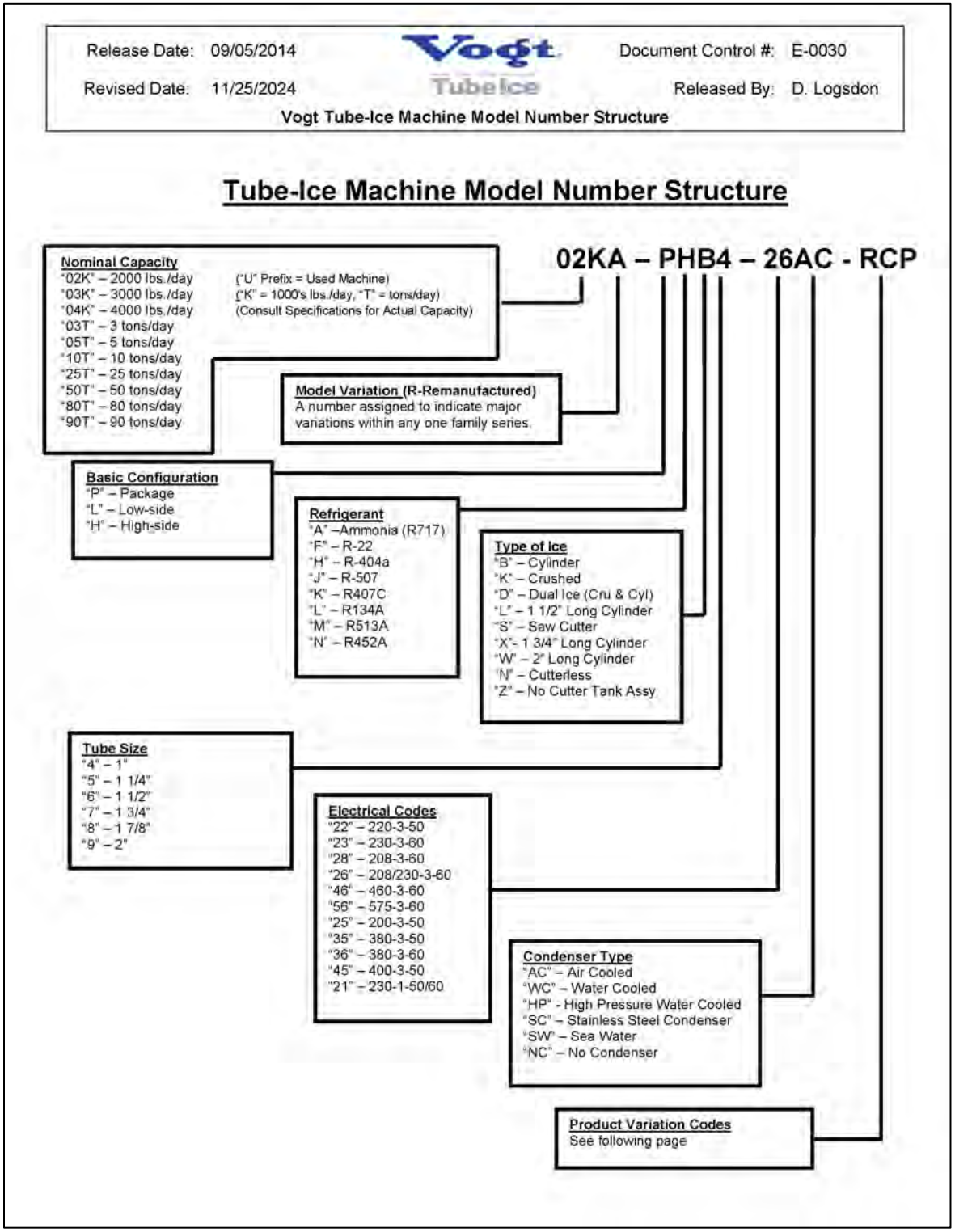

Figure 2: Vogt Model Nomenclature

Piping

Table 1 lists the piping nomenclature as labeled in Figure 3 and Figure 4, which illustrate the piping schematics of the refrigerant and water circuits of water-cooled (WC) and air-cooled (AC) Tube-Ice® machines.

Table 1: HFO3 Piping Nomenclature

	Description		Description
1	Control Panel	**32**	Condenser Service Connection, AC Machines only
	Suction Pressure Transducer		
	Discharge Pressure Transducer		
2	Freezer	**34**	Compressor Suction Service Valve
3	Compressor	**35**	Compressor Discharge Service Valve
	High Pressure Safety Switch	**37**	Oil Charging/Drain Valve
5M	Cutter Motor	**39**	Water Tank Drain Valve
5R	Cutter Gear Reducer	**40**	Automatic Water Tank Blowdown
6	Water Pump	**41**	Condenser Water Regulator (WC Machines)
6A	Water Pump Check Valve		
7	Water Tank (includes cutter assembly)	**43**	Strainer
8	Water Distributing Chamber	**44**	Receiver Drain Access Port
12	Makeup Water Float Valve	**46**	Filter Dryer
13	Heat Exchanger	**48**	Muffler
14	Oil Separator	**50**	Receiver Safety Relief Valve
15	Condenser, either WC or AC	**51**	Freezer Safety Relief Valve
15R	Receiver	**52**	Water Regulating Stop Valve, WC Machines only
16	Thawing Chamber	**53**	Cold Weather Solenoid Valve “X” (AC Machines)
17	Expansion Valve	**55**	Discharge Line Stop Valve For AC Machines
18	Thaw/Gas Solenoid Valve (D Valve)	**58**	Liquid Stop Valve (**King Valve**)
20	Liquid Line Solenoid Valve (A Valve)	**69**	Freezer Pressure Stop Valve
23	Condenser Water Inlet, WC Machines only	**70**	Oil Return Stop Valve
23A	Makeup Water Inlet 1/2-in. MPT	**88**	Accumulator/Heat Exchanger
24	Condenser Water Outlet, WC Machines only	**90**	Thawing Gas Stop Valve
25	Water Tank Drain Connection 3/4-in. FPT	**91**	Receiver Liquid Return Stop Valve
28	Refrigerant Charging Valve	**94**	Compressor Oil Pressure Safety Control
30	Receiver Sight Glass	**101**	Check Valve, AC Machines only
31	Sight Glass Stop Valves	**XX**	Expansion Valve Equalizing Line

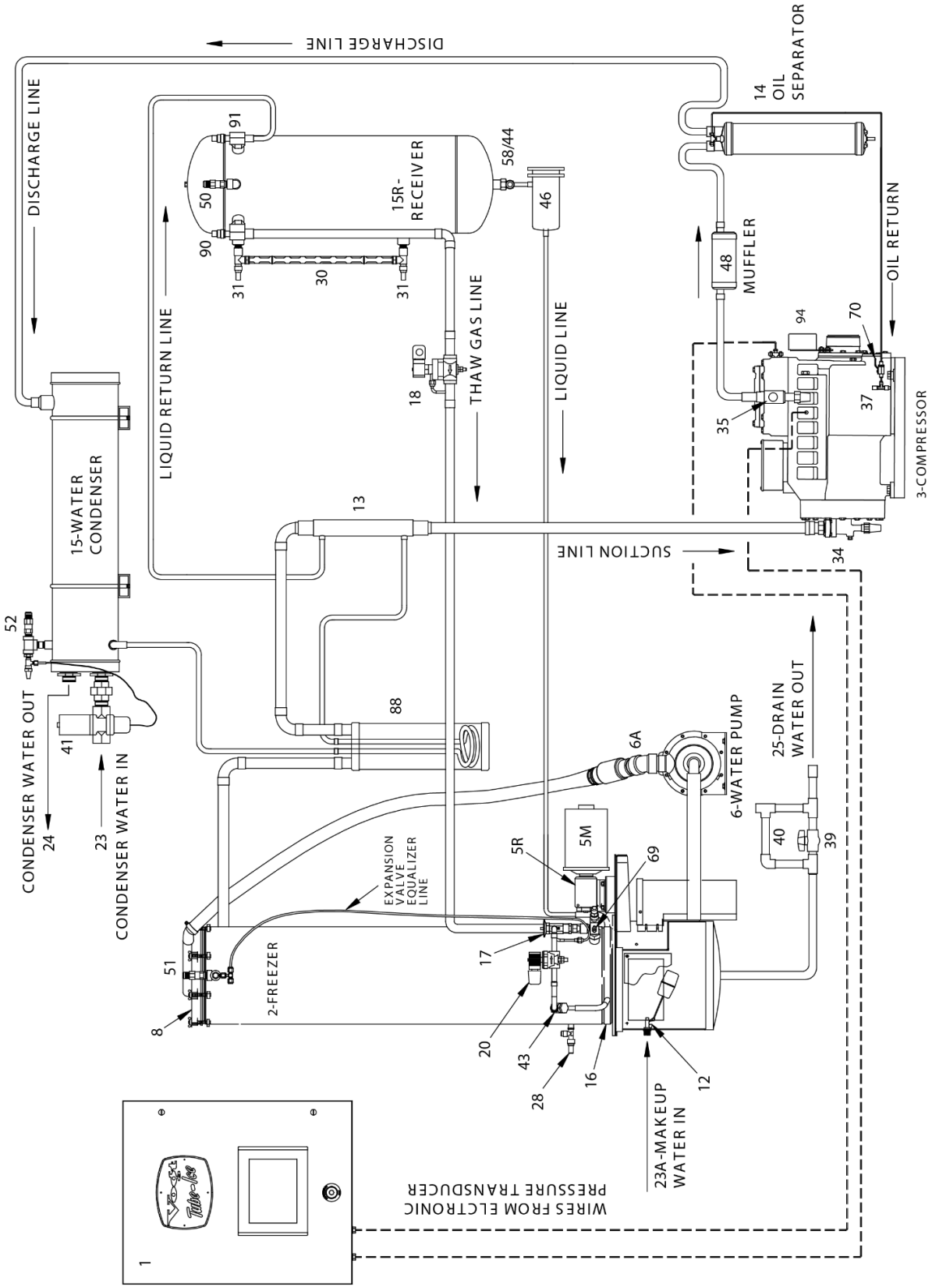

Figure 3: Water-Cooled Piping Schematic

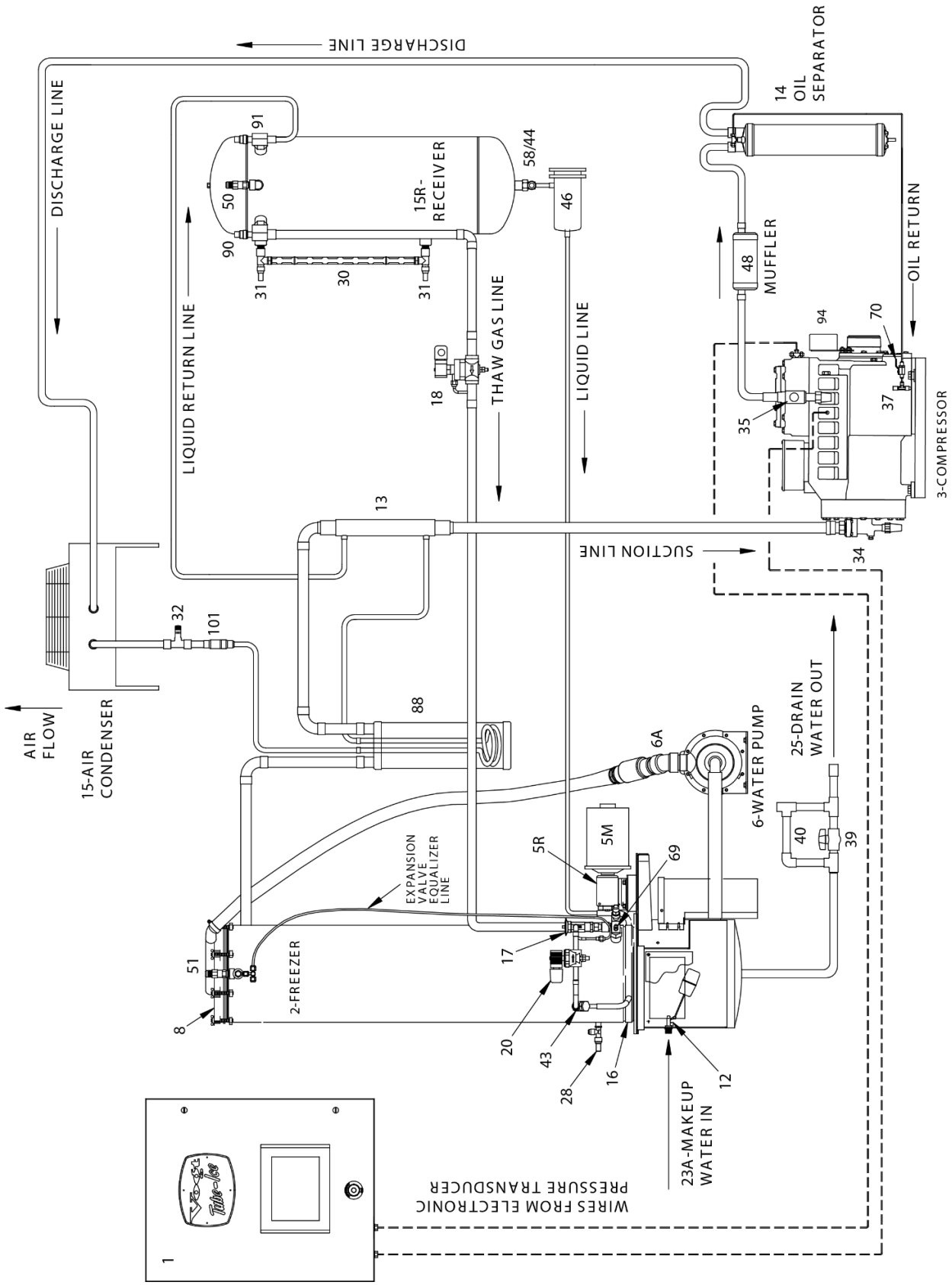

Figure 4: Air-Cooled Piping Schematic

Freezing Period

The freezer is a shell-and-tube type vessel, consisting of an outside shell with vertical tubes inside. Water freezes inside the tubes by the direct application of refrigerant to the shell side (outside) of the tubes. Ice is produced as the water continues to recirculate. As the ice thickens, the freezer suction pressure decreases. The **Freezer Pressure Setting** (FPS) controls the freezing time period for the production of cylinder or crushed ice. It can be adjusted on either the **Quick Setup** screen when viewing the **Home** screen on the HMI, or from the pressure submenu in the **Setup** menu.

During the freezing period:

1. Water is constantly recirculated through the freezer tubes by a centrifugal pump.
2. Makeup water is maintained at the appropriate level by a float valve in the water tank.
3. A liquid line solenoid valve (A valve) is open, and a thaw gas solenoid valve (D valve) is closed.
4. Refrigerant gas from the top of the freezer passes through the suction accumulator, the heat exchanger, and the compressor.
5. The cool gas is compressed to a high-temperature, high-pressure gas that discharges through the oil separator and into the condenser.
6. In the condenser, heat is removed, and the gas is condensed to a high-temperature, high-pressure liquid.
7. This high-pressure liquid goes through the accumulator boil-out coil and suction line heat exchanger, where it gives up heat to the suction gas for compressor protection.
8. This liquid is subcooled and carried to the receiver.
9. Condensed liquid refrigerant from the receiver flows through the thawing chamber of the freezer, the filter dryer, the liquid line solenoid valve (A valve), and then the expansion valve and capillary.
10. At the expansion valve, the refrigerant expands from a saturated liquid state of relatively high pressure to a very low-pressure, low-temperature liquid.
11. The cold liquid refrigerant enters the freezer, where it absorbs heat from the circulating water.
12. This cool gas is pulled out of the freezer at the suction outlet, thereby completing the circuit.

The freezing period is completed by the Freezer Pressure Setting (FPS), that can be adjusted on the **Quick Setup** screen when viewing the **Home** screen on the HMI.

1. Once the suction pressure drops to the FPS, the freeze cycle is over.
2. The water pump stops, and the liquid line solenoid valve (A valve) closes.
3. The thawing / harvest period begins.

Harvest Period

During the harvest period:

1. The water pump is stopped and after an adjustable delay the cutter motor starts.
2. The liquid line solenoid valve (A valve) closes, the thaw gas solenoid valve (D valve) is cycled opened to regulate the suction pressure. The harvest timer can be adjusted through the **Quick Setup** submenu from the **Home Screen** of the HMI, or from the timer submenu in the **Setup** menu.
3. The defrost pressure setting on the “Pressures” screen of the HMI opens and closes the D valve to maintain the proper pressure for ice to release without adding unnecessary heat.
4. Warm gas from the receiver is discharged into the freezer through the D valve, and the outer edge of the ice slightly thaws for sizing by the rotating cutter.
5. As the ice releases and drops through the rotating cutter and onto the cutter disc, it discharges through the side opening of the water tank assembly.
6. The harvest timer should be set for the time required to discharge all of the ice **plus 30 seconds** (usually about 2.5 minutes).

CAUTION To prevent refreezing, make sure all ice clears the freezer with at least 30 seconds to spare after the last ice is out before the next freezing period begins.

Refrigeration System Overview

The refrigeration system uses hydrofluoroolefin (HFO) based refrigerant R452A.

As shown in the piping schematic, the compressor discharge gas leaves the compressor and goes into the condenser. Here, the gas is condensed into liquid as heat is transferred to the water as it passes through the condenser during the freezing period.

A reservoir of liquid is accumulated in the receiver and flows as required, passing through the thawing chamber (located in the lower section of the freezer) then through the filter dryer. The liquid line solenoid valve (A valve) opens and the liquid level in the freezer is regulated by the thermal expansion valve (TXV).

Liquid refrigerant floods the evaporator and comes in contact with the outside of the ice-making tubes through which water is being circulated. The heat contained in this water passes through the walls of the tubes, lowering the temperature of the water, causing it to freeze and to form a long tube of ice that adheres to the inside of each freezer tube. Since the purest water freezes first, the flowing water keeps the accumulated ice clear by washing separated solids down into the sump area of the water tank. The blowdown valve on the circulating water pump discharge helps to rid the water tank of increased dissolved solids found in harder water by flushing them out of the overflow during water pump operation.

During the harvest period, the water pump stops, therefore, all the water circulating in the freezer drops to the tank, the tank level increases, and the overflow will get rid of that extra water. The overflow is a hole at the top of the tank. Refer to Chapter 9 for more information about automatic blowdown.

The transfer of heat from the water to the liquid refrigerant causes it to boil and convert into a liquid-vapor mixture at the suction connection at the top of the freezer. This liquid-vapor mixture passes through the suction accumulator, where liquid droplets are removed and boiled off from the internal heating coil. The suction line heat exchanger boils off any residual droplets that may have passed through the suction accumulator, providing ample protection for the compressor.

As the ice forms in the freezer tubes, the suction pressure steadily decreases until it reaches the Freezer Pressure Setting (FPS), initiating the harvest period.

During the harvest period, the thaw gas solenoid valve (D valve) is cycled open, allowing warm high-pressure gas from the receiver to enter the freezer. This heat melts a thin film from the outside of the ice, reducing the outside diameter slightly, allowing it to fall free from the freezer tubes. This period lasts approximately 2.5 minutes.

Note: Freezing times will vary, depending on makeup water temperature, ambient temperature, condenser efficiency, and setting of the freezer pressure setting (FPS). As you become more familiar with the operation of your machine, you will be able to recognize and correct minor irregularities as they occur, which will help prevent potential bigger problems.

Charging Refrigeration Systems

CAUTION Only technically qualified persons, experienced and knowledgeable in the handling of refrigerant and operation of refrigeration systems, should perform the operations described in this manual.

All local, federal, and EPA regulations must be strictly adhered to when handling refrigerants. If a refrigeration system is being charged from refrigerant cylinders, disconnect each cylinder when empty or when the system is fully charged.

Included with the machine is the required charge of R452A refrigerant (approximately 170 lb [77 kg]), isolated in the receiver. **Note:** 1" in the receiver sight glass equals approximately 5 pounds of refrigerant. Before shipment of the machine, the compressor service valves and the stop valves in the various lines to the condenser and receiver were closed. These valves are tagged with instructions to be opened before start-up of the machine.

Before opening these valves, check all joints for leaks that may have developed during shipment. If no leaks are present, a positive pressure should show on the suction and discharge pressure gauges on the Status screen of the HMI. They should indicate a pressure approximately equal to the ambient temperature, which can be found using the pressure temperature chart.

A gauge should be installed in the charging line to indicate refrigerant cylinder pressure. The cylinder may be considered empty of liquid refrigerant when the gauge pressure is 25 psig (1.7 bar) or less, and there is no frost on the cylinder. Close the refrigerant charging valve and cylinder valve before disconnecting the cylinder. Loosen the union in the refrigerant charging line carefully to avoid unnecessary release of refrigerant into the atmosphere. Refer to local and national regulations.

CAUTION Immediately close the system charging valve at the commencement of the defrost or thawing cycle if a refrigerant cylinder is connected. Never leave a refrigerant cylinder connected to the system except during charging operation. Failure to observe either of these precautions can result in transferring refrigerant from the system to the refrigerant cylinder, over-filling it, and possibly causing the cylinder to rupture because of pressure from expansion of the liquid refrigerant.

CAUTION It is not recommended that refrigerant be transferred from a refrigeration system directly into a cylinder. If such a transfer is made, the refrigerant cylinder must be an approved, clean cylinder that is free of any contaminants or foreign materials. The cylinder must be connected to an approved recovery mechanism with a safety shutoff sensor to ensure that contents do not exceed the net weight specified by the cylinder manufacturer or any applicable code requirements.

Receipt of Machine

CAUTION Only service personnel experienced in refrigeration and qualified to work with high-voltage electrical equipment should install or work on this machine. Eye protection must be worn by all personnel working on or around the machine. You must be familiar with and adhere to all local ordinances and laws regarding the handling, storing, and use of refrigerants. Refer to the safety data sheet.

State of New Machine

The HFO3 is a packaged ice-making machine, either water-cooled or air-cooled, complete with compressor, oil separator, receiver, and condenser (if water-cooled). The machine was shipped in a fully pumped down state with all refrigerant stored and isolated in the receiver. All valves on the machine are tagged as to their state (open or closed) and their purpose. The machine was cleaned with ice machine cleaner and flushed so that it is ready for ice production.

Inspection

Upon receipt of the Tube-Ice® machine, inspect it for any obvious damage. If damage is found or suspected, note it on the trucker's Bill of Lading. Immediately submit a separate written request for inspection by the freight line's agent. Any repair work or alteration to the machine without the permission of Vogt Ice, LLC, can void the machine's warranty. Also, notify your Vogt distributor and/or the factory.

Delivery Inspection Checklist

- Inspect outer casings (if provided)
- Inspect piping and valves
- Inspect refrigerant sight glass for damage

The machine was shipped with a full refrigerant charge stored and isolated in the receiver. Visually check all lines for mechanical damage. If a leak is suspected, check all joints with a refrigerant leak detector supporting HFO blend refrigerants. All leaks should be reported to Vogt Ice, LLC the same day they were discovered to obtain authorization and instructions for repair.

The machine is factory tested before shipment and supplied with a Certificate of Test report confirming the conditions under which it operated at the factory and that the machine operated as designed. The settings used during factory testing of the machine were saved in the PLC and HMI. The expansion was also adjusted at the factory to achieve optimal performance. Minor adjustment may be required at the installation site.

Safety Tags and Labels

Be sure to read and adhere to all special tags and labels attached to valves or applied to various areas of the machine. They provide important information necessary for safe and efficient operation of your equipment. The unit may have valves in the open or closed position and may be tagged with information about the required position for start-up.

Pressure Relief Valves

Pressure relief valves are included on this packaged Tube-Ice® machine. One is located on the freezer (low-side), one is located on the top of the receiver (high-side), and a third is located on the top of the condenser (high-side) for water-cooled machines only. For air-cooled machines, a pressure relief valve may be field installed at the condenser if required by local or national codes. Vent each of the pressure relief valves in compliance with local and national codes.

DANGER Failure to do so creates a safety hazard that could cause injury or loss of life.

Machine Location

The machine must be located inside a suitable building and must not be subjected to ambient temperatures below 50°F (10°C) or above 110°F (43°C). Heat from other sources, such as sunlight, furnaces, condensers, or unusual air currents (including fans or air-conditioning air flow) may affect the operation of the machine and should be avoided. The electrical components of the Tube-Ice® machine are rated NEMA 1 or IP10. As such, the machine should not be located in a hazardous area or sprayed with water. The machine should be installed on a drainable condensate drip pan or in an area where there is no possibility of standing water, but readily drain away from the machine.

Equipment Storage

If the equipment must be stored before installation, it should be indoors and protected from extreme temperatures and high humidity. These conditions can deteriorate the various components used in the manufacture and assembly of the equipment.

CAUTION This equipment contains the HFO refrigerant blend R452A under pressure. Do not store in an area exposed to temperatures above 115°F (46°C) or in direct sunlight at temperatures above 105°F (40°C).

Rated Capacity

This machine is rated to produce a given amount of ice when operating under the proper conditions as specified in this manual. Be prepared to handle the ice produced as it is discharged from the machine and move it to the storage or bagging area promptly. Each cycle will produce approximately 60 to 65 lbs. (28kg) about every 15 minutes.

Installation of the HFO3

Machine Connections, Equipment Layout and Service Access

Warning: Only service personnel experienced and certified in refrigeration and qualified to work with high voltage electrical equipment are allowed to install or work on this Tube-Ice® machine.

Preparing the machine for operation requires connecting the following to the appropriate locations on the machine:

- Electrical supply
- Makeup water supply
- Water blowdown drain
- Condenser water inlet and outlet (water cooled units)
- Remote condenser refrigeration connections (air-cooled units)

CAUTION The approximate operating weight for the HFO3 is 2,030 lb (921 kg). The HFO3 requires certain clearances around the unit for safety reasons and to provide access for servicing operations.

The diagrams on the following pages show the basic connection locations and clearance requirements of the HFO3 machine.

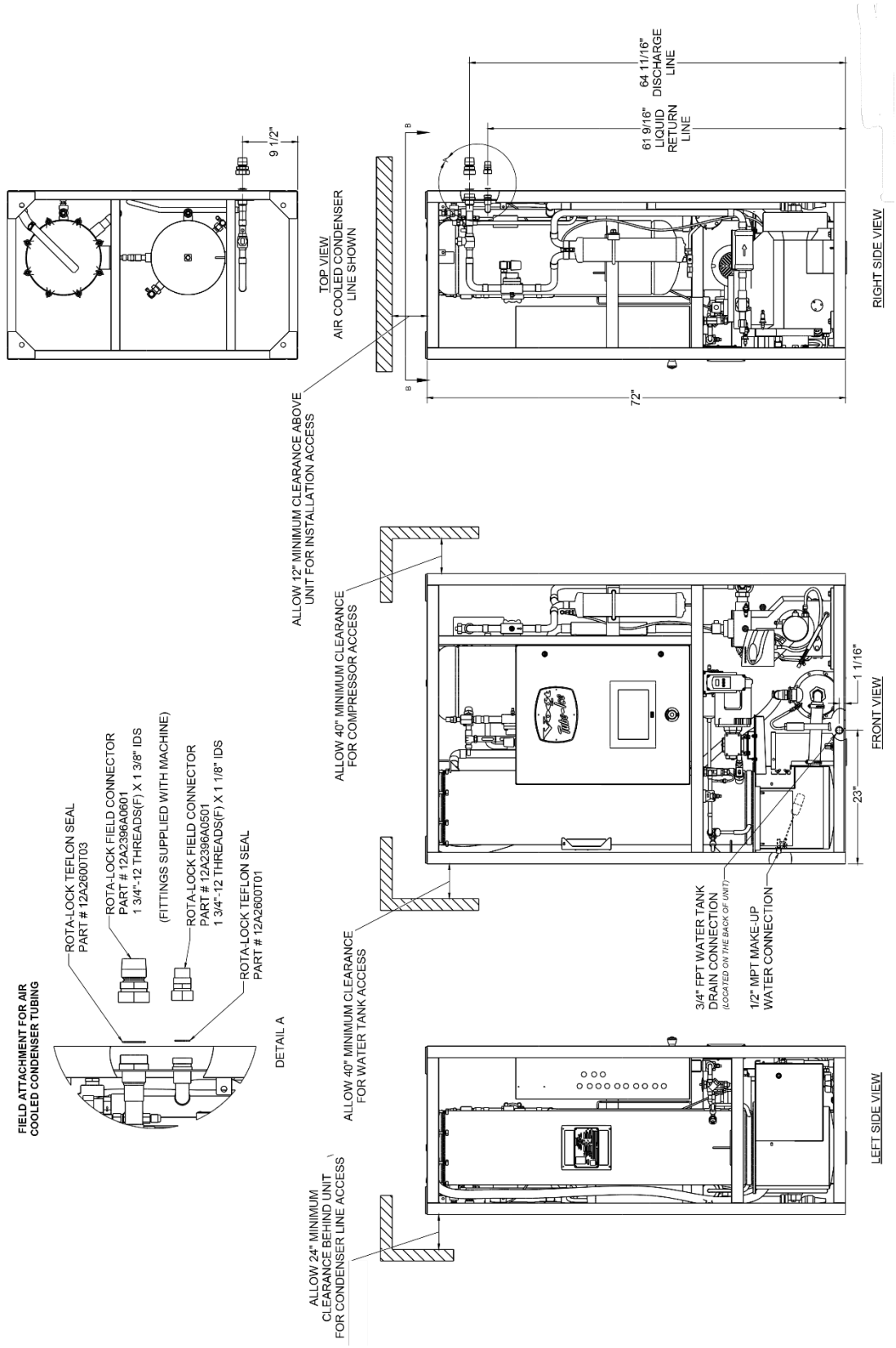

Figure 5: HFO3 Connections and Space Diagram (Air Cooled Machine)

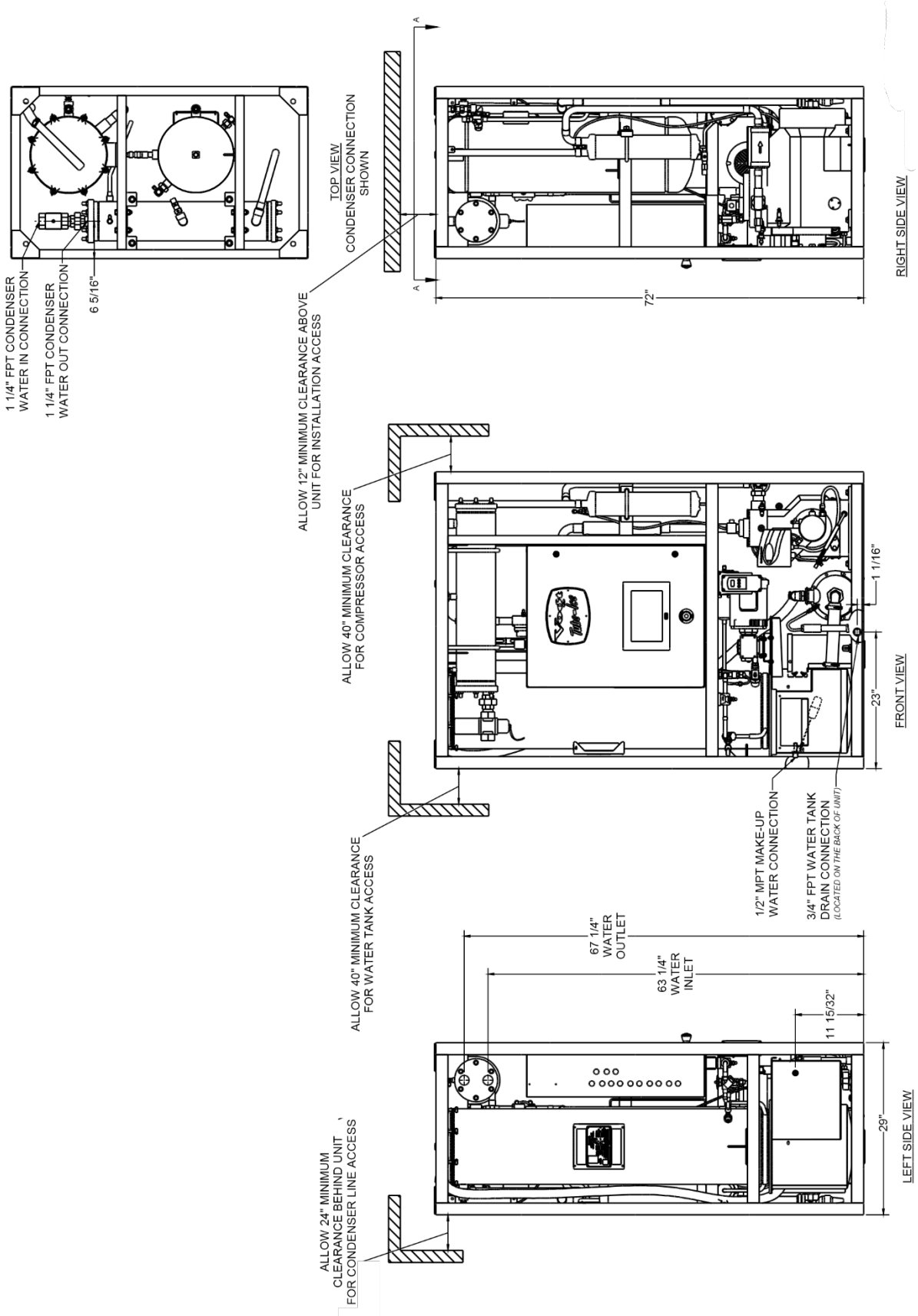

Figure 6: HFO3 Connections and Space Diagram (Water Cooled Machine)

Important Warranty Notice.

Vogt Ice, LLC warrants every **Vogt Tube-Ice® Machine Model HFO3** to be free from defects in material and workmanship, if properly installed, maintained, and operated under normal use for a period of 12 months from date of shipment from Vogt Ice. Upon receipt of an accepted start-up report within 60 days of shipment, Vogt Ice agrees to an additional **3-month extension of warranty from shipping date**. The warranty coverage Product Registration Form is located in the Owners Packet or can be found online at www.vogtice.com/registration.htm.

Ice Storage Bin Installation

Set the ice bin on solid, level footing. Inside the ice bin you will find the four legs. Screw these legs to the bottom of the ice bin. You can make MINOR leveling adjustments by using these legs as leveling screws, as outlined in the manufacturer's instructions.

Setting the ice machine on the ice bin

Once the ice bin is level, the Tube-Ice® machine can be elevated and placed on the ice bin top, providing the ice bin is equipped with the proper drip pan for the HFO3 per the footprint **Figure 7**.

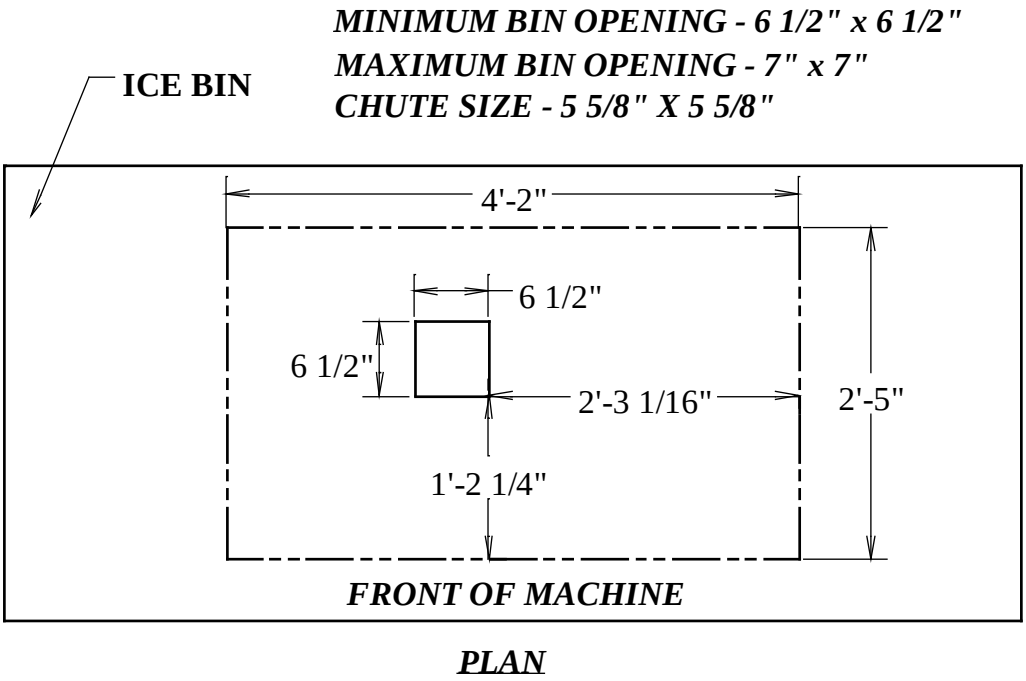

Figure 7: Ice Chute Location/Machine Footprint

Lifting Procedures

Warning: The machine weighs approximately 2,000 lb (907 kg). Use only the appropriate equipment with adequate loading capacity to move and install the machine.

FIGURES 8 & 9 illustrate two methods of lifting & setting the HFO3 machine on an ice storage bin.

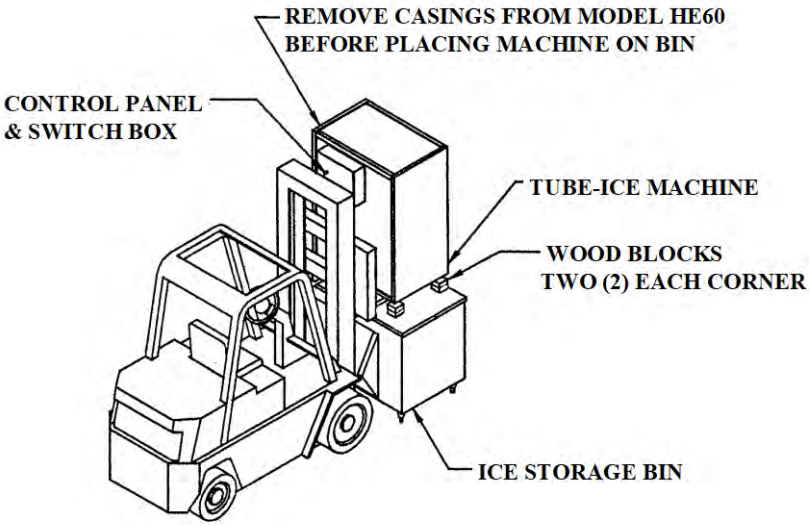

Figure 8: Forklift-&-Blocks Method

You need:

- forklift truck with adequate load and height capacities
- (8) 2X4 wood blocks 8 in. long
- (2) wooden 2X4's measuring 3-ft. long
- pry bar

Step 1. Position Tube-Ice® machine on forks.

Step 2. Stack wood blocks in each corner of the drip pan on top of the ice storage bin.

Step 3. Lift and set Tube-Ice® machine on wood blocks.

Step 4. Remove forklift.

Step 5. Stack 3-ft. long 2X4's beside drip pan, overlapping front and back of bin.

Step 6. Using a pry bar with fulcrum on 2X4's, raise the side of machine enough to remove TOP wood blocks.

CAUTION **Do not remove top AND bottom blocks at the same time.**

Step 7. Repeat steps 5 and 6 on the other side.

Step 8. With machine sitting on one (1) block under each corner, repeat steps 5, 6, and 7 remove remaining blocks. Drip pan flanges may bend slightly.

Step 9. Straighten bent drip pan flanges.

Step 10. Check the alignment of ice chute to bin opening.

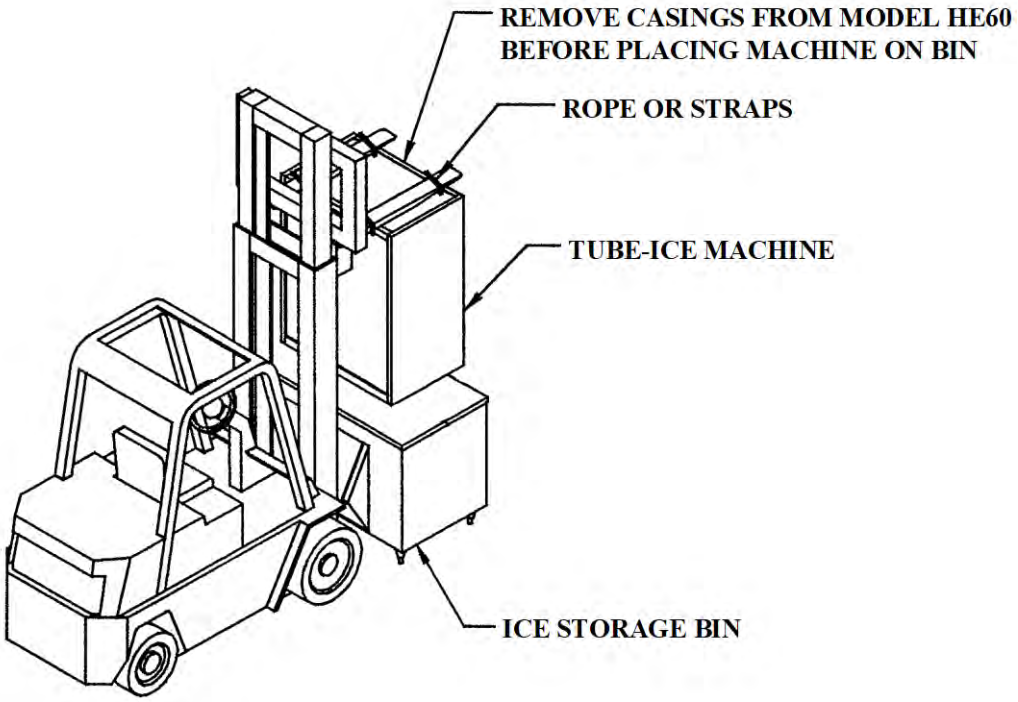

Figure 9: Forklift-&-Rope or Lifting Straps Method

You need:

- extra head room
- forklift with adequate load and height capacities
- 1/2" rope or four lifting straps to bind forks to top angles

Step 1. Remove front, rear, and top access panels (if applicable).

Step 2. Position fork truck so that forks are resting flat on top angles of Tube-Ice® machine.

Step 3. Use the rope or straps to securely bind forks to the top angles.

CAUTION **Be sure the bin is level and is set in its proper location**

Step 4. Lift Tube-Ice® machine and set into drip pan of bin.

Step 5. Remove rope or straps and fork truck.

Step 6. Check alignment of ice chute to bin opening.

Equipment Anchoring

If the machine is not installed on an ice bin, it can be secured to a supporting structure or foundation. The supporting structure or foundation should be constructed in accordance with all local and federal codes and building regulations.

Figure 10 indicates anchor bolt hole locations in the bottom frame of this Tube-Ice® machine. Consult local codes and regulations regarding seismic and wind load requirements. Additional bracing may be required.

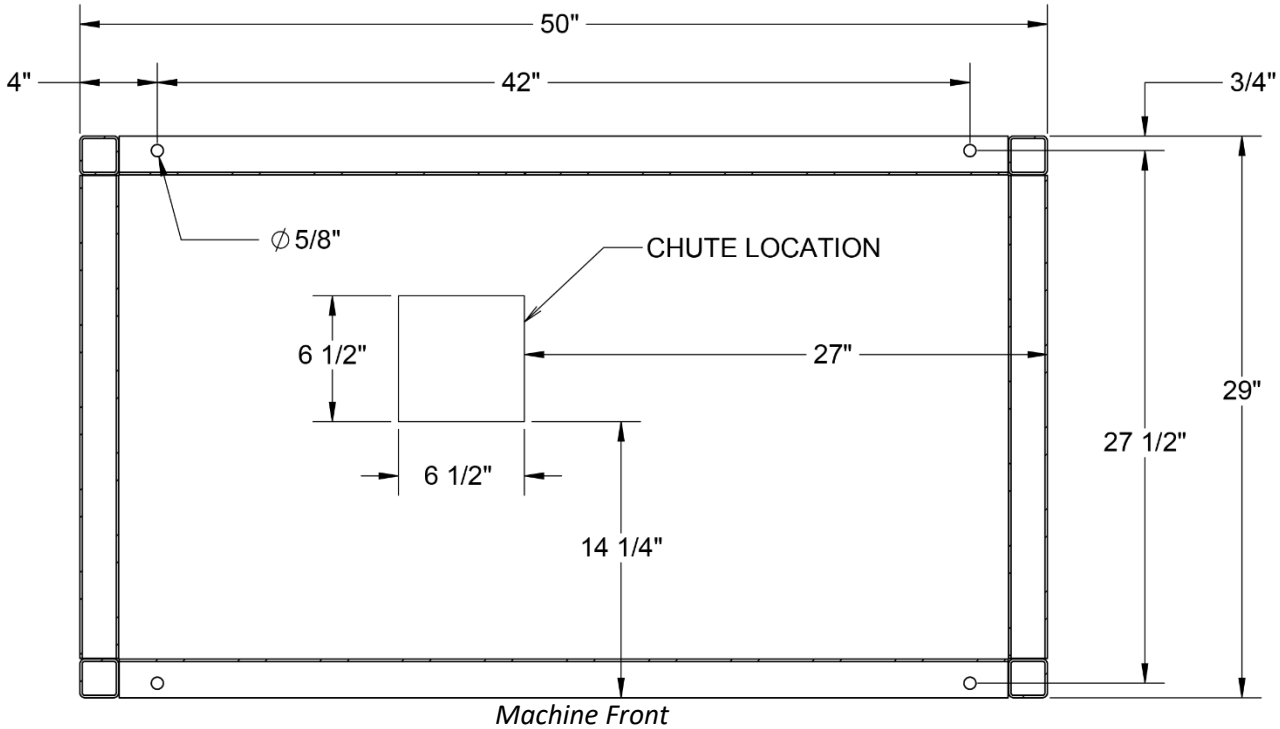

Figure 10: HFO3 Anchor Points

Piping and Drain Connections

CAUTION External shut-off valves must be installed in the water inlet lines. The minimum inlet water pressure for satisfactory operation of the machine is 30 psig (2 bar). The maximum allowable pressure is 90 psig (6.2 bar).

Figure 5 to **Error! Reference source not found.** show locations for all connections. Table 2 shows drain sizes.

Table 2: Water Supply and Drain Sizes

Makeup Water In	Water Tank Drain	Condenser Water In	Condenser Water Out
1/2 in. (DN 15) MPT	3/4 in. (DN 20) FPT	1-1/4 in. (DN 32) FPT	• 1-1/4 in. (DN 32) FPT (Non-Europe) • 1-1/4 in (DN 32) BSPP (Europe)

The condenser water outlet and water tank drain connections must be extended to an open drain or sump, arranged for visible discharge. Do not allow water to be trapped in the water tank drain line, because this will interfere with the operation of the automatic blowdown system.

CAUTION Do not connect these lines into a pressure-tight common header because warm condenser water may back up into the water tank. The condenser water outlet must be piped separately to the drain. Due to variations in water quality by geographic location, water filtering or treatment may be required to reduce maintenance and inhibit hardness buildup on machine components, such as freezer tubes and water valves.

Water-Cooled Condenser Connections (Water-Cooled Machines Only)

The water regulating valve is not installed on the condenser when it is shipped from the factory. Install the regulating valve on the condenser water inlet connection (bottom connection on condenser). Connect the condenser water outlet line to the top connection on the condenser.

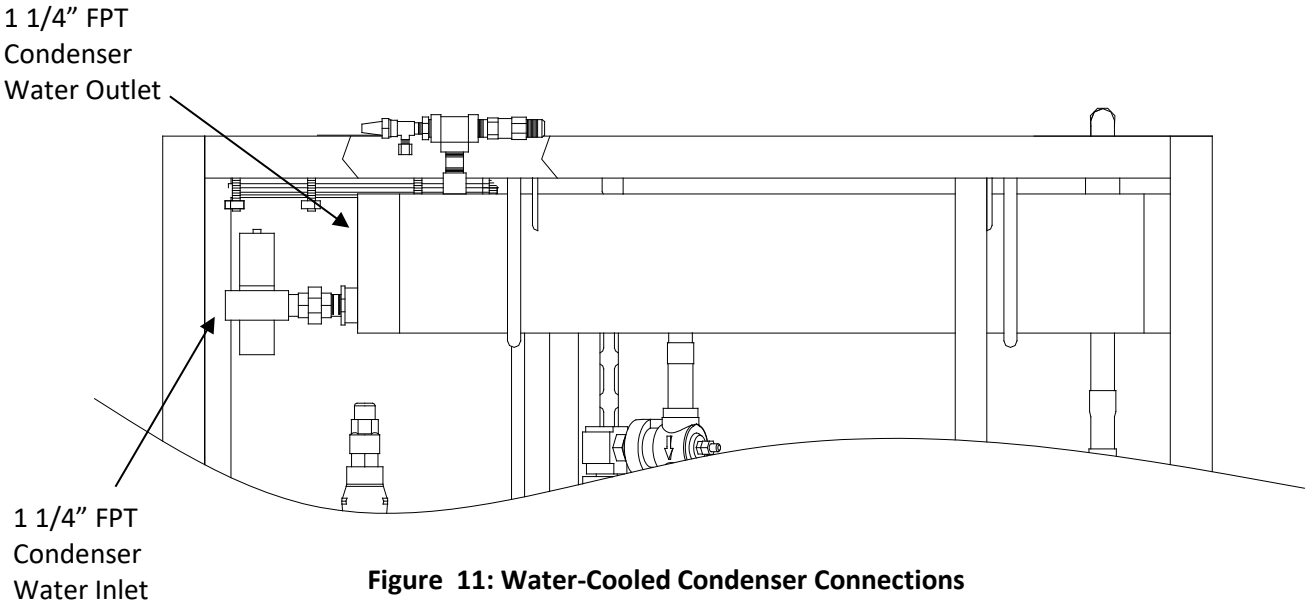

Figure 11: Water-Cooled Condenser Connections

Cooling Tower (Water-Cooled Machines Only)

When selecting a cooling tower, pay careful attention to operating wet bulb conditions. Check with your local cooling tower distributor for their recommendations based on actual operating conditions in your area. An average wet bulb temperature of 78°F (25°C) is typical in the United States, but many localities have design wet bulb temperatures as low as 72°F (22°C) or as high as 82°F (28°C).

The cooling tower water pump must be capable of delivering the required volume of water through the condenser. The pump must be sized for each installation, which depends on cooling tower location, pressure drop through water lines, and water regulating valves. The water piping for the cooling tower and the installation of the pump must be in accordance with the manufacturer’s instructions.

Proper water treatment for the prevention of mineral and foreign matter accumulation in the condenser or cooling tower is recommended. A water analysis by an independent laboratory should be completed to determine the proper chemicals to use.

Pressure Relief Valves

Pressure relief valves are included with this Tube-Ice® machine. One is located on the freezer (low-side), one is located on the top of the condenser (high-side), and a third is located on the top of the receiver (high-side). These valves are designed to vent in emergency conditions. This ensures that the vessel internal pressure does not exceed the maximum allowable pressures as stated on the vessel nameplates.

Vent each of the pressure relief valves to a safe outdoor location away from people and building openings in accordance with local and national codes.

Warning: Pressure relief valves must be replaced after five years of service. Before replacing relief valves, review requirements per current local and national codes. Valve replacement should be performed only by service personnel experienced and certified in refrigeration and qualified to work with high-voltage electrical equipment. If a relief valve discharges, the valve must be replaced before putting the machine back into service.

Relief valves do not properly reseat after a discharge event. Contact Vogt SuperCare Customer Service at 1-502-635-3000 or 1-800-853-8648 for replacement valves.

Wiring and Electrical Connections

Warning: Only service personnel experienced and certified in refrigeration and qualified to work with high-voltage electrical equipment are allowed to install or work on this Tube-Ice® machine.

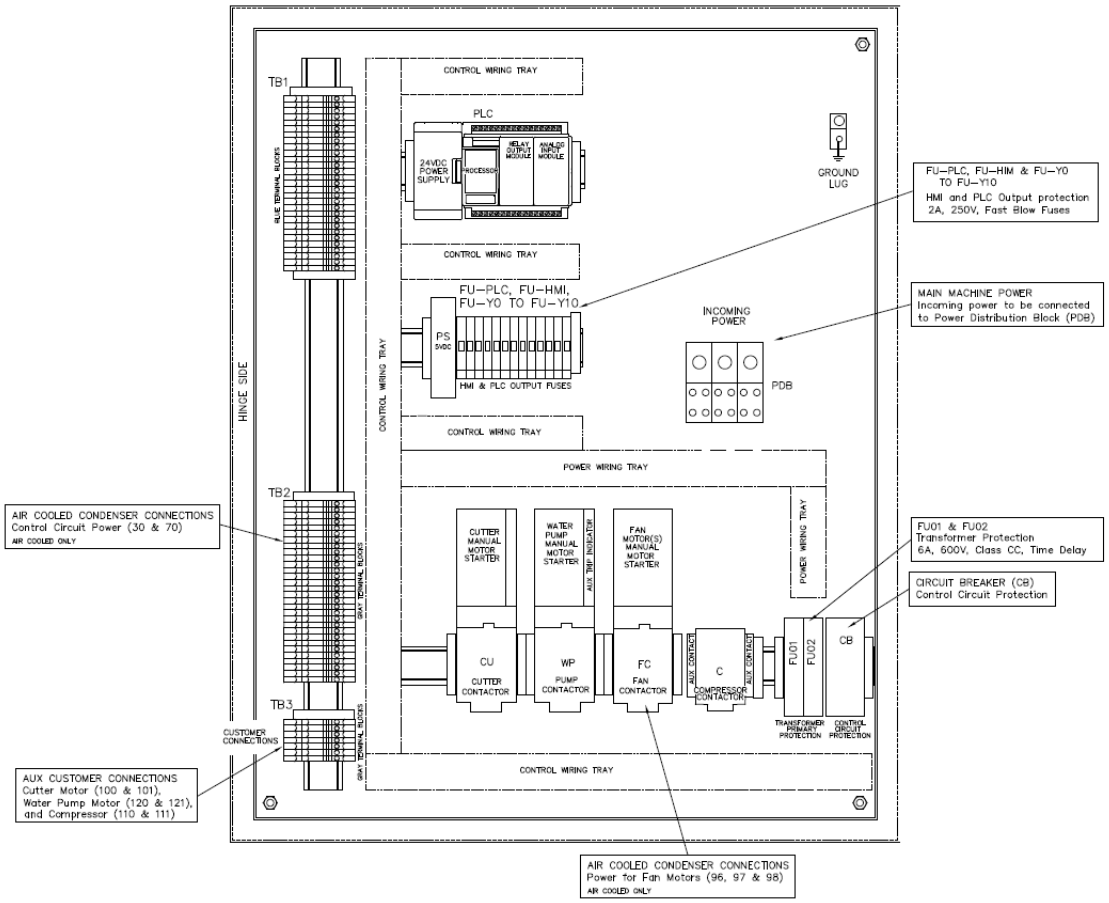

Figure 12: Control Panel Power Connections (60 Hz)

Table 3 shows how to properly size wiring connections. A fused disconnect must be provided near the Tube-Ice® machine. Connect three-phase power to Terminals L1, L2, and L3 on the power distribution block (PDB) for operation of the Tube-Ice® machine and its controls. Rotation checking of cutter motor and water pump is required. Also, if one leg of the three-phase power is higher or lower, then it should be connected to Terminal L2. Connect the ground wire to the provided ground lug (not shown).

Standard Voltages	Water-Cooled		
	Full Load Amperage	Min. Ampacity	Max. Fuse
208/230V, 3ph, 60 Hz	48.4	57.4	100
460V, 3ph, 60 Hz	23.7	28.7	50
220V, 3ph, 50 Hz	N/A	N/A	N/A
400V, 3ph, 50 Hz	31.2	36.2	60

Table 3: Electrical Specifications

Phase Check

CAUTION Do not attempt to start the machine without priming the water pump and insuring proper rotation of both the cutter motor and pump motor.

Cutter and pump motor rotation are synchronized at the factory but must be checked at installation. For ice production, the cutter disc, as viewed at the ice discharge opening, should turn from left to right. The pump rotation should match the marking on the pump housing. The pump must be primed by starting the machine in Clean mode and allowing it to run for several minutes. To change the direction of rotation for the motors, disconnect the power and reverse L1 and L3 (incoming power wires) at the motor contactor in the control panel.

Voltage Imbalance

Voltage imbalance can cause motors to overheat and fail. Voltage imbalance between any two legs should be no greater than 2%.

Example: Supply voltage = 230V – 3-Phase – 60 Hz

Voltage Readings:

A-B = 220 Volts
B-C = 225 Volts
A-C = 227 Volts
} Average = 224 Volts

(A-B) 224-220 = 4 Volts (Highest Deviation)

(B-C) 225-224 = 1 Volt

(A-C) 227-224 = 3 Volts

% Voltage Imbalance = 100 x (4/224) = 1.78% "Acceptable"

CAUTION Contact your local electric utility company if the supply voltage phase imbalance is >2%.

Current Imbalance

Voltage imbalance causes a current imbalance, but a current imbalance does not necessarily mean that a voltage imbalance exists. A loose terminal connection or a buildup of dirt or carbon on one set of contacts would cause a higher resistance on that leg than on the other two legs. Current follows the path of least resistance; therefore, if Terminal L1 is loose or dirty, L2 and/or L3 will have higher current.

Higher current causes more heat to be generated in the motor windings. The maximum acceptable current imbalance is 10%.

Example:

Current Readings:		(L1) 96-95 = 1 Amp
L1 = 96 Amps		(L2) 95-91 = 4 Amps (Highest Deviation)
L2 = 91 Amps	Average = 95 Amps	(L3) 98-95 = 3 Amps
L3 = 98 Amps		% Current Imbalance = 100 x (4/95) = 4.2% "Acceptable"

Air-Cooled Condenser Installation Instructions

! WARNING !
These installation guidelines must be followed to obtain reliable operation from air-cooled ice machines. If these guidelines are not followed, the compressor warranty will not be honored.
! WARNING !

1. Use only Vogt approved condensers. Any exceptions to this policy must be obtained in writing prior to installation and operation of the ice machine.

2. Outdoor condensers **must** be installed with vertical airflow. Indoor condensers used for heat recovery may be installed with either horizontal or vertical airflow.

3. The condenser **must** be mounted above the ice machine, with liquid refrigerant from the condenser outlet draining freely (1/4" per foot slope) in the direction of normal operating flow (back to the ice machine) with no traps in the liquid line.

4. Flooding head pressure controls such as Alco Headmaster are **not** to be used, since they cause excessive sub cooling of the returned liquid refrigerant and interfere with reliable ice harvest.

5. The discharge and liquid lines must be insulated with 1/2" thick Armaflex insulation or equal.

6. **Horizontal runs in the discharge** line should slope 1/4" per foot in the normal direction of flow (away from the ice machine).

7. Traps must be installed in discharge lines at the base of all vertical risers. There should be no intentional traps in liquid lines. Trap volume should be kept to a minimum. Typical details are shown in **FIGURE-15**. Long vertical runs should have traps every 20 feet.

8. Use only ACR grade copper pipe, Type L. Recommended line sizes are shown in **TABLE-4.**

9. Distance between ice machine and condenser must not exceed 150 equivalent feet. Refer to Condenser Equivalent Line Size worksheet. **(see TABLE-6)**

10. Condensers must be provided with a cold weather valve kit per **FIGURE-13**. These valves allow one-half of the condensers to be disabled in cold weather. Running the ice machine with one half the condenser in cold weather makes it easier to maintain minimum necessary condensing pressure, particularly in windy conditions. The coil thermostat should be set to close at 35°F for multiple fan condensers or 50°F for single fan condensers.

11. Condensers with multiple fans must be provided with a thermostat to turn off unneeded fans in cold weather. Turning off unneeded fans reduces on-off cycling of the fan(s) and allows for a steadier condensing pressure. The fan thermostat should be set at 50°F.

12. When extreme cold conditions are expected or encountered (temperatures below 0°F and wind greater than 15 MPH), it may be necessary to install a protective enclosure around the condenser. Other apparatuses such as louvers may be used. Contact the factory for suggestions.

13. After installation, the field-installed lines are to be evacuated to a vacuum of 500 microns or less and held for at least one hour. Use ¼" access connection located on compressor discharge line and liquid return line (32). After the vacuum pump is removed, vacuum should hold at 500 microns or less for at least 5 minutes and the lines pressurized with refrigerant to 25-psig minimum.
14. The volume of refrigerant supplied with the machine is sufficient to fill the condenser and condenser lines when length of pipe (one way) is 75 feet or less. When the length of lines is longer than 75 feet, additional refrigerant must be added as noted below. Instructions for adding refrigerant are included further in these instructions.

Liquid Line Size	75 ft.	100 ft.	125 ft.	150 ft.
1/2"	none	None	None	2
5/8"	none	2	4	6
7/8"	none	4	8	12
1-1/8"	none	6	12	18

TABLE - 4

Pounds Refrigerant to Add Vs. Liquid Line Length

15. All piping must be done in accordance with applicable local and national codes. Such codes may include "The Safety Code for Mechanical Refrigeration (ANSI B9.1), and "The Code for Refrigerant Piping" (ANSI B31.5).

16. The following installation guidelines are strongly suggested. While they do not affect the machine warranty, they may be required for safe operation, and to comply with all applicable electrical and mechanical codes.

17. Local electrical code must be checked for wiring method.

18. The installer must provide a lockable disconnect switch(s) adjacent to the condenser. The power is fused at the machine by a 15-amp breaker.

19. Electrical connections between the condenser and the Tube-Ice® machine require minimum 12 ga. wires. See **FIGURE-17.**

20. All electrical fittings and components exposed to the weather must be suitable for outdoor installation.

The design total heat rejection for each Tube-Ice® machine, the recommended air-cooled condenser, and condenser physical and electrical data are shown in **TABLE-5**. Only the condensers shown are UL listed with the ice machines. Other condensers may be individually UL listed, but are not UL listed with the Tube-Ice machines, and cannot be recommended by Vogt Tube-Ice. Catalog energy efficiency ratings of the ice machines are based on use of the recommended condenser.

Condensers supplied by Vogt must be utilized. The use of non-Vogt condensers will void the compressor warranty. For continuous operation at ambient above 105°F, consult the factory about using a larger condenser.

Ice Machine Model	HE30	HE40	HFO3	HFO5
Recommended Condenser	DVT008 (DVT012)	DVT012 (DVT016)	BNHS02A011 (BNHS02A011(12))	BNHS02A017 (BNHS03A026)
Note: For continuous operation at ambient above 95 °F, use larger condenser shown in parenthesis				
Total Heat Rejection:				
BTU/hr at 60 Hz. (15°F TD)	58,800	117,500	157,500 (172,500)	232,000
BTU/hr at 50 Hz.	54,100	108,100	144,900 (159,700)	
Fans:				
Number	1 (2)	2	2	2 (3)
HP, Each	1/2	1/2	1.5	1.5
Total, CFM	6,450 (12,400)	12,400 (12,900)	20,500	19,000 (28500)
Full Load Amps:				
1 ph., 208/230V, 60 Hz	3.9 (7.8)	7.8 (7.8)	N/A	N/A
3 ph., 208/230V, 60 Hz	N/A	N/A	14.0	14 (21)
3 ph., 460V, 60 Hz	1.3 (2.6)	2.6 (2.6)	7	7 (10.5)
1 ph., 200/220V, 50 Hz	3.9 (7.8)	7.8 (7.8)	N/A	N/A
3 ph., 200/220V, 50 Hz	N/A	N/A	14.0	14 (21)
3 ph., 400V, 50 Hz	1.3 (2.6)	2.6 (2.6)	7	7 (10.5)
Weight, lbs.:				
Net	260 (470)	470 (530)	580 (585)	1210
Shipping	390 (520)	520 (680)	760 (765)	1520
Operating (maximum flooded)	285 (500)	500 (560)	610 (615)	1265
Condenser dimensions, inches:				
A (Width)	43”	43”	45.46”	45.46”
B (Length)	49.75” (69.75”)	69.75”	127”	233.16”
C (Height)	40” (60”)	60”	49.15”	49.15”
D (Leg centerline)	17” - 3	17” - 3	38”	38”
E (Leg centerline)	40” (60”)	60”	106.15”	*106.15” (3)
F (Clearance below)	24.5”	24.5”	20.5”	20.5”
Recommended Line Sizes, OD:				
Liquid (All lengths & orientations)	5/8”	7/8”	7/8”	1-3/8”
Discharge Gas				
Vertical Up, All lengths	7/8”	1-1/8”	1-1/8”	1-5/8”
Horizontal Or Down, < 75 ft.	7/8”	1-1/8”	1-1/8”	1-5/8”
Horizontal Or Down, > 75 ft.	1-1/8”	1-3/8”	1-3/8”	2-1/8”
Connections at Condenser:				
Liquid (ODC)	7/8”	7/8” (1-1/8”)	1-1/8”	1-3/8”
Discharge Gas (ODC)	1 1/8”	1-1/8” (1-3/8”)	1-3/8”	2-1/8”
Connections at Machine				
Liquid (ODC)	1-1/8”	1-1/8”	1-1/8”	1-1/8” (1-1/4”-12)
Discharge Gas (ODC)	1-1/8”	1-1/8”	1-1/8”	1-3/8” (1-3/4”-12)

TABLE – 5 Air-Cooled Condenser Data

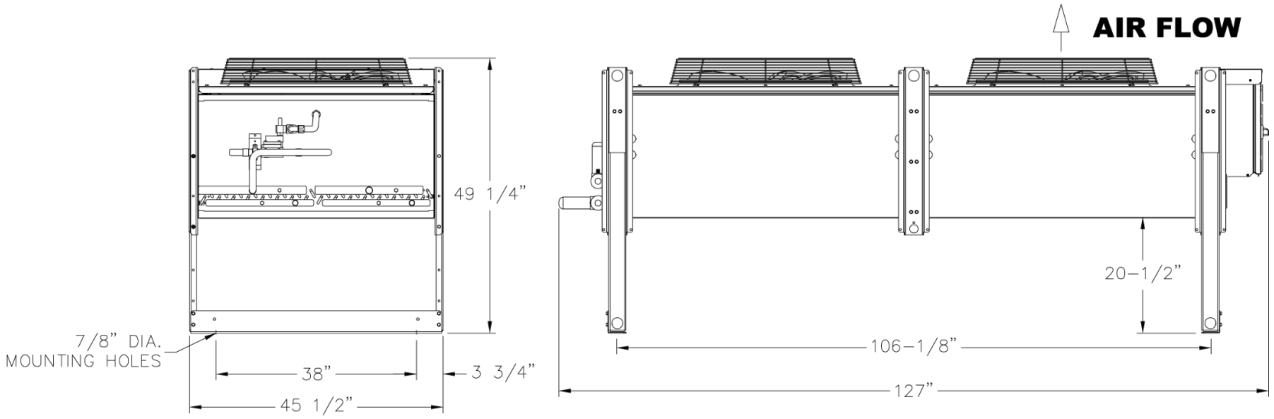

FIGURE – 13
Condenser Dimension

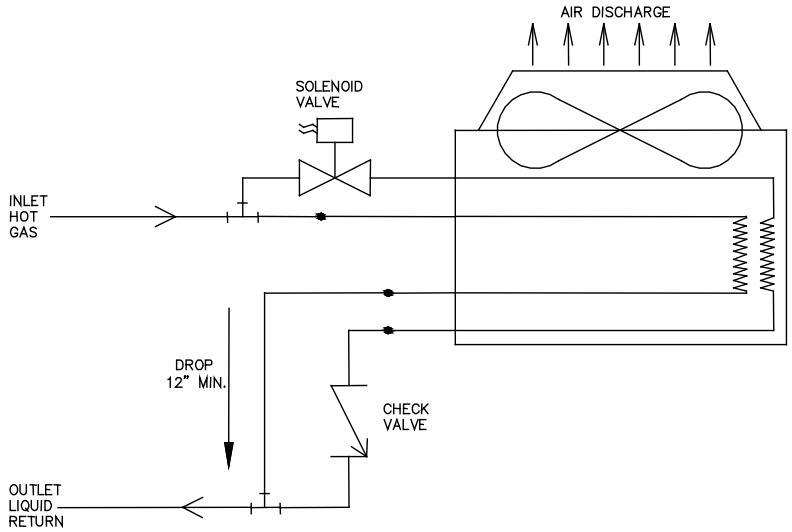

Note: Dash lines indicate customer supplied piping. The Check Valve in the return line (labeled "Output Liquid Return Line") is supplied with the condenser.

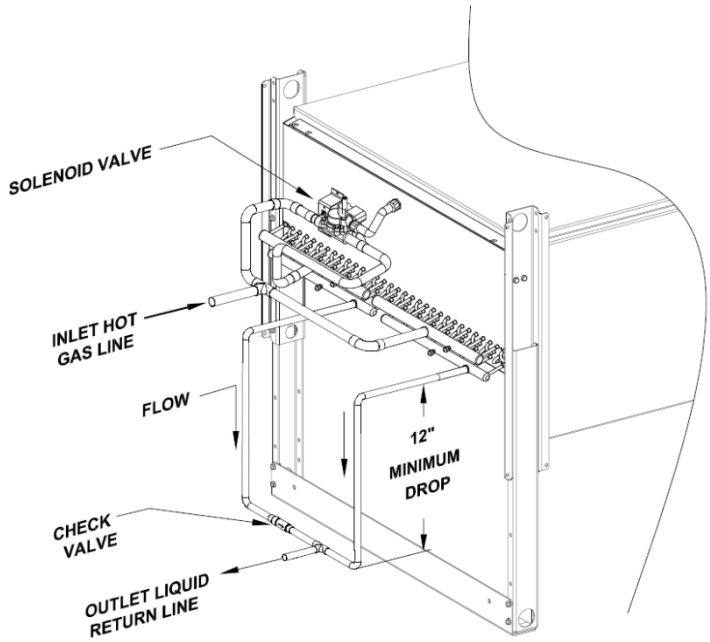

FIGURE – 14
Condenser Field Piping / 50-50 Coil Spli

CONDENSER EQUIVALENT LINE SIZE WORKSHEET

Discharge Gas Line O.D. _____

Fitting Type	Number Used	Factor	Total
Globe Valve (open)			
Angle Valve (open)			
45° Elbow			
90° Elbow			
Tee (90° turn through)			
Tee (90° straight through)			

Feet of Straight Copper Used	
Total Fitting Factor	
Total Equivalent Feet	

Fitting Factors

Copper Tube O.D. Type "L"	1/2"	5/8"	7/8"	1 1/8"	1 3/8"	1 5/8"	2 1/8"
Globe Valve (open)	14	16	22	28	36	42	57
Angle Valve (open)	7	9	12	15	18	21	28
45° Elbow	.5	1	1	1.5	2	2	2.5
90° Elbow	1	2	2	3	4	4	5
Tee (90° turn through)	3	4	5	6	8	9	12
Tee (90° straight through)	.75	1	1.5	2	2.5	2.8	3.5

TABLE – 6

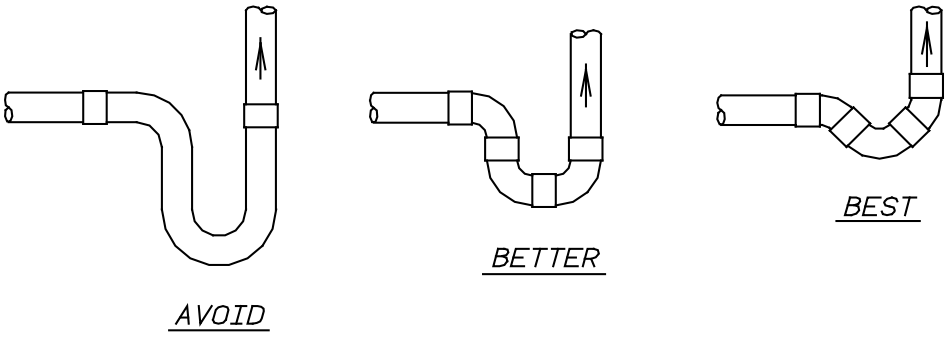

FIGURE - 15 Minimum Traps for Discharge Lines

Refrigerant Connections to Air-Cooled Condenser

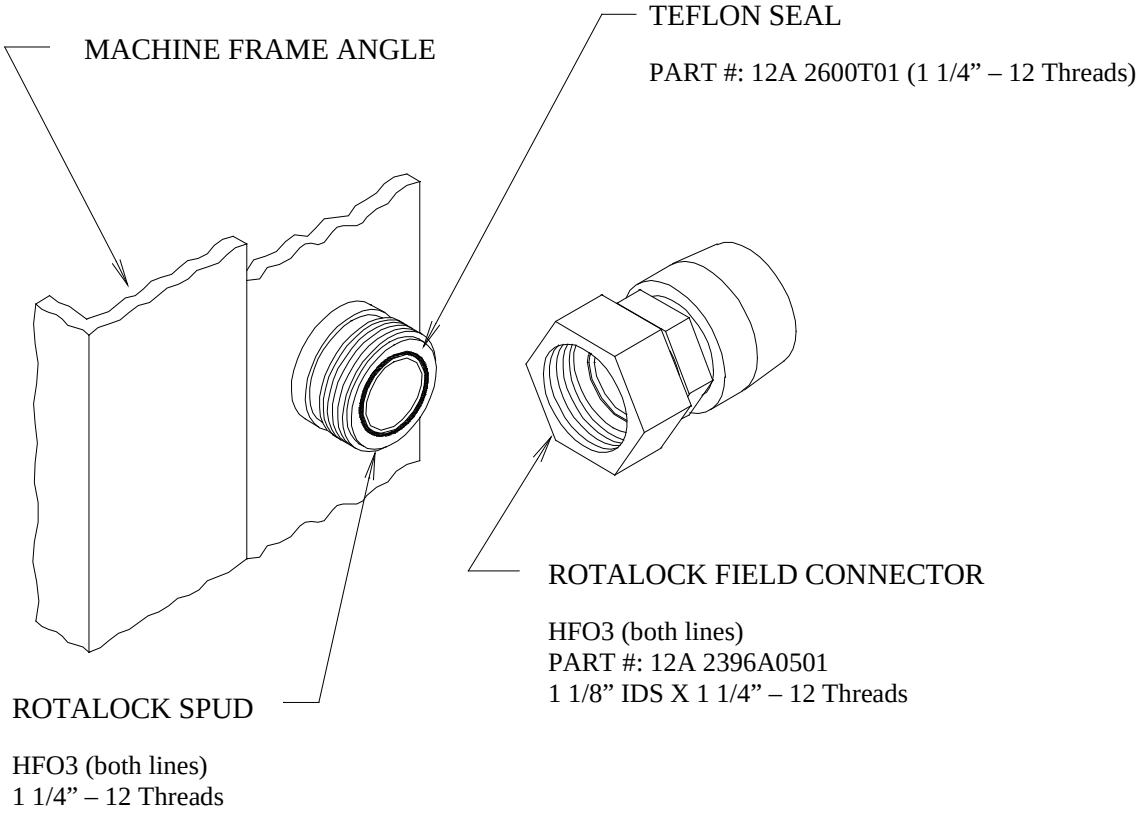

FIGURE - 16
Field Attachment, Air Cooled Condenser Refrigerant Tubing

FOLLOW THESE PROCEDURES TO MAKE A TIGHT JOINT

1. Solder or braze condenser-tubing ends to the female Rotalock connectors.
2. Remove dust caps if used, making sure that component plastic seals are intact.
3. Wipe off connector and spud-threaded surfaces with a clean cloth to prevent the inclusion of dirt, or any foreign material in the system.
4. Connector coupling nut should be screwed onto Rotalock spud using the proper amount of torque (See TABLE-7).

Spud Size	Amount of Torque
1/2" – 5/8"	30-40 FT LBS
7/8"	50-60 FT LBS
1 1/8"	80-100 FT LBS

TABLE – 7 Torque Ratings

Wiring Connections to Air-Cooled Condenser.

HFO3 and HFO5 air-cooled condensers will be wired to the ice machines terminal block and condenser fan motor starter. Wire #'s 11 & 22 to the terminal block and B7, B8 & B9 to the motor starter.

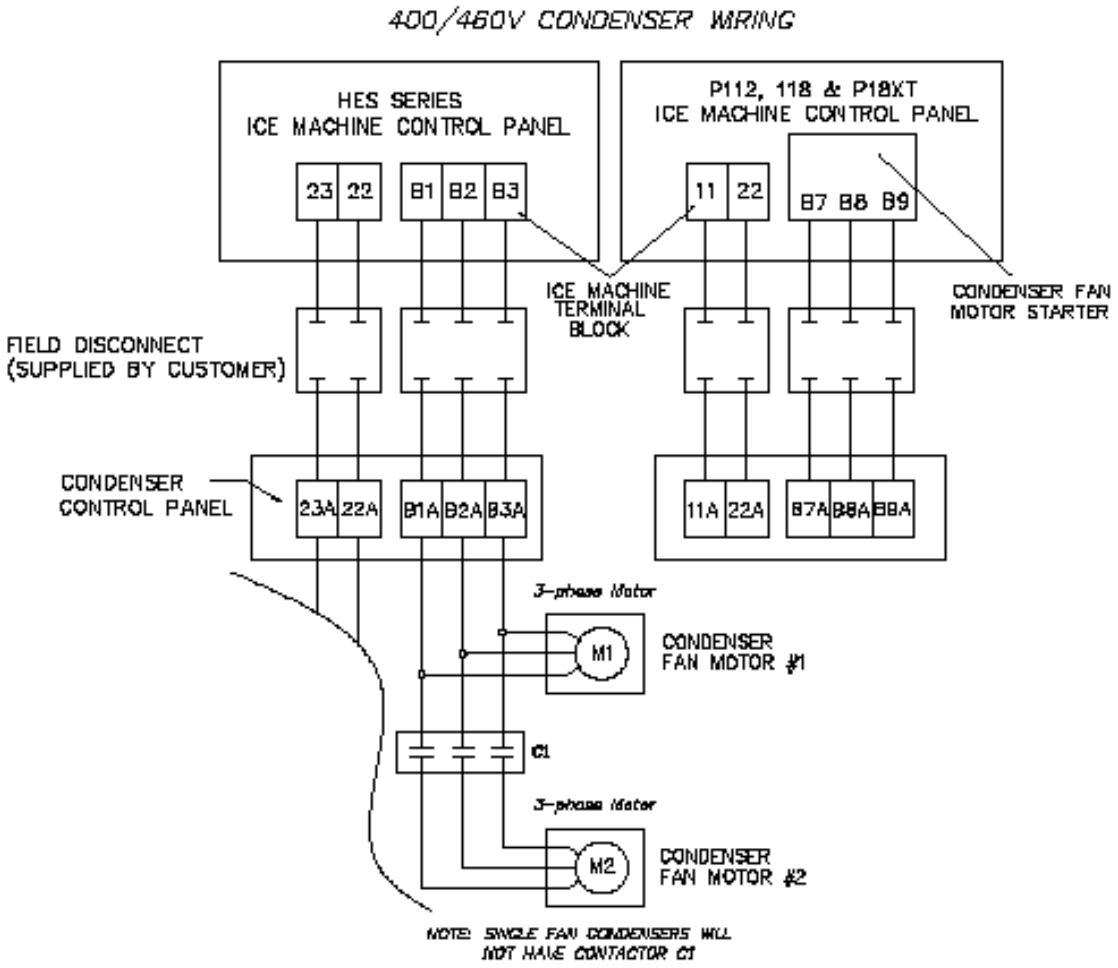

FIGURE – 17
400/460V, 3-phase Condenser Wiring

Wiring Connections to Air-Cooled Condenser (Cont.)

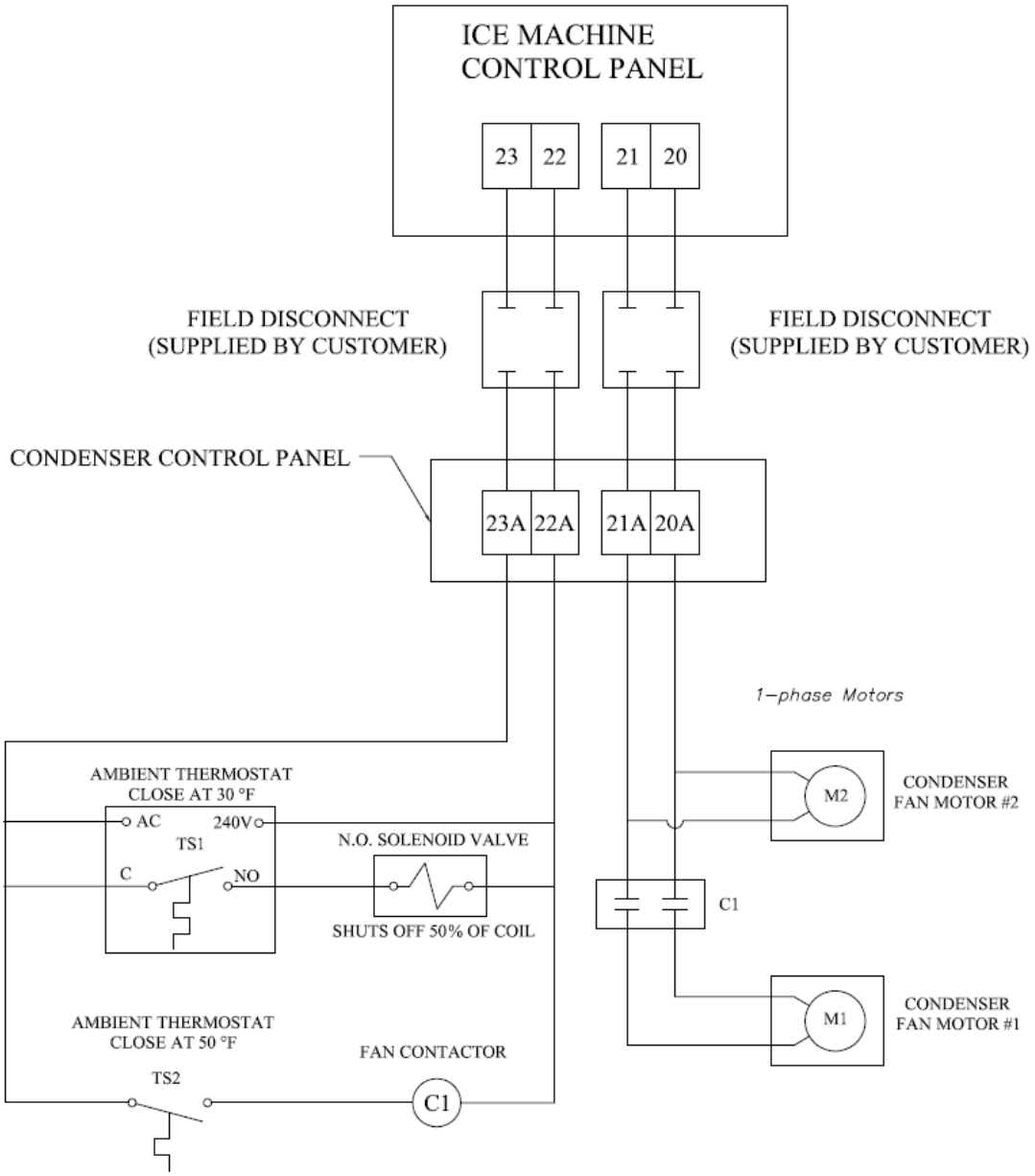

FIGURE – 18
Wiring For BOHN DVT012 /DVT016 with Cold Weather Valve and Two Fan, 50/50 Condenser Split (200/208/230V)

Ice

Bin Thermostat Sensor

An electronic thermostat, a standard feature on every HFO3 machine, automates the machine's various cycles.

To ensure proper protection for the machine or auxiliary equipment, the thermostat's sensor must be positioned so that the ice will contact it when the bin is full. The distance between the top of the ice bin and the sensor must allow space for the machine to make an additional discharge of ice after the ice contacts the sensor.

Note: The sensor should also be mounted on the back side of the bracket, opposite of the front of the bin to reduce the possibility of damage from ice removal equipment.

The control panel is electrically connected so that the ice bin thermostat will stop the machine only upon the completion of a harvest period (freezer is empty of any ice).

Note: Actual location of the sensor will vary based on bin layout and ice distribution system.

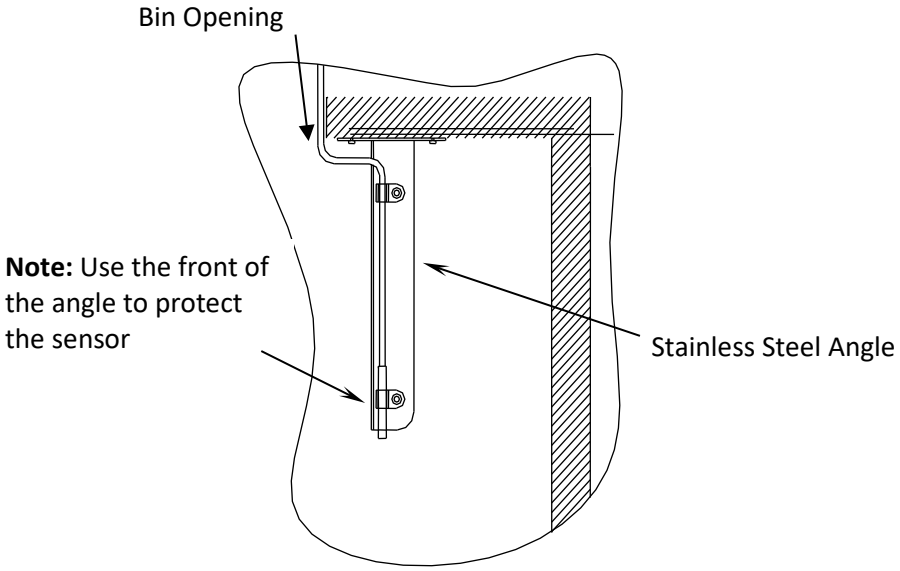

Figure 9: Typical Bin Sensor Mounting Bracket

Programming the Electronic Bin Thermostat

The electronic bin thermostat has an LCD readout that displays the temperature in the bin at the sensor. **The control has been preset and locked out at the factory to shut the machine down at 38°F and to re-start at 40°F.** The control retains the program even if power is cut to the machine. Under special conditions, the settings may need to be changed. The lockout switch is located on the inside of the control. Removal of the four screws on the face of the control will reveal the lock-switch.

Follow the instructions below to reset the switch.

1. Press the "SET" button to enter the sensors setup mode
2. Select between "C"- Celsius and "F" - Fahrenheit
   Use the up ↑ or down ↓ key to select "F"
3. Press the "SET" button to set the Set point (S1 will be blinking)
   Use the up ↑ or down ↓ key to set the temperature at 38°F
4. Press the "SET" button to set the Differential (DIF 1 will be blinking)
   Use the up ↑ or down ↓ key to set the differential at 2°F
5. Select between "C1"- Cooling mode and "H1" - Heating mode
   Use the up ↑ or down ↓ key to select "C1"

Machine will shut off when temperature drops to 38˚F and come on when temperature reaches 40˚F.

Note: The sensor will automatically exit the programming mode if no keys are depressed for a period of thirty seconds. Any settings that have been input to the control will be accepted at that point.

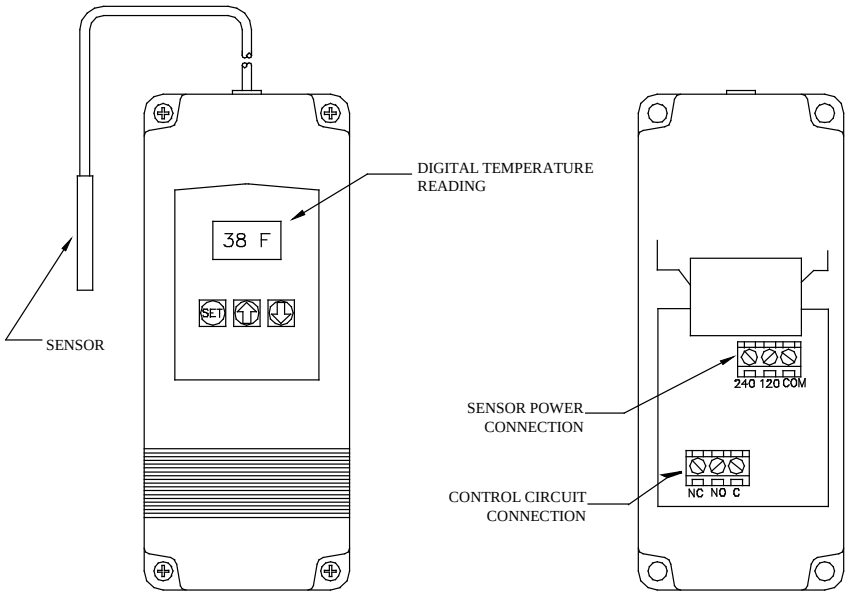

FIGURE 20: Electronic Thermostat

Note: If damaged, the sensor can be replaced without replacing entire unit. Replacement sensor part #12A2117G0901. Electronic temperature control part #12A2117G09.

Sensor cable can be extended up to 400 feet. For more information, consult Tube-Ice® Technical Service Department.

Installation Checklist

Complete a visual check of the following before continuing or opening any valves:

- ☐ Check all joints for leaks that may have developed during shipment.
  Note: The machine was shipped in a pumped down state, but a small positive pressure should remain in the freezer (20–25 psig [1.4–1.7 bar]). Verify with the freezer pressure gauge.
- ☐ All refrigerant piping, water supply, and drain connections properly conform to the requirements in this manual and are properly connected to inlets and outlets.
- ☐ The electrical supply is properly sized for fuses and for compliance to local and national codes. Refer to the machine nameplate for minimum circuit ampacity and maximum fuse size.
- ☐ All field-installed equipment (augers, conveyors, cooling towers, bin level controls, etc.) is properly installed.
- ☐ The applicable portion of the **Warranty Registration/Start-Up Form** has been completed and sent back to Vogt Ice.
- ☐ Check the oil level of the cutter gear reducer.
- ☐ The water distributors at the top of the freezer should be in position and fit snugly against the tube sheet face.

CAUTION The compressor crankcase heater should be energized for a minimum of two hours, and the oil temperature should be 100°F–110°F (38°C–43°C) before attempting to start the compressor.

Start-Up, Shutdown, and Operation

Start-Up Checklist

Warning: Only service personnel experienced and certified in refrigeration and qualified to work with high-voltage electrical equipment should be allowed to install or work on this Tube-Ice® machine.

Make sure all of the following items have been checked before starting the machine for the first time:

- ☐ Check that the water inlet connections are attached properly. The water inlet shutoff valves for the condenser and the water tank should be open. The water level in the water tank should be at a height where the makeup water float valve will be closed when the machine is idle.
- ☐ Make sure the cutter motor gear reducer is lubricated.
- ☐ Check that the compressor crankcase oil level is at the proper height as indicated by the compressor body sight glass.
- ☐ Open all necessary valves, including:
    - Compressor service valves
    - Thawing gas-line stop valve
    - King valve
- ☐ Except the charging valves, check that all stop valves in the refrigerant system are open, according to the attached tags. All valves are tagged with instructions.
- ☐ Immediately after opening the refrigerant valves, check the entire machine for refrigerant leaks with an electronic leak detector or by doing a bubble test.
- ☐ Check that all water supply lines are open to the water tank and all water tank drain valves are closed.
- ☐ Set the **Ice/Off/Clean** switch to the **Ice** position.
- ☐ Close the exterior disconnect switch to energize the crankcase heater, and check supply voltage against that on motor nameplate for compliance before switching on disconnect.

Start-Up Procedure (Initial Start-Up)

Note: The machine will start in harvest mode when set to **Ice**. If the pump is already primed, skip to Step 4.

To perform the start-up of the machine, follow the steps below:

1. Press the **Run Water Pump** touch screen button on the HMI to start the water pump.
2. The pump can be stopped and started by pushing **Run Water Pump** touch screen button. The water should be circulated for a minimum of 5 minutes to prime the pump, purge the tubing of air, and lubricate the cutter bearing. By default, the pump will run for 10 minutes and shut off.
3. When there is good water flow, press the **Ice** touch screen button. The screen will change and show the **Start** touch screen button. Pressing the **Start** touch screen button will start the machine in a harvest (thaw) period with the compressor running.
4. At the termination of the harvest (thaw) period, the machine will begin the freeze period.
5. Be sure to observe a minimum of 4 cycles of ice production to confirm the satisfactory operation of the machine (approximate time for 4 cycles is about 200 minutes).
6. Complete the remaining part of the **Warranty Registration/Start-Up Report** upon initial machine start-up and return it to Vogt Ice, LLC.

Shutdown Procedure

CAUTION The red **E-Stop** button should only be used for emergency shutdown.

For normal shutdown, use the **Off** touch screen button on the HMI and follow the steps below:

1. Press the **Off** touch screen button. Do not use the machine disconnect or the red **E-Stop** to stop the machine. If the disconnect is used, the crankcase heater is de-energized, and liquid refrigerant migrates to the compressor.
2. During a freeze period, the machine will continue to run.
3. At the completion of the freeze period, the machine will harvest and stop. The completion of a cycle (1 freeze plus 1 harvest) ensures that all ice is removed from the freezer to prevent refreeze when the machine is restarted. Before turning off, the machine will perform a partial pumpdown.
4. During a harvest period, the machine will complete the harvest, perform a partial pumpdown, and stop.

Start-Up and Shutdown Tips

- If the operation of your machine is not controlled by a timer, bin level control, or some other mechanism to automatically start and stop ice production, you should use only the touch screen HMI to start and stop the machine.
- By pressing the **Off** touch screen button, the machine will stop after the next harvest period. It will perform a partial pumpdown before turning off.
- Do not use the **E-Stop** button or the machine disconnect for normal shutdown of the machine.
- Disconnect the machine only in an emergency or for safety when performing certain service or repairs to the machine. The compressor crankcase heater is de-energized when the machine is shut down.
- The **Manual Harvest** touch screen button can be used to initiate a harvest period. When it is pushed during a freeze period, it will immediately initiate a harvest period.

Ice Quality

Your HFO3 has been set up at the factory to produce the finest Tube-Ice® possible. The ice produced in the freezer should have a small hole in the middle of each tube to avoid permanently damaging the freezer. **Table 8** shows recommended hole sizes for determining ice quality.

Table 8: Average Hole Size in Tube-Ice®

Tube Size in. (mm)	1 (25)	1-1/4 (32)
Hole Size in. (mm)	1/16–1/8 (1.6–3.2)	1/8–3/16 (3.2–4.8)

Adding Refrigerant

CAUTION Be sure to follow all local and federal regulations regarding the handling of refrigerants and their illegal emission into the atmosphere.

Check the refrigerant level after the machine has operated for a few cycles. It should be slightly above the minimum operating level, as indicated on the label on the receiver, a few minutes before the start of a thawing period.

If the level is low at this time, sufficient refrigerant should be added to the system to raise the level above this point.

Note: Refrigerant can only be added during the freeze period.

Add no more than 10 lb. (4.5 kg) of refrigerant and allow the machine to operate for several cycles before checking the level again.

It is also possible to check the refrigerant level by pumping down the machine (Refer to *Pumpdown*). When the machine is pumped down, some liquid should be observed in the receiver's sight glass.

Refrigerant must be added in liquid form through the machine's charging valve. No air or other non-condensable gases should enter the system when filling the machine with refrigerant. The compressor crankcase heater must be energized for a minimum of two hours before starting and running the compressor.

While the machine is running, add refrigerant according to the steps below:

1. Connect the charging valve on the machine to the refrigerant cylinder using a hose or pipe suitable for R513A service. Refer to the instruction card attached to the refrigerant cylinder.
2. Open the valve on the refrigerant cylinder and purge air out of the charging line at the charging valve connection.
3. Open the charging valve on the machine.
4. The charging valve must be closed when the freezer is in a harvest period.

DANGER Immediately close the machine charging valve at the start of the harvest period if a refrigerant cylinder is connected. Never leave a refrigerant cylinder connected to the system except during charging operations. Failure to observe either of these precautions can result in transferring refrigerant from the system into the refrigerant cylinder, causing it to overfill and possibly rupture as the liquid refrigerant expands.

Electrical Controls and Their Functions

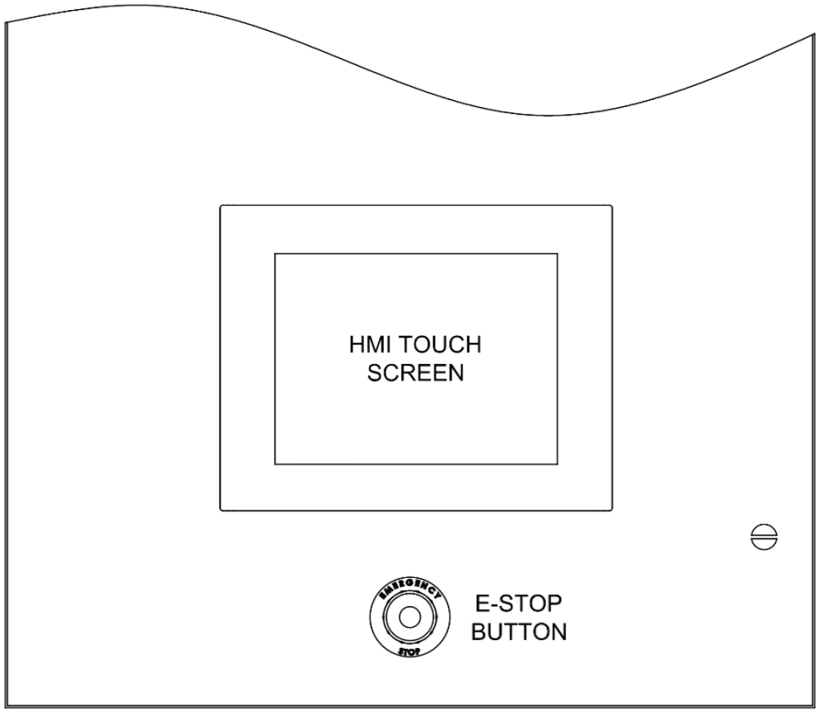

Figure 21: Control Panel (Exterior View)

This machine includes an Allen Bradley PLC with touch screen HMI. All machine control functions like the freezer pressure setting (FPS), the low-pressure safety, the high-pressure safety, the defrost pressure switch (DPS), and the condenser pressure switch (CPS), among others, are handled through pressure transducers and the touch screen.

Note: If damaged, the bin sensor can be replaced without replacing the entire unit. The sensor cable can be extended up to 500 feet (150 m) if using a 16 American wire gauge (AWG) wire. For more information, contact Vogt SuperCare Customer Service.

CAUTION To provide proper protection for the Tube-Ice® machine and its component parts, be sure to follow the wiring schematic and electrical specification table when incorporating overloads.

CAUTION The crankcase heater should be energized for a minimum of 2 hours. The crankcase must be free of liquid before attempting to operate the compressor.

The following diagrams show the electrical details for the panel layouts, control circuit, and 3-phase power.

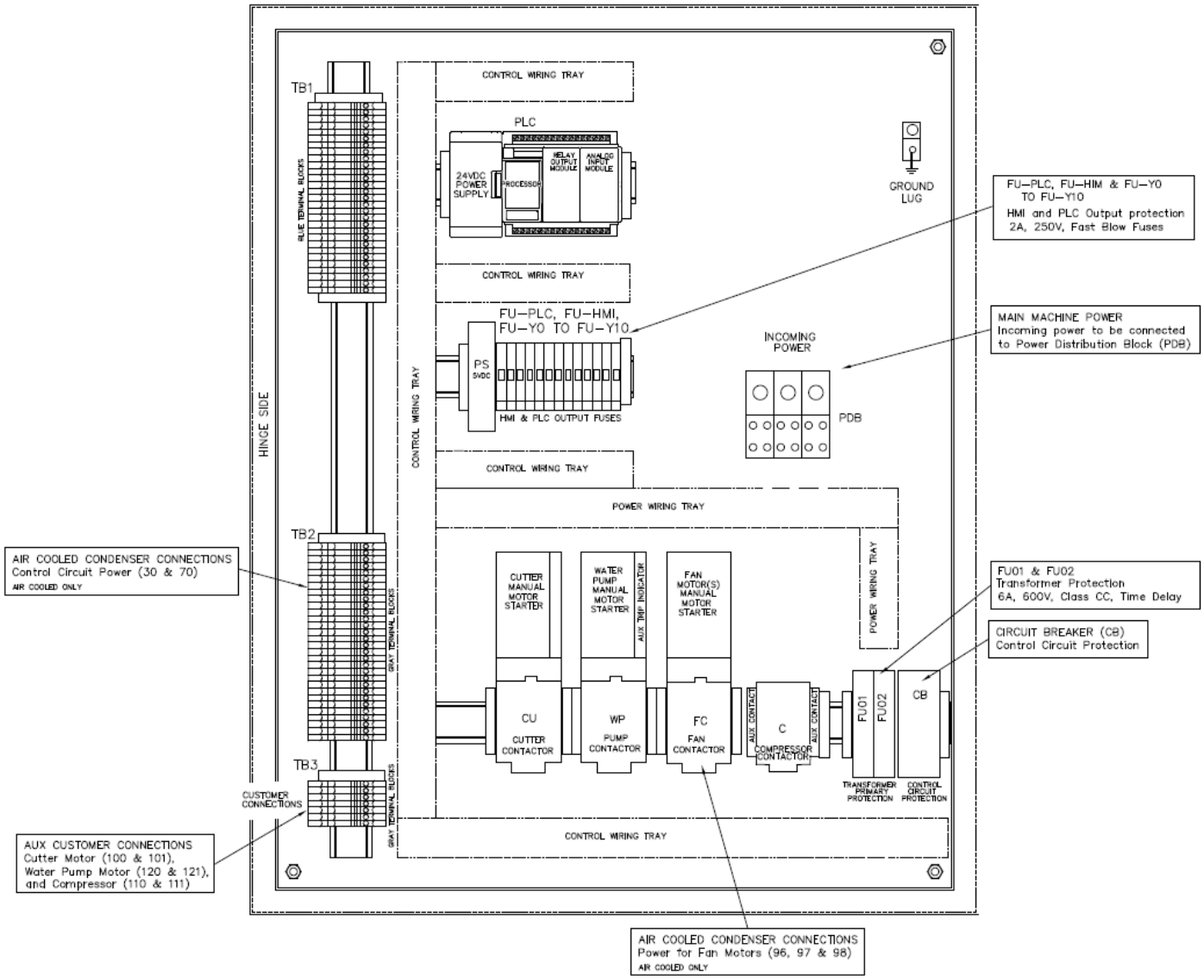

Figure 22: Panel Layout, 60-Hz Non-CE Machines

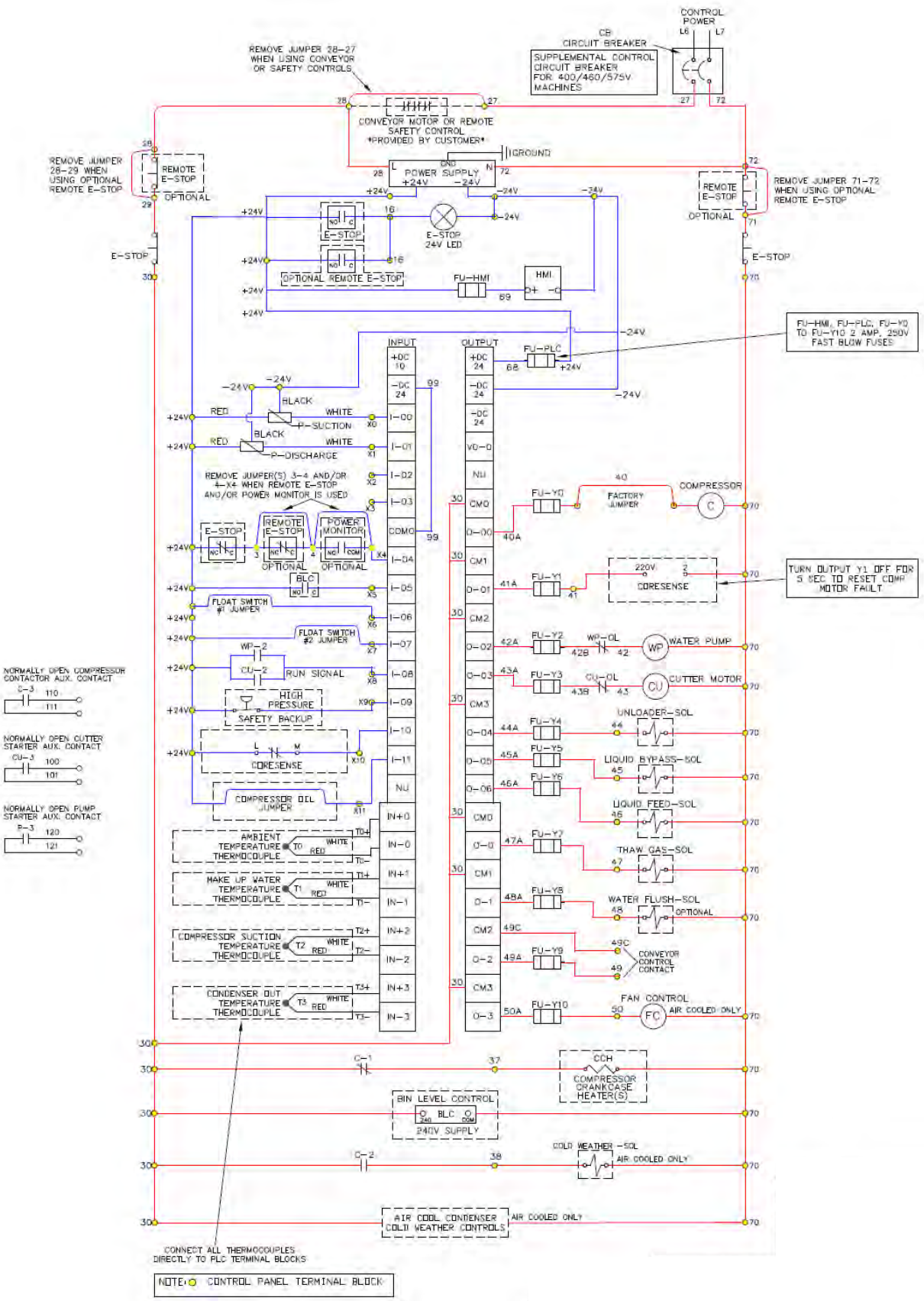

Figure 23: Electrical Schematic, Control Circuit, All Voltages, 60 Hz

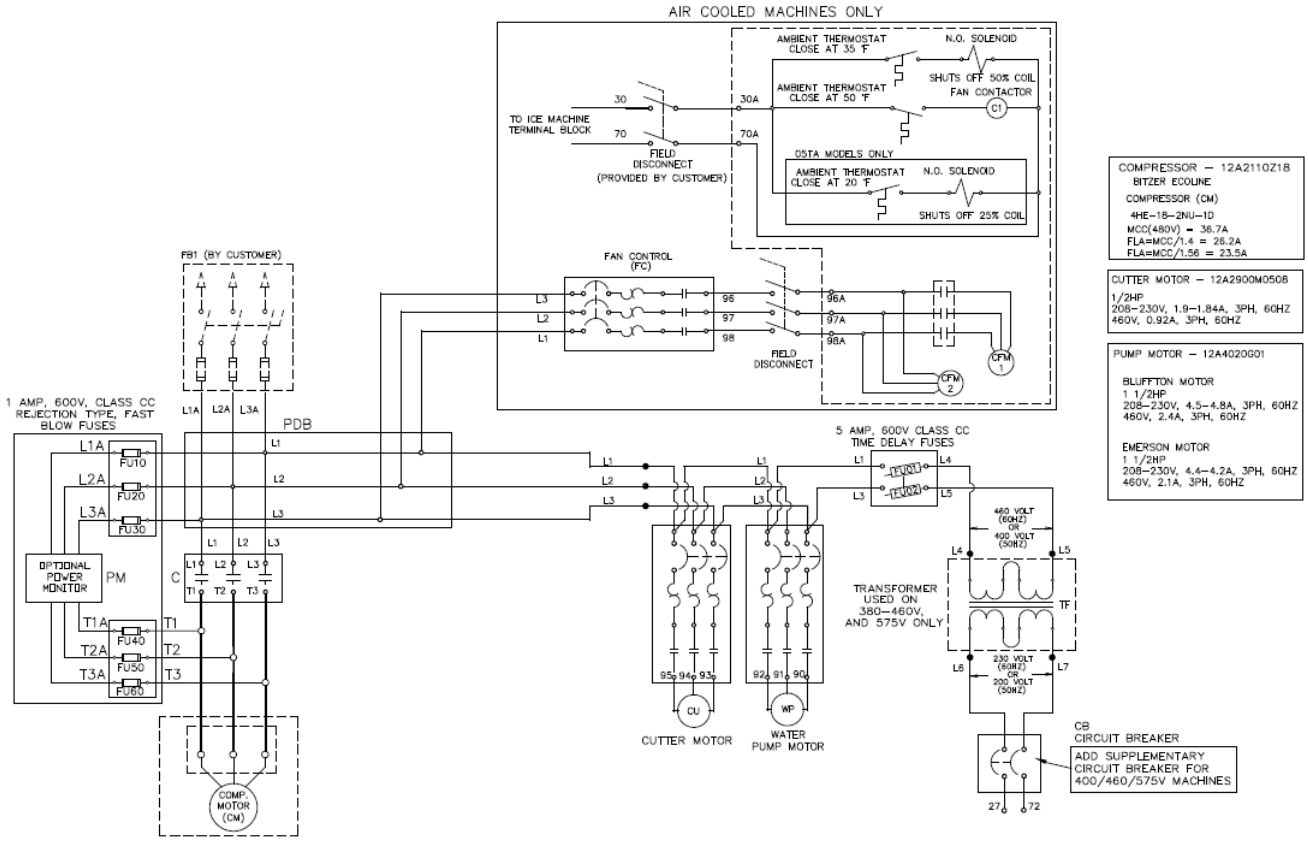

Figure 24: Electrical Schematic, 3-Phase Power, All Voltages 60 Hz

Table 9: Control Panel Parts

Label	Item	Vogt Part No.	Description
BLC	Bin Level Control	12A2117G09	Ice Bin Control
C	Compressor Contactor	12A7516E33	Contactor, 85A, 3 Pole, 1N.O. Aux, 208/240V
		12A7518E30	Aux. Contact, 10A, 1N.O., 1N.C., Side Mount
		12A7518E31	Aux. Contact, 10A, 2N.O., Side Mount
CU	Cutter Motor Starter	12A7516E23	Contactor, 9A, 3 Pole, 1N.O. Aux, 208/240V
		12A7530E56UL	Manual Motor Starter, 4.0-6.3A
		12A7518E33UL	Aux. Trip Contactor, 6A, 1N.O., 1N.C.
E-Stop	Emergency Stop Button	12A7500E159	Illuminated Red, Push-Twist, E-Stop Button
		12A7500E160	Integrated White LED, w/Metal Latch, 24V AC/DC
		12A7500E161	Contact Block, 2N.C.
		12A7500E162	Contact Block, 1N.O., 1N.C.
FC	Condenser Fan Motor(s) Starter	12A7516E25	Contactor, 16A, 3 Pole, 1N.O. Aux, 208/240V
		12A7530E58UL	Manual Motor Starter, 10.0-16.0A
FU01, FU02	Transformer Primary Fuses	12A7504E13	Fuse, 6A, 600V, Class CC, Time Delay
FU-HMI, FU-PLC, FU-Y0, TO, FU-Y10	HMI & PLC Output Fuses	12A7504E23	Fuse, 2A, 250V, Fast Acting
HMI	PLC Interface	12A7536M72	KEB C6 HMI, 10.1” Wide, Color, Touch Screen
PLC	Processor / Base	12A7536M64	PLC, Micro820, 12 DC Inputs, 7 Relay Outputs, 24VDC
	24VDC Supply	12A7537E04	Power Supply, 120/240VAC In, 24VDC/2.5A Out
	Output Module	12A7536M67	Plug-In Module, Digital 4 Point Relay Output
	Input Module	12A7536M69	Plug-In Module, 4 Channel Universal Analog Input
WP	Water Pump Motor Starter	12A7516E23	Contactor, 9A, 3 Pole, 1N.O. Aux, 208/240V
		12A7530E54UL	Manual Motor Starter, 1.6-2.5A
		12A7518E33UL	Aux Trip Contactor, 6A, 1N.O., 1N.C.
Misc Items	Temperature Sensor	12A2117G22	Thermocouple, Type K
	Pressure Transducer	12A2117J09	Pressure Transducer, 0-500 PSI, 5VDC In, 12 to 33 VDC Excitation

Allen Bradley PLC with Touch Screen HMI

The Allen Bradley PLC with Touch Screen HMI is replacing and integrating the former standalone freezer pressure setting (FPS), the bin thermostat, the low-pressure safety, the high-pressure safety, the defrost pressure switch (DPS), and the condenser pressure switch (CPS) with pressure transducers and thermocouples that interact with a touch screen interface. Features such as superheat trends, detailed fault history, and remote access have been added to aid in regular operation, maintenance, and service.

HMI Main Menu

The Touch Screen HMI is the visual representation of the control functions contained within the PLC. When the machine is first started, the user is presented with the **MENU** screen. The **MENU** screen is also accessed by pressing the grid touch screen button from any screen in the HMI.

The touch screen buttons on the **MENU** screen access different submenus within the system. Refer to **Figure 25**.

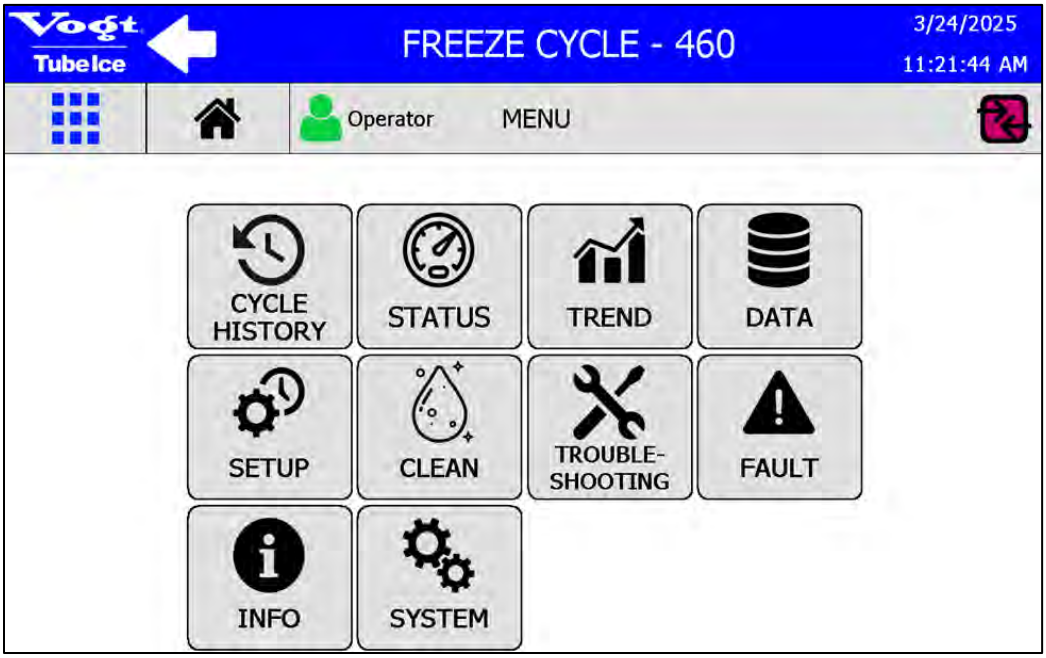

Figure 25: MENU Screen

The **MENU** screen gives access to the submenus below:

CYCLE HISTORY – Displays the Cycle History for the last 50 cycles.

STATUS – Displays the current Suction Pressure, Discharge Pressure, Ambient Temperature, Make-Up Water Temperature, Suction Temperature, and Superheat. Also displays the current setpoints for the **Freezer Pressure Setting** and **High Pressure Safety.**

TREND – Displays graphs of the Suction Pressure, Discharge Pressure, Ambient Temperature, Make-Up Water Temperature, and Compressor Superheat for the last 8 hours.

DATA – Allows the operator to download or email machine data collected by the HMI.

SETUP – Displays the user adjustable setpoints, delays, and safeties such as **Freezer Pressure Setting, High Pressure Safety, Cutter Delay,** etc.

CLEAN – Allows the operator to enter the clean mode on the machine.

TROUBLESHOOTING – Allows the operator to perform a full pump down for before maintenance, check the status of PLC inputs and outputs, and to activate individual PLC outputs to test individual components on the machine (i.e. – water pump, cutter motor, etc.). Includes a Log that records maintenance events.

FAULT – Displays historical fault data for the machine.

INFO – Displays information about the ice machine including Serial Number, Job Number, Manufactured Date, etc. Provides access to digital service manual.

SYSTEM – Allows the operator to activate notifications and remote access capability. Provides access to the setup of machine user groups.

The top bar of the HMI displays shortcut menus and system status information. Refer to **Figure 26**.

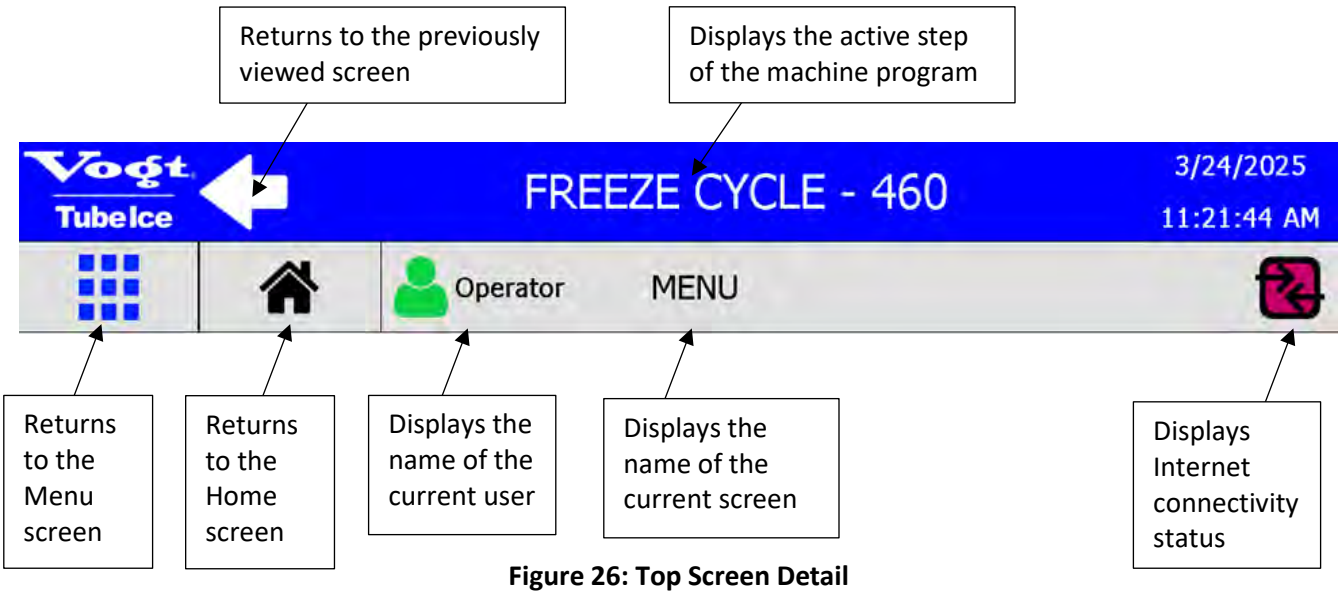

Figure 26: Top Screen Detail

For Internet connectivity status, the system status is according to the color code below:

The machine is connected to the Internet and a remote user is logged in.

The machine is connected to the Internet, but no remote users are logged in.

The machine is connected to the internet and remote access is turned off.

The machine is not connected to the Internet.

The machine is not connected to the Internet and remote access is turned off.

The Current User icon color is according to this color code:

Operator (Password: may28)

Technician (Password: oslo47)

Manager (Password: pau33)

Support

Developer

HMI Primary Submenus

The HMI contains submenus that provide access to machine functions and reports. The primary submenus are accessed from the **MENU** screen, **Figure 19**, and are detailed below. Refer to **Figure 27** through **Figure 36**.

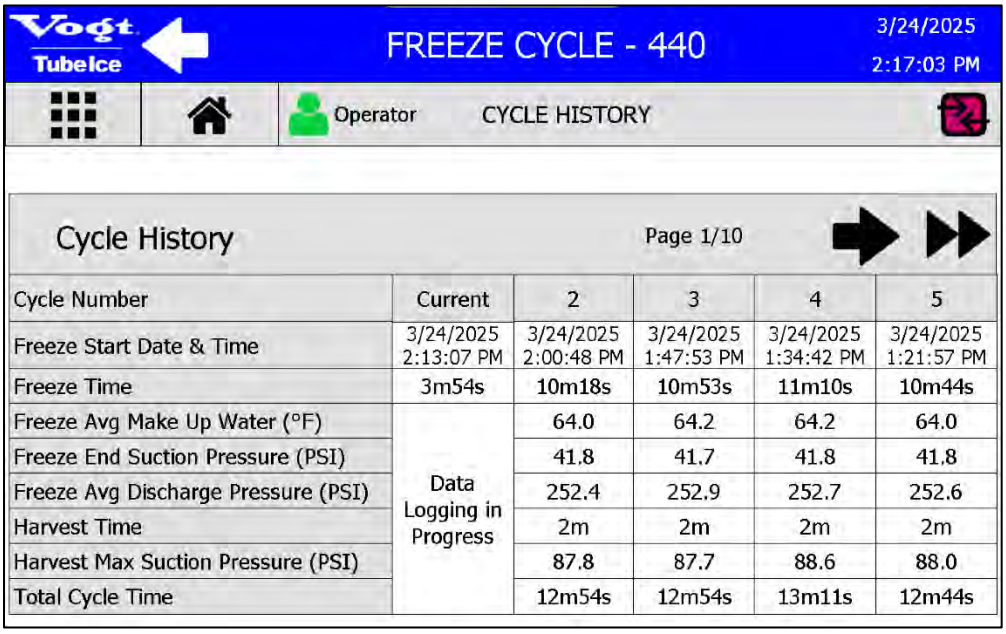

Cycle Number	Current	2	3	4	5
Freeze Start Date & Time	3/24/2025 2:13:07 PM	3/24/2025 2:00:48 PM	3/24/2025 1:47:53 PM	3/24/2025 1:34:42 PM	3/24/2025 1:21:57 PM
Freeze Time	3m54s	10m18s	10m53s	11m10s	10m44s
Freeze Avg Make Up Water (°F)	Data Logging in Progress	64.0	64.2	64.2	64.0
Freeze End Suction Pressure (PSI)		41.8	41.7	41.8	41.8
Freeze Avg Discharge Pressure (PSI)		252.4	252.9	252.7	252.6
Harvest Time		2m	2m	2m	2m
Harvest Max Suction Pressure (PSI)		87.8	87.7	88.6	88.0
Total Cycle Time		12m54s	12m54s	13m11s	12m44s

Figure 27: CYCLE HISTORY Screen

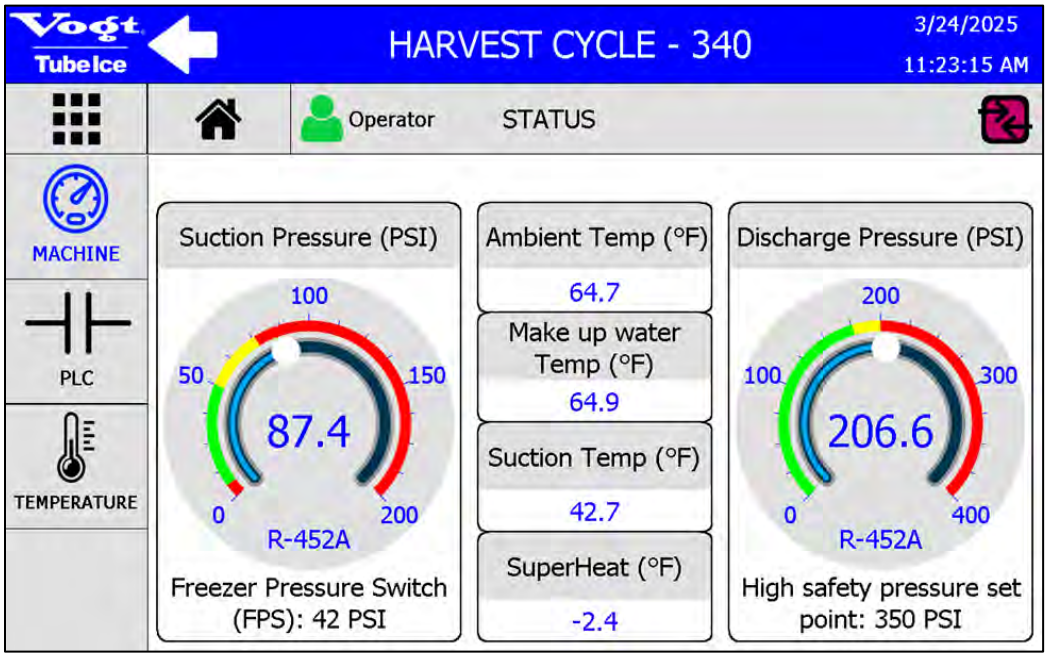

Figure 23: STATUS Screen

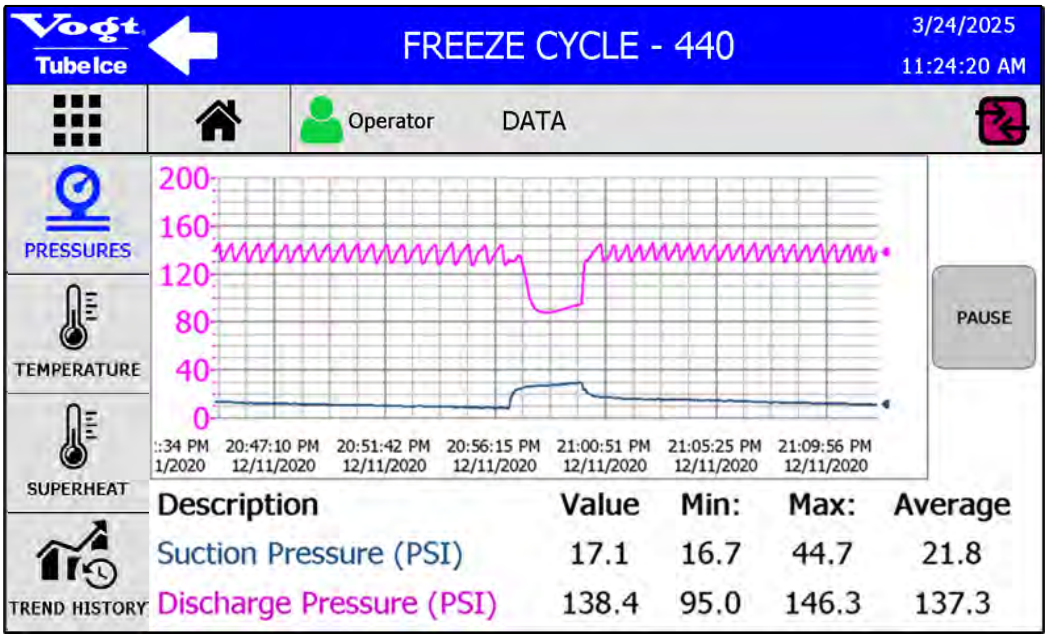

Figure 29: TREND Screen

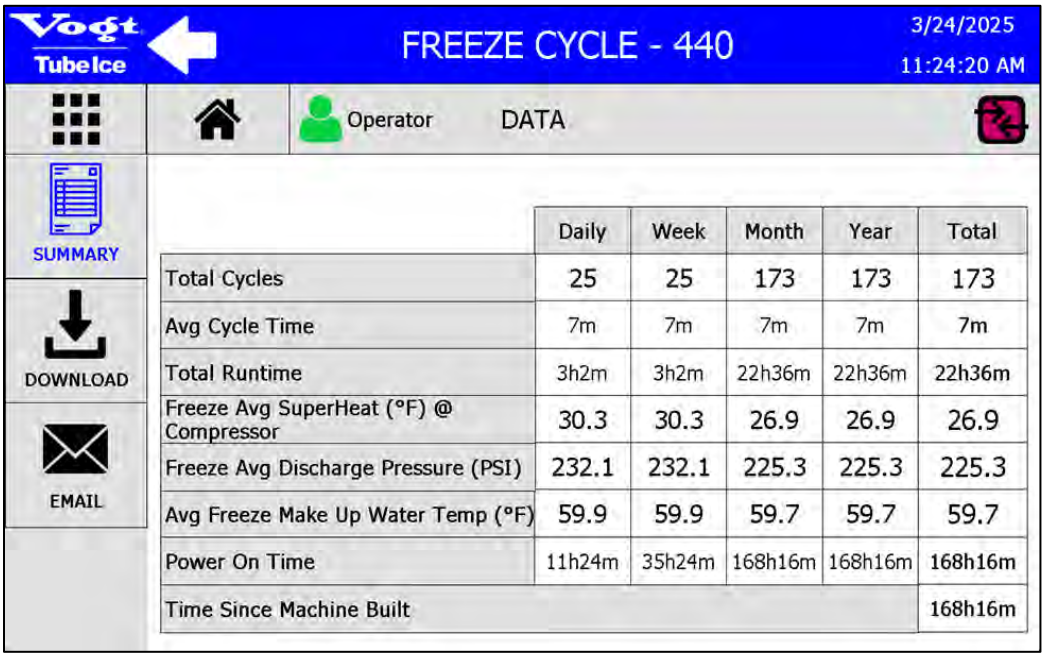

	Daily	Week	Month	Year	Total
Total Cycles	25	25	173	173	173
Avg Cycle Time	7m	7m	7m	7m	7m
Total Runtime	3h2m	3h2m	22h36m	22h36m	22h36m
Freeze Avg SuperHeat (°F) @ Compressor	30.3	30.3	26.9	26.9	26.9
Freeze Avg Discharge Pressure (PSI)	232.1	232.1	225.3	225.3	225.3
Avg Freeze Make Up Water Temp (°F)	59.9	59.9	59.7	59.7	59.7
Power On Time	11h24m	35h24m	168h16m	168h16m	168h16m
Time Since Machine Built					168h16m

Figure 30: DATA Screen

Figure 31: SETUP Screen

Figure 32: CLEAN Screen

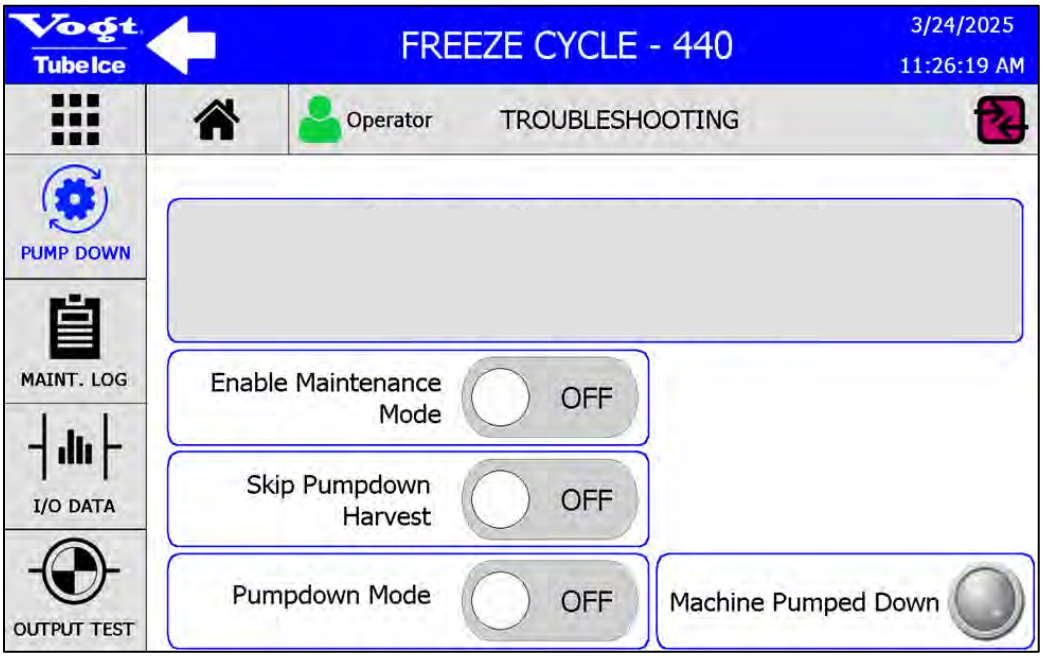

Figure 33: TROUBLESHOOTING Screen

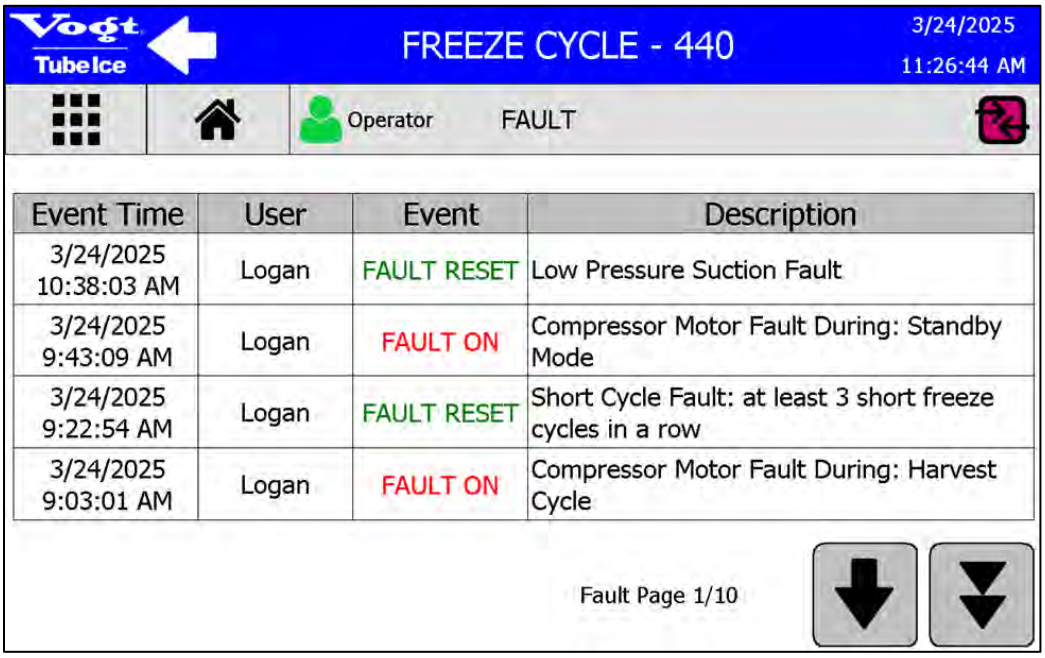

Figure 34: FAULT Screen

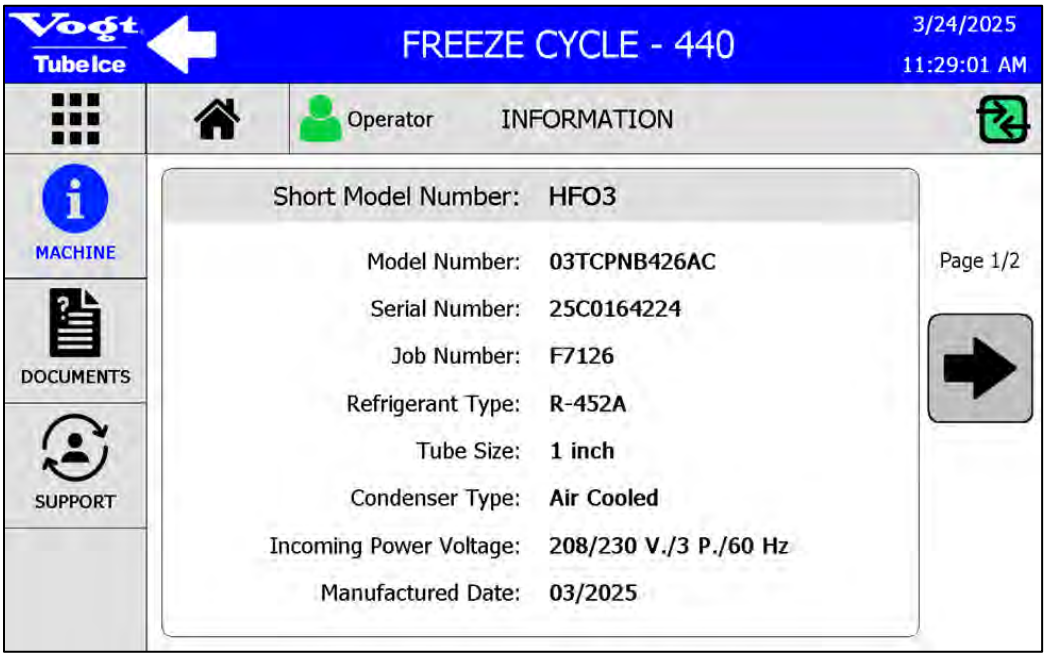

Figure 35: INFO Screen

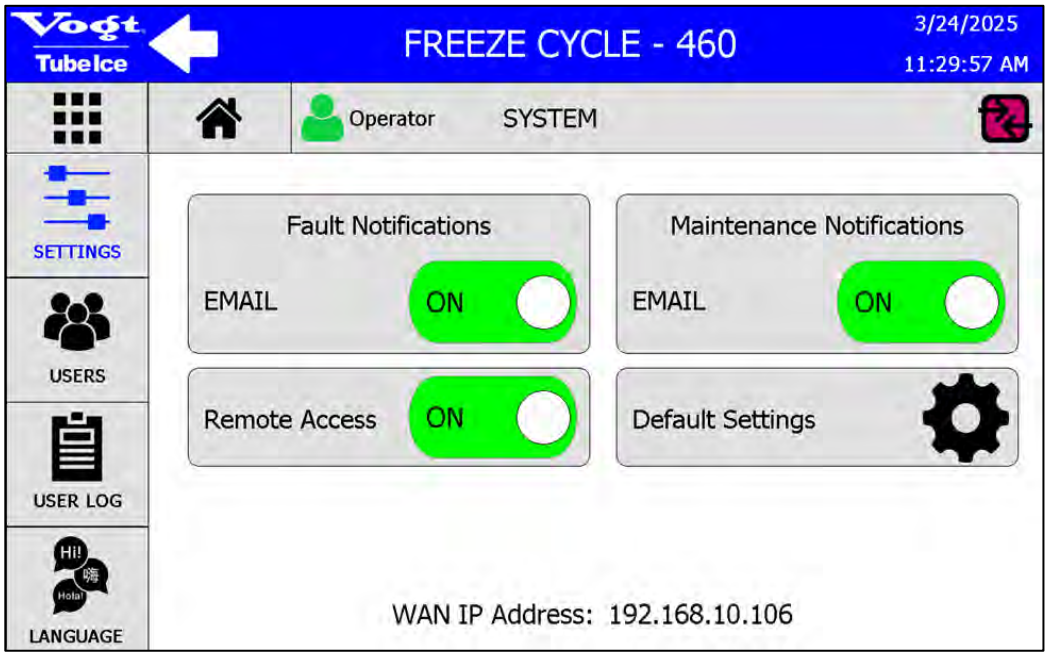

Figure 36: SYSTEM Screen

HMI Home Screen

Pressing the **HOME** touch screen button from any screen in the HMI will take the operator to the **HOME** screen that displays the primary operational information of the ice machine. Refer to **Figure 37.**

Figure 37: HOME Screen

Basic machine parameters such as the **Freezer Pressure Setting**, and the **Harvest Timer** can be quickly accessed in the **QUICK SETUP** submenu. See **Figure 38**.

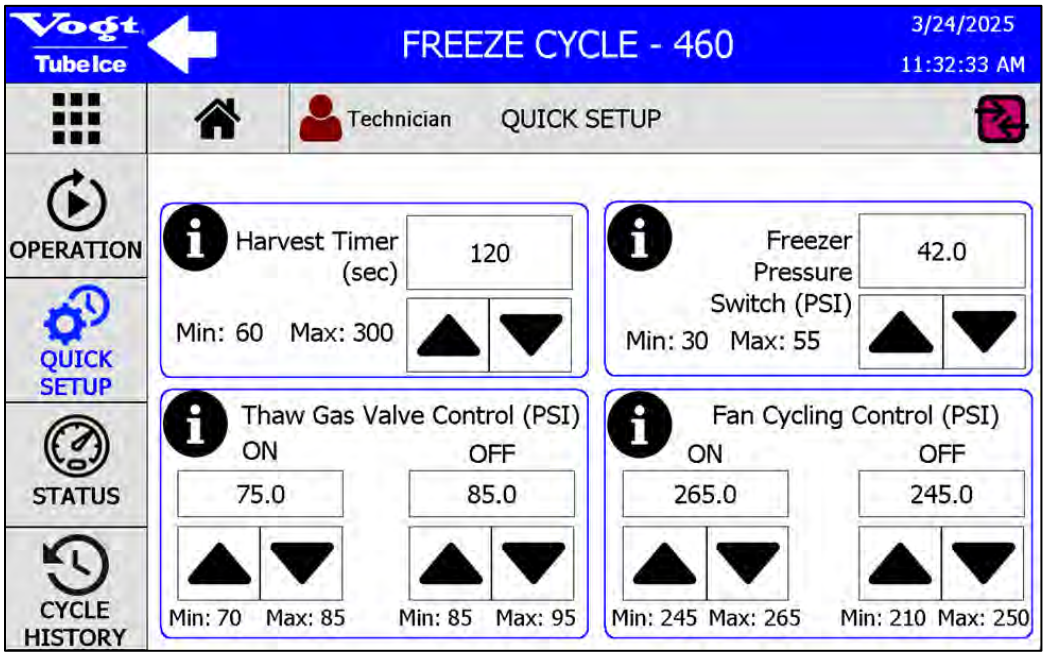

Figure 38: QUICK SETUP

Pressing the information icon ⓘ provides additional information about each parameter. **Figure 39** shows the information available for the **Harvest Timer**.

Figure 39: Information Icon Detail

HMI Detailed Screens

Within each primary submenu that is accessed from the main **MENU** screen, Figure 19, additional menus are available to view specific information about the machine, to access specific functions, or to change specific parameters.

The STATUS screen, displays the current Suction Pressure, Discharge Pressure, Ambient Temperature, Make-Up Water Temperature, Suction Temperature, and Superheat. From this screen, PLC input and output status is viewed by pressing the PLC submenu touch screen button. **See Figure 40.**

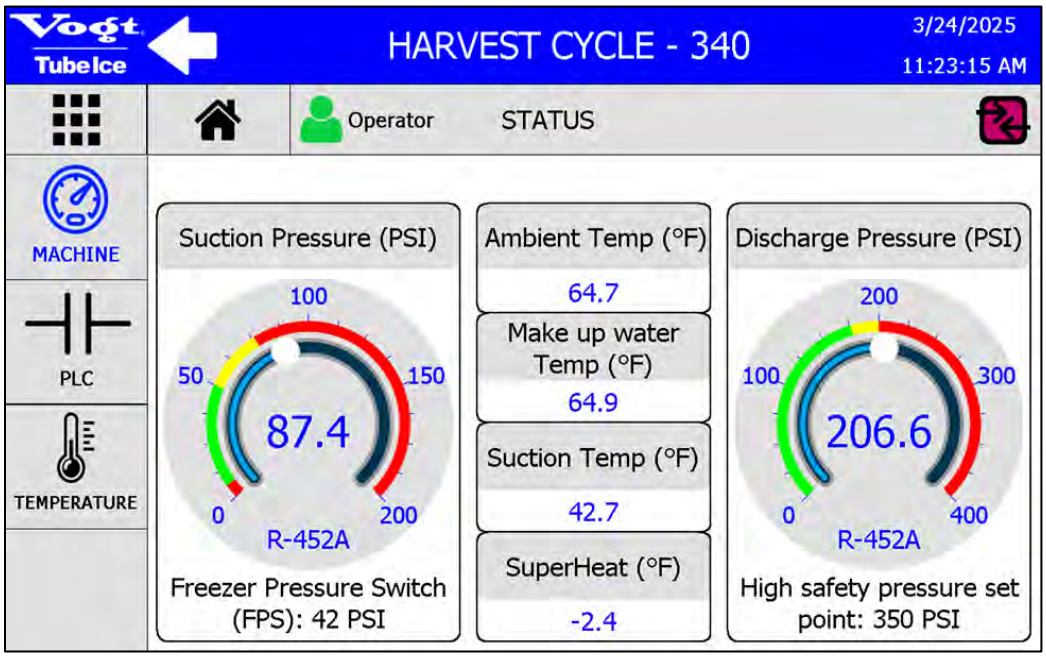

Figure 4013: Machine Status Screen

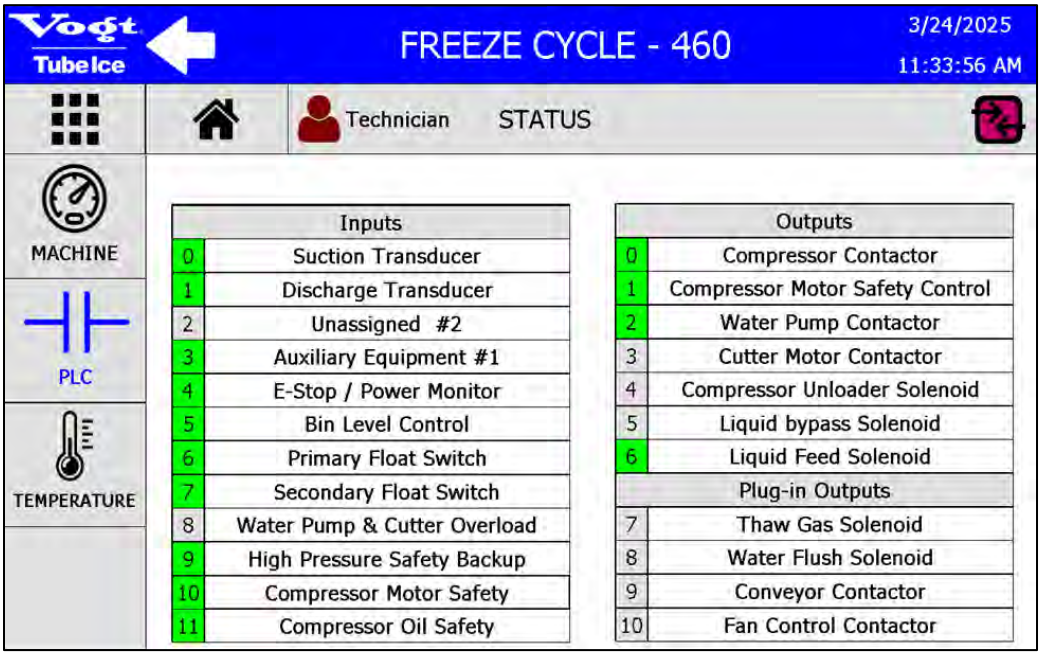

	Inputs
0	Suction Transducer
1	Discharge Transducer
2	Unassigned #2
3	Auxiliary Equipment #1
4	E-Stop / Power Monitor
5	Bin Level Control
6	Primary Float Switch
7	Secondary Float Switch
8	Water Pump & Cutter Overload
9	High Pressure Safety Backup
10	Compressor Motor Safety
11	Compressor Oil Safety

	Outputs
0	Compressor Contactor
1	Compressor Motor Safety Control
2	Water Pump Contactor
3	Cutter Motor Contactor
4	Compressor Unloader Solenoid
5	Liquid bypass Solenoid
6	Liquid Feed Solenoid
	Plug-in Outputs
7	Thaw Gas Solenoid
8	Water Flush Solenoid
9	Conveyor Contactor
10	Fan Control Contactor

Figure 41: PLC Submenu

The **TREND** screen, Figure, displays Pressure, Temperature, and Superheat graphs by pressing the touch screen buttons. Press the **TEMPERATURE** and **SUPERHEAT** touch screen buttons to view graphs of each. Trend history is available for up to 8 hours by pressing the **PAUSE** touch screen button for the graph. See **Figure 42** through **Figure 45**.

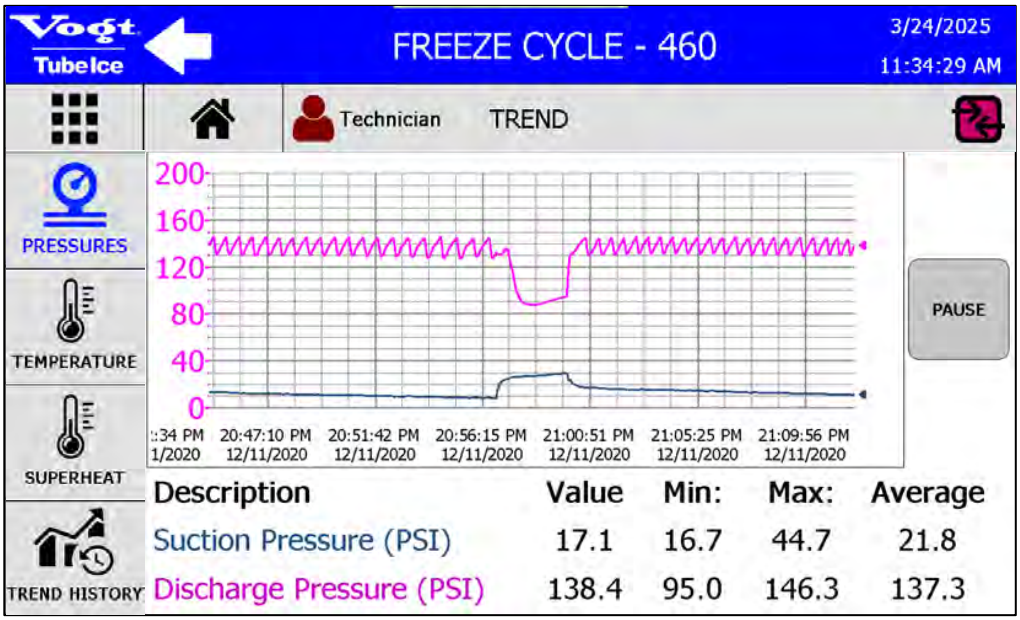

Figure 42: PRESSURE Trend

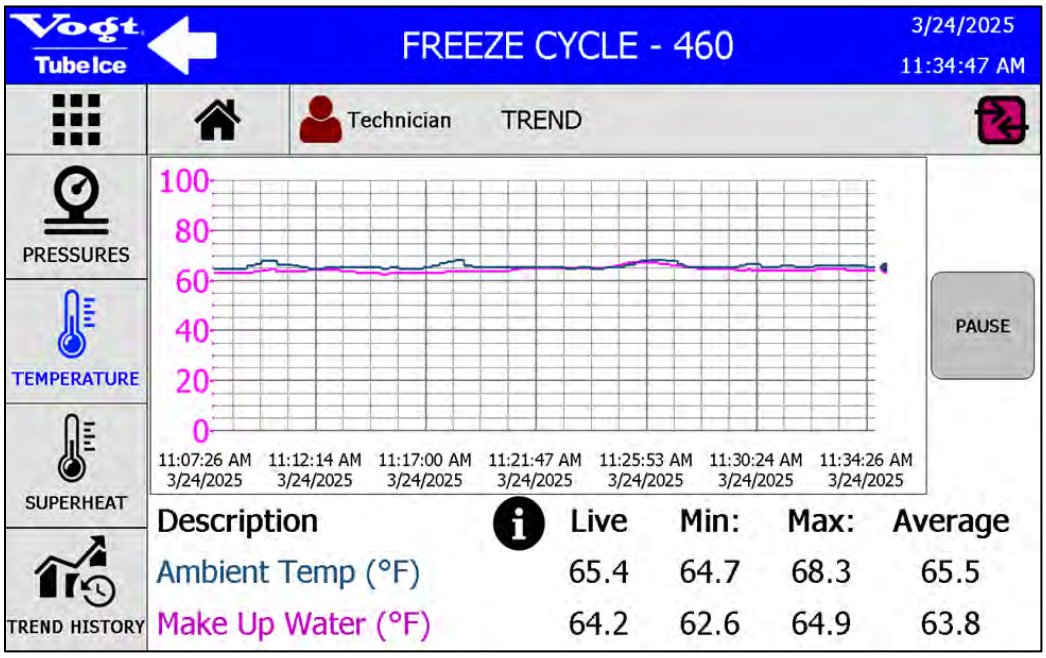

Figure 43: TEMPERATURE Trend

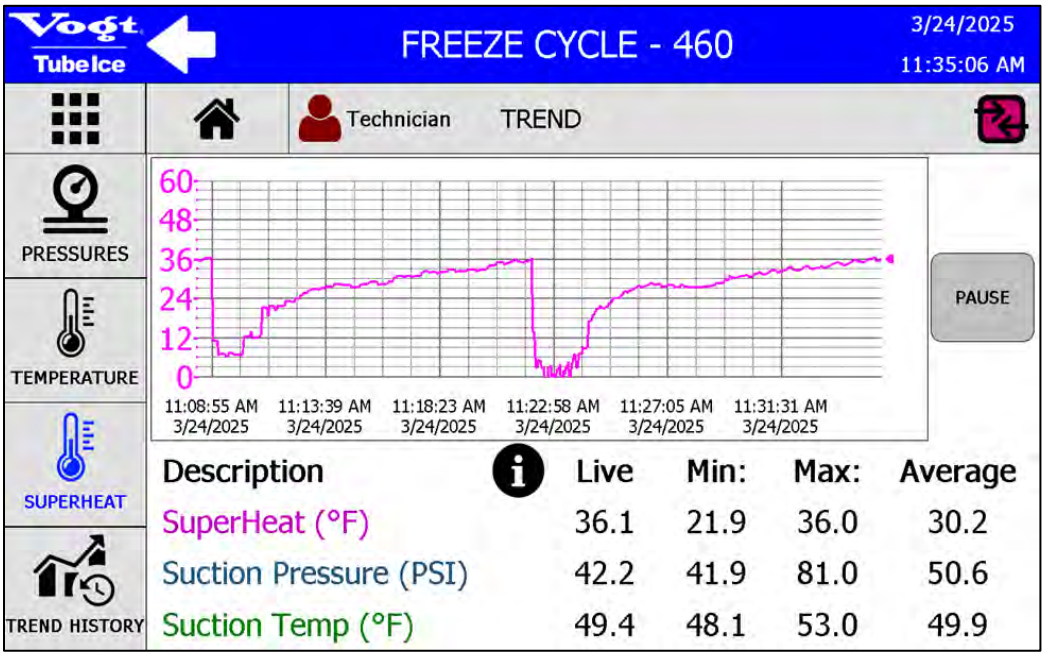

Figure 44: SUPERHEAT Trend

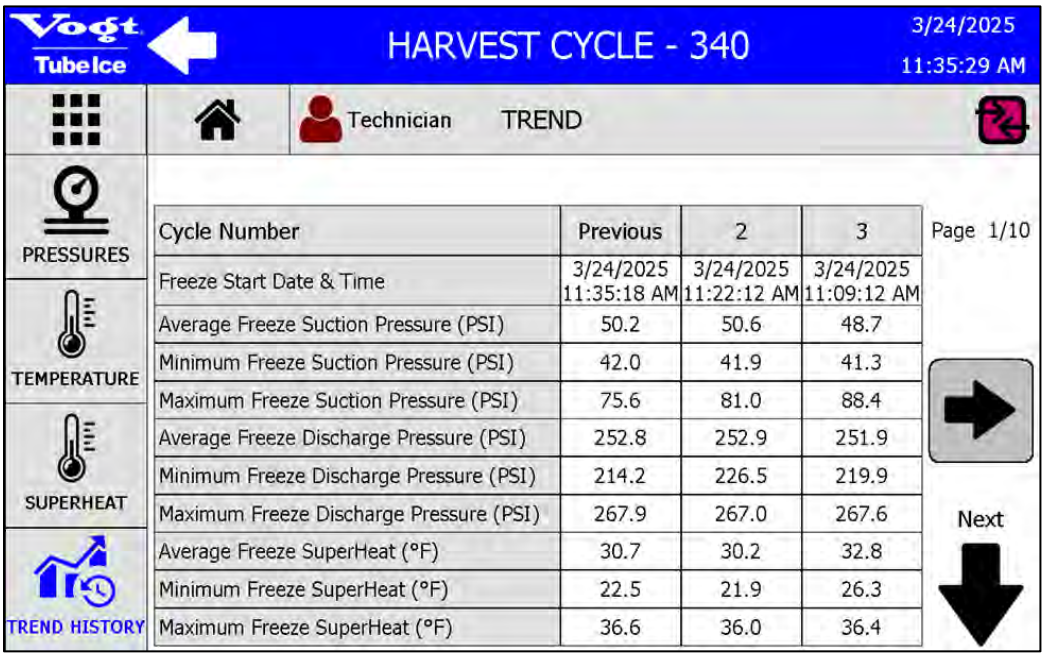

Cycle Number	Previous	2	3
Freeze Start Date & Time	3/24/2025 11:35:18 AM	3/24/2025 11:22:12 AM	3/24/2025 11:09:12 AM
Average Freeze Suction Pressure (PSI)	50.2	50.6	48.7
Minimum Freeze Suction Pressure (PSI)	42.0	41.9	41.3
Maximum Freeze Suction Pressure (PSI)	75.6	81.0	88.4
Average Freeze Discharge Pressure (PSI)	252.8	252.9	251.9
Minimum Freeze Discharge Pressure (PSI)	214.2	226.5	219.9
Maximum Freeze Discharge Pressure (PSI)	267.9	267.0	267.6
Average Freeze SuperHeat (°F)	30.7	30.2	32.8
Minimum Freeze SuperHeat (°F)	22.5	21.9	26.3
Maximum Freeze SuperHeat (°F)	36.6	36.0	36.4

Figure 45: SUPERHEAT Trend

The DATA screen, **Figure 46** provides cycle data for various periods. The information collected by the HMI can be download to a storage device through the USB ports on the front of the control panel or it can be sent by email if the machine is connected to the Internet. See **Figure 46 through 48.**

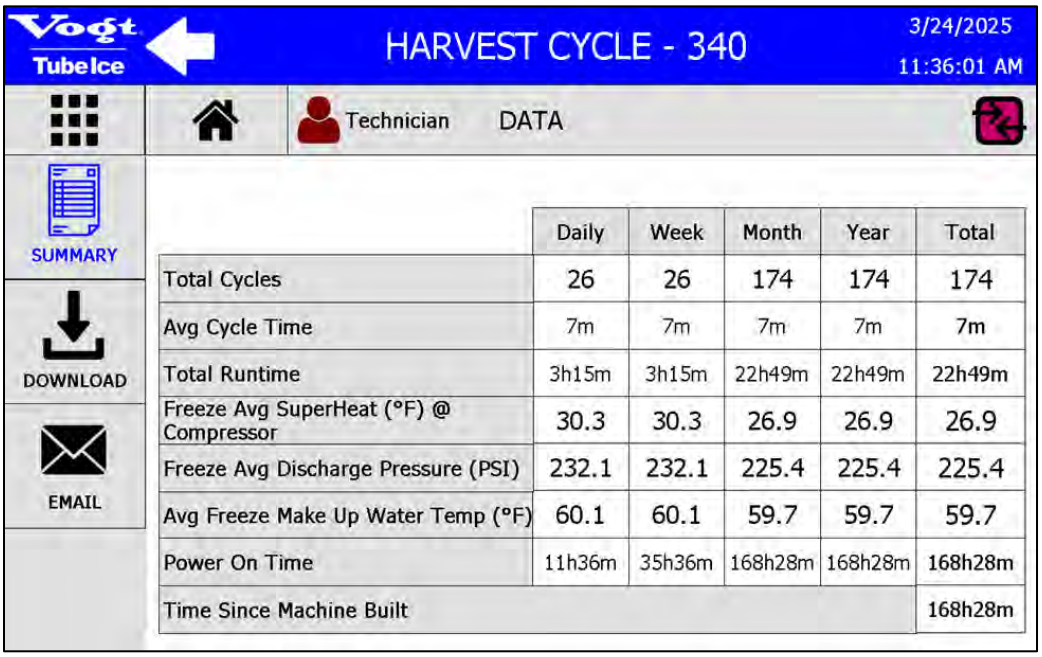

	Daily	Week	Month	Year	Total
Total Cycles	26	26	174	174	174
Avg Cycle Time	7m	7m	7m	7m	7m
Total Runtime	3h15m	3h15m	22h49m	22h49m	22h49m
Freeze Avg SuperHeat (°F) @ Compressor	30.3	30.3	26.9	26.9	26.9
Freeze Avg Discharge Pressure (PSI)	232.1	232.1	225.4	225.4	225.4
Avg Freeze Make Up Water Temp (°F)	60.1	60.1	59.7	59.7	59.7
Power On Time	11h36m	35h36m	168h28m	168h28m	168h28m
Time Since Machine Built					168h28m

Figure 46: DATA Summary

To download data to an external storage device, follow these steps:

Press the **DOWNLOAD** submenu touch screen button on the left side of the **DATA** screen.

Insert a storage device in the USB port on the front of the control panel.

Select the boxes for the data that is to be downloaded.

Press the **DOWNLOAD** touch screen button on the right side of the screen.

The data will be sent directly to the storage device connected to the machine.

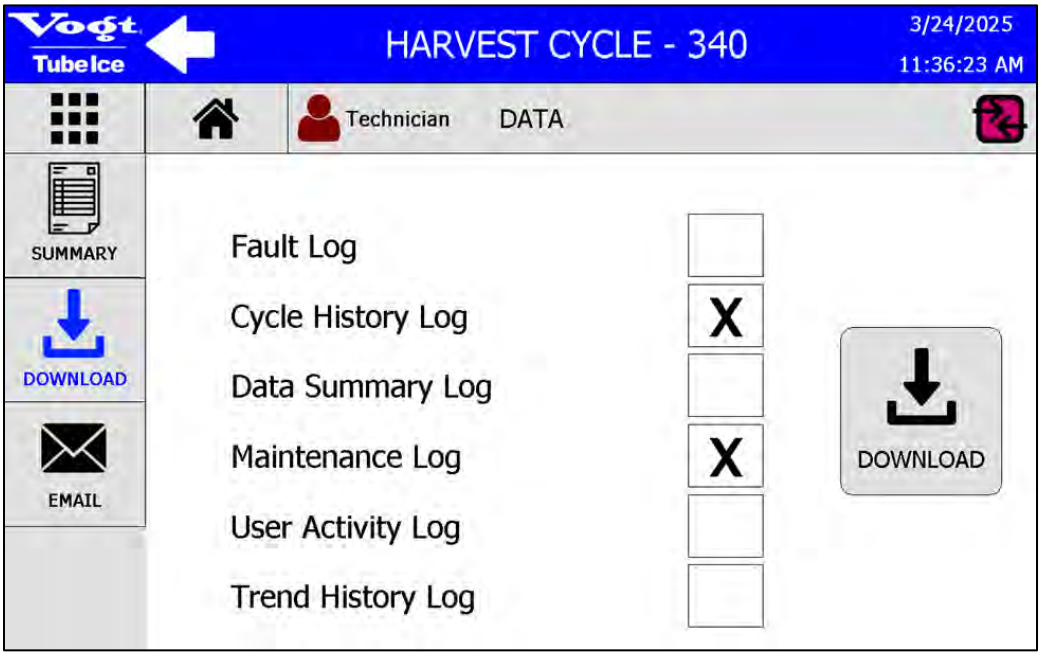

Figure 47: Download

To email data, follow these steps:

1. Press the **EMAIL** submenu touch screen button on the left side of the **DATA** screen.
2. Select the boxes for the data that is to be emailed.
3. Press the **SEND** touch screen button on the right side of the screen.

Note: The data will be sent by email only if the machine is connected to the Internet.

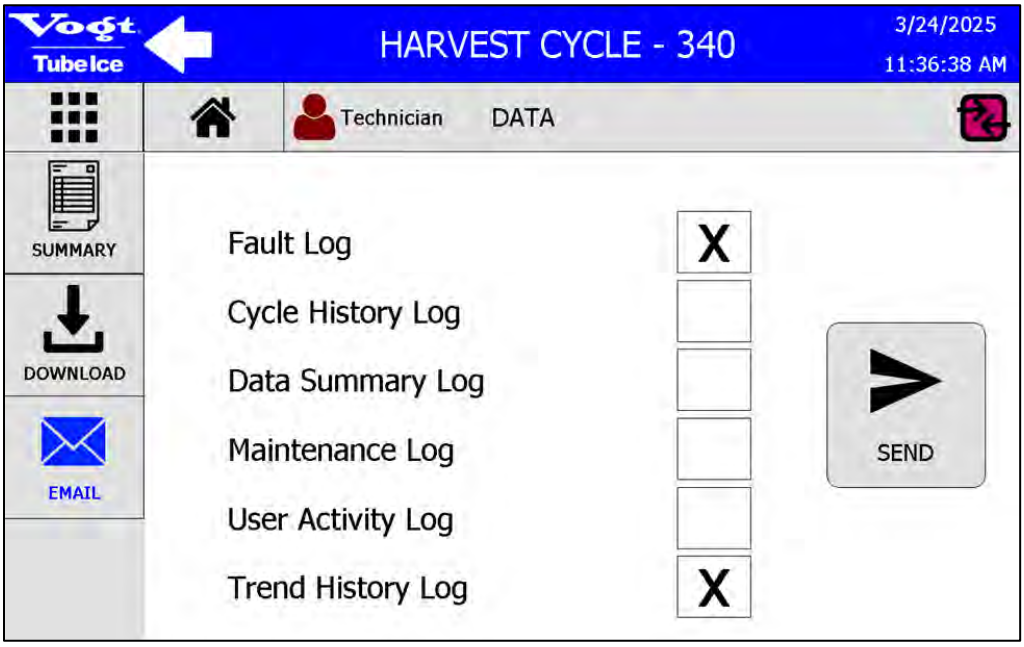

Figure 48: Email

The **SETUP** screen, **Figure 31**, allows the operator to adjust all of the parameters of the machine. Using the touch screen, select the gear icon next to the parameter to be changed and follow the prompts on the screen to adjust the value. Use the arrow buttons to access other pages within the submenus. **See figures 49 through 55**.

Figure 49: TIMER Settings Page1

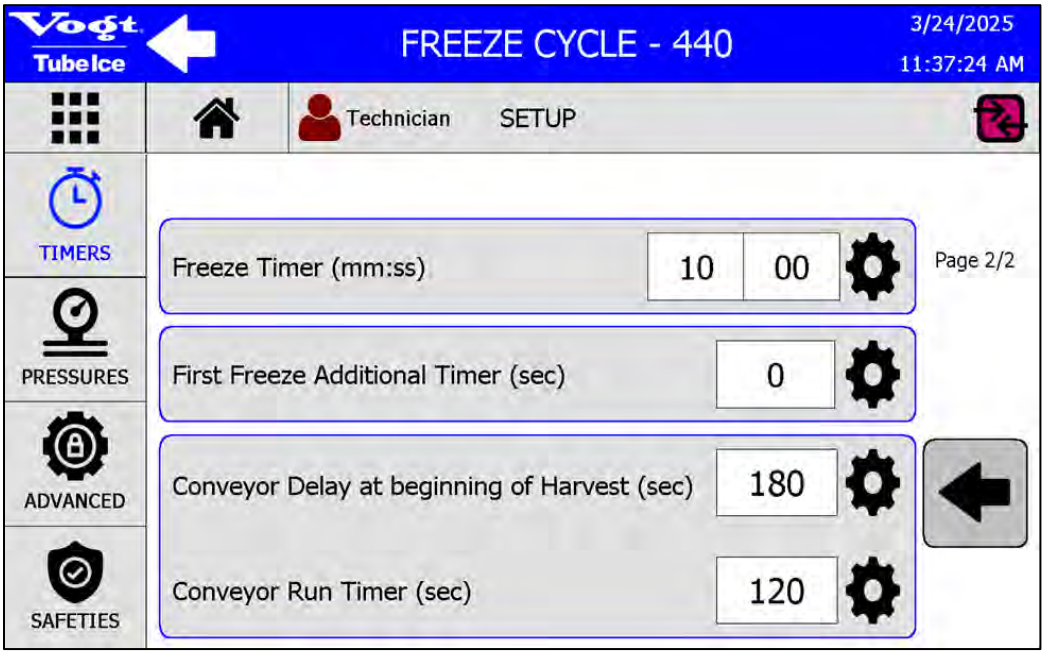

Figure 50: TIMER Settings Page2

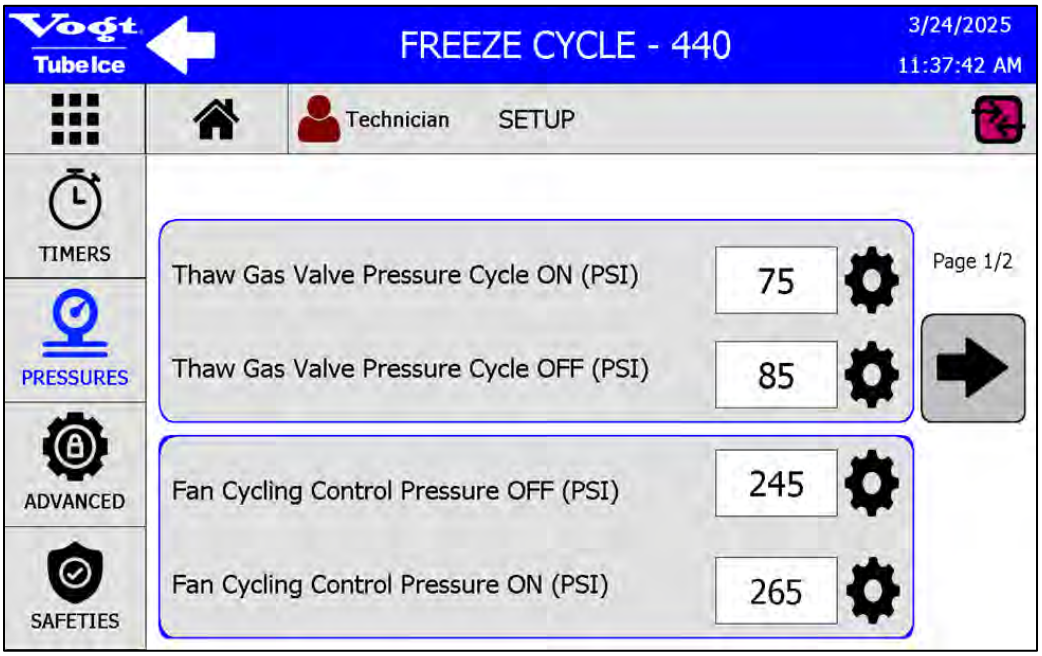

Figure 51: PRESSURE Settings Page1

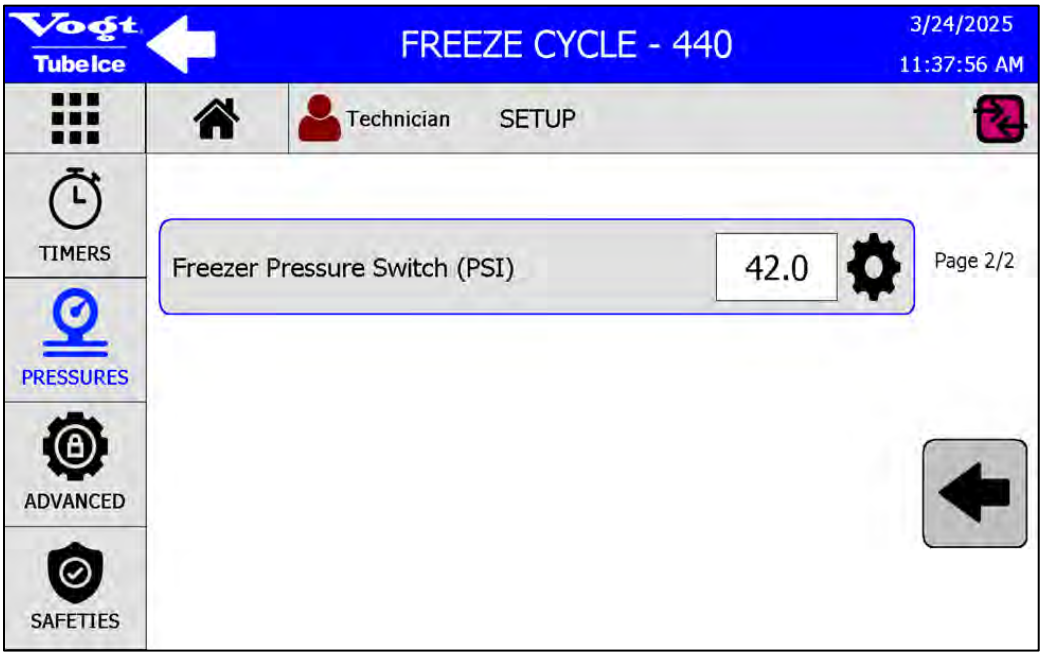

Figure 52: PRESSURE Settings Page2

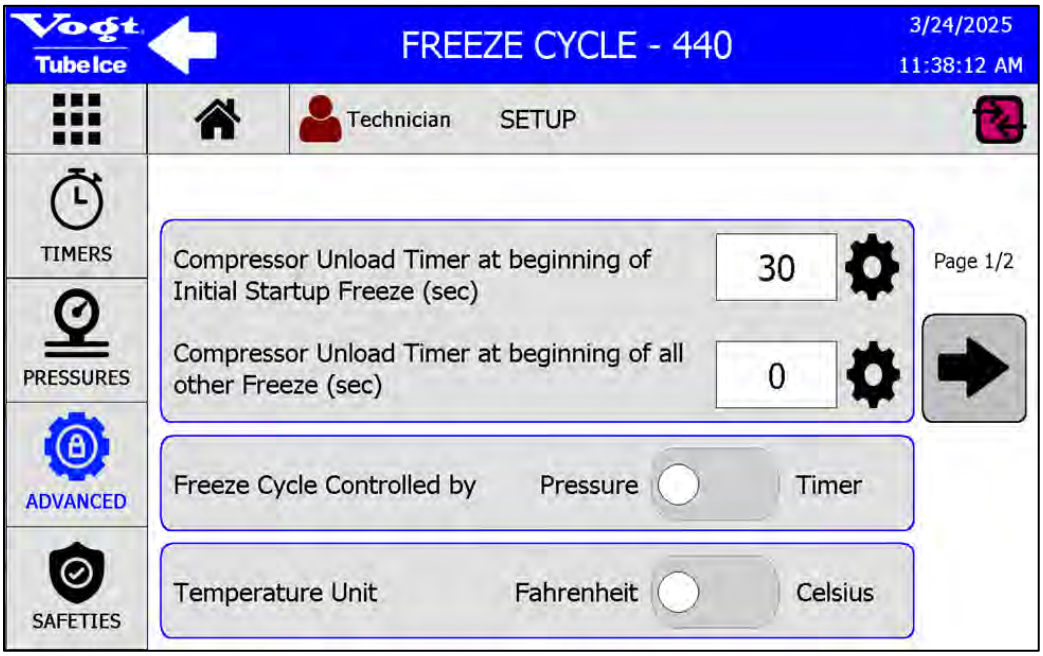

Figure 53: ADVANCED Settings Page1

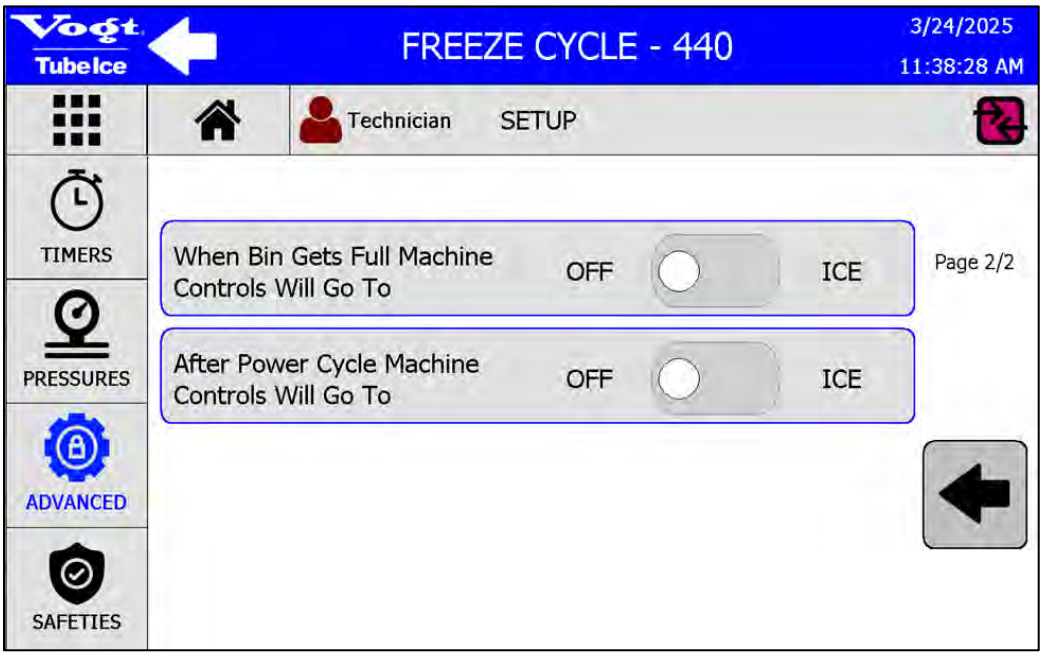

Figure 54: ADVANCED Settings Page2

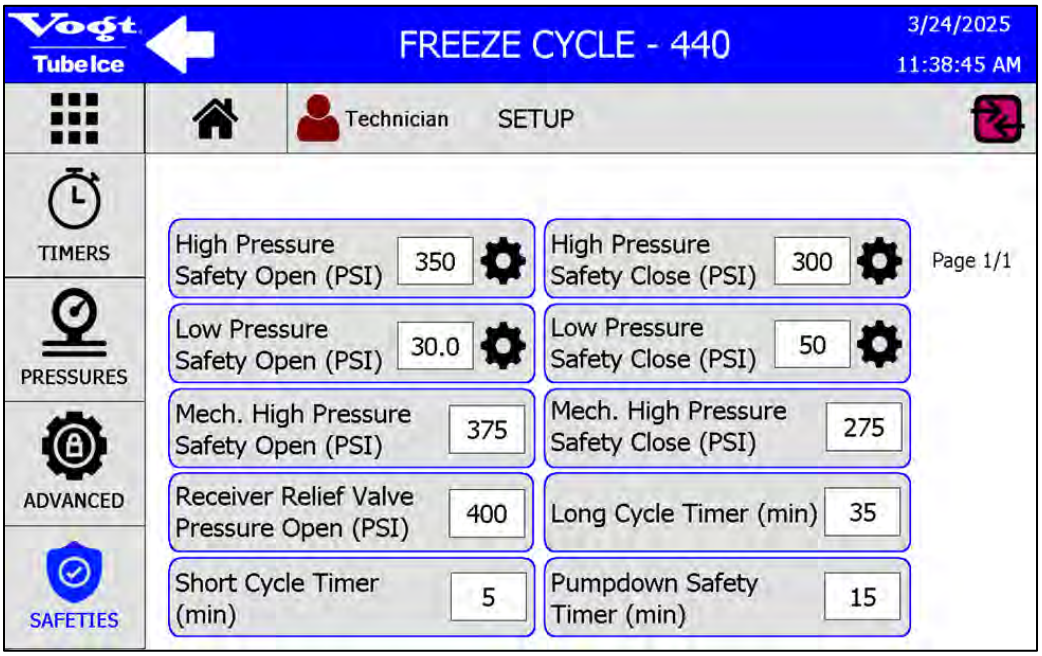

Figure 55: SAFETY Settings

The **CLEAN** screen, **Figure 56**, allows the operator to enter the cleaning mode of the machine. Refer to "Cleaning" in the Maintenance section of this manual for details on the cleaning process and the menu screens.

The **TROUBLESHOOTING** screen, **Figure 33**, allows the operator to perform maintenance and service functions. From the **PUMPDOWN** submenu, press the **Enable Maintenance Mode** touch screen button to access the machine maintenance functions. Refer to **Error! Reference source not found.** for additional information on the **PUMPDOWN** submenu.

Press the **LOG** touch screen button to view records of actions that operators have taken on the machine. The **CREATE MAINTENANCE NOTE** touch screen button allows the operator to enter a separate note about service operations that have been performed, such as an oil change. **See Figure 57**

Figure 56: CLEAN Screen

Figure 57: CLEAN LOG Screen

Press the **I/O DATA** touch screen button to view the number of cycles and total run time for each input and output. See **Figure 52**.

Figure 58: I/O DATA Screen

The **OUTPUT TEST** screen allows the user to turn on individual outputs to check for proper operation. Press the button next to the output to test. Press the gear icon to change the duration that the output is turned on. See Figure 53.

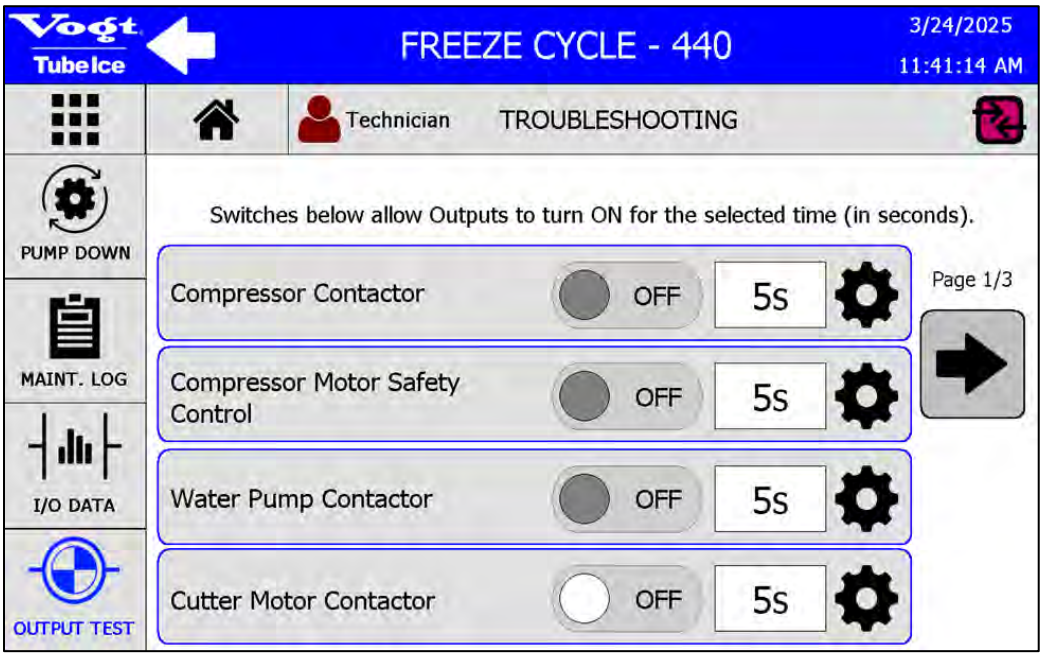

Figure 59: OUTPUT TEST Screen

The **FAULT** screen, **Figure 34,** displays the historical fault data for the machine. The last 20 fault records are stored.

The **INFO** screen, **Figure 35**, displays basic information about the ice machine. Press the **DOCUMENTS** touch screen button to access the machine service manual and specification sheet. Pressing the touch screen buttons will open the document within the HMI. See **Figure 60.**

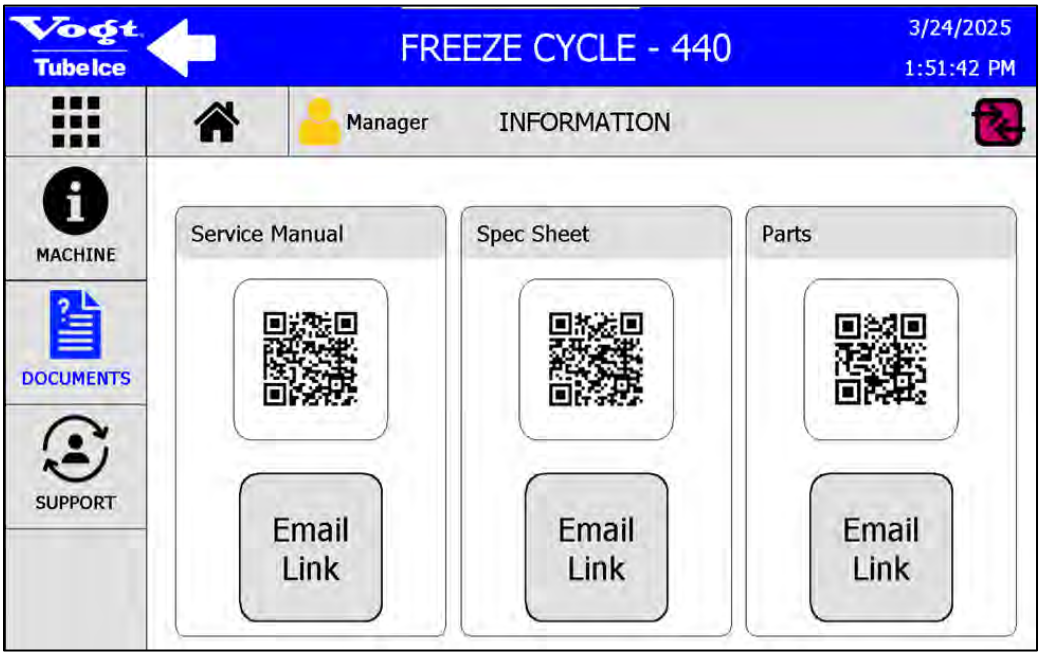

Figure 60: DOCUMENTS Screen

Press the SUPPORT touch screen button to display the contact information for Vogt SuperCare Technical Support and Parts. See **Figure 61**.

Figure 61: SUPPORT Screen

The **SYSTEM** screen, **Figure 36,** provides access to machine user groups and remote access capabilities. To enable **Fault Notifications** or **Maintenance Notifications** to be sent by email, press the button next to **EMAIL**.

Press the button next to **Remote Access** to enable remote users to connect to the machine.

Note: The machine must be connected to the Internet to enable email and remote access capabilities.

To return the machine to the factory settings, press the **Default Settings** touch screen button.

Press the **USERS** touch screen button to set up user groups for the machine, if desired. See **Figure 62.**

Four user groups are available: **Operator** – **Technician** – **Manager** - **Vogt**

Figure 62: USERS Screen

To log in as a specific user, follow these steps:

Select the **Group** and the **User** to log in.

Press anywhere in the **Password** box and enter the **User** password.

Specific users can be added to each group. To add a user, follow these steps:

Select the **Group** touch screen button for the new user.

Press the **Create** touch screen button and follow the prompts to set up a new name and password. The new name will appear under the **User** section of the screen.

To edit the permissions of a specific user or group, follow these steps:

Log in as a specific user according to the instructions above.

Press the **Edit** touch screen button.

Select the desired permissions and settings for the user according to the prompts.

Press the **USER LOG** touch screen button to access records of the users that have accessed the system. See **Figure 63**.

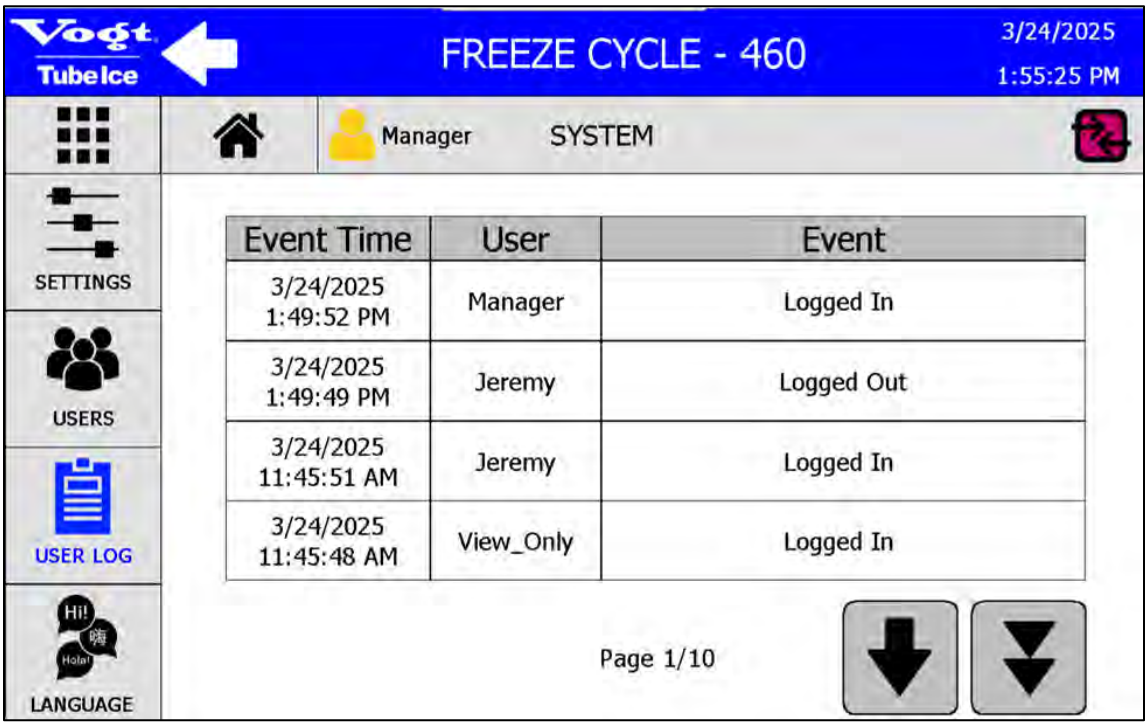

Figure 63: USER LOG Screen

Control Panel Details

The control panel contains additional components that allow the machine to operate properly. Table 6 explains these components and their functions.

Table 4: Control Panel Component Functions

Component	Function
AX	Auxiliary trip indicator for manual motor starters. Switch opens, turning off the motor when cutter or pump motor starter trips.
CB	Overload and short circuit protection for control circuit and crankcase heater. (400/460V machines only)
C	Provides power to the compressor motor. Continuously energized during freezing and thawing. Auxiliary contacts control main power for control circuit components, crankcase heater, control relay, and harvest timer.
CU	Fan motor starter (manual motor starter and contactor). Starts and stops cutter motor. Provides short circuit and over current protection. Stops cutter motor and ice machine in the event of a mechanical or electrical malfunction that results in excessive motor amperes.
E-STOP	Emergency Stop button. When pressed, the button lights and power to the PLC outputs is removed, shutting machine off. Note: Power to the PLC & Touch Screen HMI will remain ON. The button must be manually reset (twist) and the E-Stop fault reset on the Touch Screen.
FC	Fan Control motor starter (manual motor starter and contactor). Cycles the fan motor(s) of air-cooled condenser on and off. Automatically activated by the PLC (air-cooled machines only). Provides short circuit and over current protection. Stops fan motors in the event of a mechanical or electrical malfunction that results in excessive motor amperes.
FU01&02	Overload and short circuit protection for the control circuit transformer.
FU-HMI & PLC	Short circuit protection for Touch screen HMI & PLC
FU-Y0 to Y10	Short circuit protection for PLC outputs
HMI	Touch Screen. Allows you to control the ice machine. This device allows you to view and/or input machine operating parameters, view machine cycle, maintenance, fault history, etc.
P	Pump motor starter (manual motor starter and contactor). Starts and stops pump motor. Provides short circuit and over current protection. Stops water pump motor in the event of a mechanical or electrical malfunction that results in excessive motor amperes.
PLC	Programmable Logic Controls. Controls all sequencing operations of the ice machine.
TB1	Low Voltage terminal block, is for 24VDC & 5VDC connections. Used primarily for PLC Input device, sensor & switch connections. Allow for component wire connections and ease of troubleshooting.
TB2	Main Control Voltage terminal block is for 120/240V control circuit components. Used primarily for PLC Output connections. Allow for component wire connections and ease of troubleshooting.
TB3	Customer Connection terminal block, is of water pump, cutter motor and compressor interlock connections.

Maintenance

To achieve the best performance from the HFO3, follow the maintenance instructions listed in this chapter. For questions concerning the maintenance or upkeep of your equipment, contact Vogt Ice, LLC.

Cleaning

The ice-making section of the Tube-Ice® machine should be cleaned at least twice a year (more often if water conditions cause mineral build-up). Use an approved food-grade ice machine cleaner. The machine is equipped with a cleaning mode, which circulates the cleaning solution through the freezer to remove mineral scale using the water pump. Detailed instructions are also attached to the machine.

To clean your Tube-Ice® machine, follow these steps:

1. Press the **HOME** touch screen button to return to the **HOME** screen. Turn off the machine by pressing the **OFF** button on the **HOME** screen. Allow the machine to cycle off.
2. Press the grid touch screen button to return to the **MENU** screen. press the **CLEAN** touch screen button to access the cleaning submenu. See **Figure 64**.

Figure 64: CLEAN Screen

3. Select the amount of time to clean the machine by pressing the arrows in the **Clean Time** section of the screen. The cleaning cycle time can be set from 15 minutes to 120 minutes.
4. Remove ice from the storage area or cover the storage opening.
5. Shut off the water supply and drain the water tank by opening the drain valve. Remove any loose sediment from the tank.
6. Close the drain valve and fill the water tank with warm water. Close the petcock valve on the water pump during the cleaning period. The tank holds approximately 15 gal (57 L).
7. Add the ice machine cleaning solution to the water tank according to the directions of the cleaning solution manufacturer. Vogt recommends Nu-Calgon® Ice Machine Cleaner, which is a food-grade liquid phosphoric acid.
8. Inspect the water distributors by looking through the transparent freezer cover. It may be necessary to clean the cover before inspecting. If required, remove the cover. Clean and remove any solid particles from the two orifices in each distributor. Clean the rubber cover gasket and reinstall the cover.

9. Press the button next to **Clean Mode** to enter the cleaning mode. The machine will begin with a pumpdown cycle. The operator can choose to bypass the pumpdown harvest cycle by pressing the button next to **Skip Pumpdown Clean Harvest**.
10. After the machine has pumped down, the icon next to **Machine Pumped Down** will turn blue, the compressor will turn off, and the water pump will begin circulating the cleaning solution. See **Figure 65**.

Figure 65: CLEAN Screen – Machine Pumped Down

11. When the machine has completed a cleaning cycle, the icon next to **Clean Completed** will turn blue and the machine will automatically turn off the **Clean Mode**. See **Figure 66**. Repeat cleaning if necessary.

Figure 66: CLEAN Screen – Clean Completed

Note: To exit the cleaning mode at any time during the cleaning cycle, press the button next to **Clean Mode**.

12. After the cleaning cycle is complete, drain and flush the water tank with fresh water.
13. Open the water supply to the machine.

14. Drain, flush tank again, and refill it with fresh water.
15. Clean the inside of the ice storage area and remove any solution that entered during the cleaning process. Remove the cover, if one was installed, over the opening into the storage area.

To return the machine to ice-making operation, follow the steps below:

1. Make sure the water tank drain valve is closed.
2. Turn on the water supply and refill the tank with clean water.
3. When the water tank is full, press the **HOME** touch screen button to return to the **HOME** screen.
4. Press the **ICE** touch screen button to start the machine. The PLC automatically opens the liquid feed valve briefly to re-pressurize the evaporator. No additional action, such as valve adjustment, is required by the operator.
5. Once the evaporator has re-pressurized automatically, the machine will immediately resume normal operation.

Check that the adjustable blowdown petcock valve on the recirculating water pump is adjusted properly. The valve should be adjusted to the minimum rate required to maintain production of clear ice. This should be no more than 1 gal (3.8 L) per minute for most water sources.

Sanitizing

To sanitize your Tube-Ice® machine, follow these steps:

1. Pump down the machine and set the **Clean/Off/Ice** selector switch to the **Off** position.
2. Remove ice from the storage area.
3. Shut off the water supply and drain the water tank by opening the drain valve. Remove any loose sediment from the tank.
4. In a clean container, mix 15 gal (56.8 L) of warm water at 90°F–115°F (32°C–46°C) with 24 oz (0.71 L) of Nu-Calgon® IMS-II Sanitizing concentrate (or equivalent, according to the manufacturer's instructions). The concentration should be 200 parts per million (ppm) (8 oz [227 g] per 5 gal [18.9 L]) of active sanitizing solution.
5. Close the drain valve and fill the water tank with the sanitizing solution.
6. Close the adjustable blow down petcock valve on the water pump.
7. Set the **Clean/Ice/Off** selector switch to **Clean** and press **Start** to circulate the sanitizing solution using only the water pump.
8. Mix an additional 5 gal (18.9 L) of warm water at 90°F–115°F (32°C–46°C) with 8 oz (227 g) of Nu-Calgon® IMS-II Sanitizing concentrate (or equivalent, according to the manufacturer's instructions) in the clean container. The concentration should be 200 ppm of active sanitizing solution.
9. Wearing appropriate gloves, submerge a clean sponge in the sanitizing solution and wipe all inside surfaces of the water tank and tank cover, including the makeup water float valve.
10. With the water pump running, add the additional 5 gal (18.9 L) of sanitizing solution to the water tank. Install the water tank cover and allow the sanitizing solution to circulate for at least 20 minutes.
11. While circulating the sanitizing solution, open the adjustable blow down petcock valve and allow the solution to flow down the drain. With the petcock valve open, allow the water to circulate for at least 3 minutes.
12. Press **Stop** to stop the pump.
13. Drain and flush the water tank with fresh water.
14. Open the water supply to the machine.
15. Drain, flush tank again, and refill with fresh water.
16. To sanitize the inside of the ice storage area, flood the area with the sanitizing solution, making sure to wet all surfaces completely for at least 60 seconds. The concentration should be 200 ppm of active sanitizing solution.

To return the machine to ice-making operation, follow the steps below:

1. Make sure the water tank drain valve is closed and the **Clean/Off/Ice** selector switch is in the **Off** position.
2. Turn on the water supply and refill the tank with clean water.
3. Manually open the thaw gas solenoid valve (D) by running the valve stem in. This increases the pressure in the evaporator, allowing the machine to operate. After approximately one minute, put the D-valve back into the automatic position.
4. When the tank is full, turn the **Clean/Off/Ice** selector switch to the **Ice** position and push **Start**. The machine immediately begins ice production.
5. Check that the adjustable blowdown petcock valve on the recirculating water pump is adjusted properly. The valve should be adjusted to the minimum rate required to maintain production of clear ice. This should be no more than 1 gal (3.8 L) per minute for most water sources.

Water Distributors

The water distributors are located under the freezer cover at the top of the freezer. These distributors may require occasional or periodic cleaning to remove solids and foreign particles accumulated from the makeup water. The frequency of this cleaning operation will depend on the characteristics of the water supply (refer Vogt Ice's water quality bulletin). The cleaning operation is needed when:

- Inside diameter of a large proportion of the ice becomes irregular
- Some of the ice is opaque
- There is a notable decrease in ice capacity

To clean the water distributors:

1. Shut down the machine and remove the freezer cover on the top of the freezer.
2. Remove the water distributors (one per tube) with pliers.
3. Use the pliers on the top part of the distributor with a twisting upward motion, taking care not to damage the orifices or the distributor body.
4. Soak the distributors in ice machine cleaner to remove mineral buildup if needed.
5. Rinse distributors thoroughly before reinstalling, tapping them in lightly with a rubber mallet to seat them in the freezer tubes.

Table 7 shows the part numbers and tube quantities for water distributors on the HFO3.

Table 10: Water Distributor Information

Tube Size in. (mm)	Number of Tubes	Vogt Part Numbers		
		Water Distributor	Freezer Cover	Freezer Cover Gasket
1 (25)	78	12B2185N11	12A2600G01	12A2600G12
1-1/4 (32)	48	12B2185N21		

Water Tank

The production of opaque ice indicates the water in the water tank contains a concentrated number of solids or salts. To remedy this problem, follow the steps below:

1. Shut down the machine.
2. Remove the cover plate on the water tank and open the drain valve.
3. Clean the tank thoroughly by flushing it out with a hose and scrubbing it with a stiff brush. It may be necessary to completely remove the water tank in order to clean all internal surfaces.
4. After cleaning, reinstall the tank if necessary, close the drain valve, and fill the tank with fresh water.
5. Press the **HOME** touch screen button to return to the **HOME** screen and press the **Run Pump** touch screen button to check if the pump is working properly. Air may have collected in the impeller housing, and the pump may have to be stopped and started several times to expel this air.
6. After the pump is checked for proper flow, press the **Run Pump** touch screen button to turn the pump off.
7. Press the **ICE** touch screen button to resume ice production.

Water-Cooled Condensers

The interval in which condensers require cleaning varies. Some installations seldom need cleaning, while others may require cleaning at least once a year or even several times a year.

Proper operation of cooling towers increases the interval between cleaning considerably. Check the tower overflow rate frequently. If a tower operates with insufficient overflow (nominal 1.5 to 3 gph [5.7 – 11.4 Lph], depending on water quality), the resulting mineral concentration in the water can cause rapid and heavy fouling inside the condenser tubes, requiring excessively frequent cleaning. Also, these conditions often lead to severe corrosion.

Chemical additives, including those used to stop algae and related growths, should be obtained only from a reputable, established supplier. Always follow manufacturer's directions. Excessive treatment of the water can cause more harm than good, and the condensers, pumps, piping, and towers themselves may be damaged.

Double check the system to make sure that fouling is actually causing the trouble. High head pressure alone does not mean a fouled condenser.

Before cleaning, always check for the following conditions:

- Non-condensables in the system or a faulty head pressure gauge—Check standby pressures against refrigerant tables.
- Incorrectly set or defective water regulator valve—Check setting and operation.
- Partly closed compressor discharge service valve—Check the stem position to confirm that it is backseated.
- High-temperature water entering the condenser. Check the cooling tower fan and system.

If none of these problems exist, or they have been resolved, determine the temperature difference between the water leaving the condenser and the refrigerant condensing temperature (saturation temperature [refer to

Qty	Part Number	Description
	See Table 9, Page	**Control Panel Parts**
	See Table 14, Page	**Cutter Parts**
1	12A2600G01	Gasket for freezer cover
1	12A2600G12	Gasket for water tank
1	12A2900M0508	Cutter Motor, 1/2 HP
1	12A4020G01	Water Pump, 1.5 HP
1	12A4200A0505	5/8" Liquid feed solenoid, Sporlan
1	12A4200C0503	Thermal Expansion Valve
2	12A4200H0401	Make-up water float valve
1	12A7509E12	Crankcase heater, (Copeland Discus Compressor)
78	12B2185N11	Water Distributors (1”)
48	12B2185N21	Water Distributors (1 1/4”)

Table 22: Pressure-Temperature Chart, corresponding to the head pressure). If this difference exceeds 10°F (5.6°C), cleaning is required because the difference indicates that good heat transfer is not occurring.

If the difference is less than 8°F (4.5°C), something other than a fouled condenser may be the cause of high head pressure. During normal operation, the temperature difference stays between 5°F and 10°F (2.8°C and 5.6°C) regardless of water inlet temperature, when the water flow is regulated by a pressure-operated water valve. If the difference is less than 5°F (2.8°C), restricted water flow or a low supply pressure is likely. A restriction can be caused by foreign matter in the condenser, but it is likely to be elsewhere in the system.

Draining

Draining of water-cooled condensers is recommended in climates where units may be left exposed to ambient temperatures below 32°F (0°C). Although condensers usually have a vent and drain fittings, the opening of these fittings is not sufficient for a natural gravity flow of water. Water is thus retained in the tube due to the surface tension between the tube and the water and the normal curvature between tube supports.

Experience shows that as much as 20% of the water in the condenser is retained. To break the surface tension between the water and the tubes and to drain all tubes completely, the condenser must be tilted a minimum of 5 degrees. Whether water left in the tubes causes damage depends on how quickly the water freezes and its location inside the condenser. Condenser manufacturers recommend that each tube is blown out individually with compressed air to remove the water. Alternatively, a minimum of 25% ethylene glycol in the system will also prevent the water from freezing, which can rupture the tubes.

Chemical Cleaning

Vogt Ice, LLC, makes no recommendation for any particular chemical preparation because the same chemical may not be effective in all circumstances.

CAUTION The warranty on condensers is void if they are damaged by improper cleaning tools or methods. If harsh chemicals are used, be sure to follow the manufacturer's recommendations regarding safe handling of those solutions.

Follow these directions and precautions when cleaning:

- Use only preparations from an established, reliable source.
- Follow directions exactly, particularly regarding amounts to use, and flushing or neutralizing procedures after cleaning.
- Close the water supply to the stop valve and remove the condenser water regulating valve.
- Circulate the solution through the condenser until it is considered clean (no excess scale on tubes or tubesheets).
- Flush the condenser according to the directions provided by the chemical manufacturer.
- Reinstall the water regulating valve and associated piping.
- Open the water-supply stop valve and check for leaks.

Mechanical Cleaning

The following steps should be followed during mechanical cleaning.

1. Close the stop valve in the water supply line.
2. Drain the water from the condenser.
3. Remove the water regulating valve and associated piping from the condenser.
4. Remove the nuts, water plates, and gaskets from both ends of the condenser.
   - If the gasket does not lift off with the end plate, do not attempt to pry it off. This can damage the sealing surface, causing a water leak. To free a sticking gasket, replace the water plate and tap the outside face of the plate with a rubber mallet or block of wood. After a few taps, the gasket will spring free and slip off with the water end plate.
5. Rinse gaskets with running water and use a rag or soft brush to remove foreign matter.
   - Rust, scale, and dirt will not stick to the gasket material.
6. Use clean water and a rag or soft bristle brush to clean the inside of the water end plates and the outer tube sheet surfaces.
   Note: Never use a wire brush or strong caustic on these surfaces.
   - These surfaces have been coated with a special material that will give years of protection against corrosion unless damaged.
7. Flush the condenser tubes clear with air, water, or a piece of rag on the end of a stick or wire. This will sufficiently clean the tubes in many cases.
   - If the inside surfaces are smooth, further cleaning is not necessary, even though the surfaces may be discolored. Do not attempt to achieve a bright copper finish on the tubes as they will quickly discolor when in service. The condenser is designed to handle moderate fouling on these surfaces.
   - If a rough coating remains on the insides of the tubes after flushing and wiping, further cleaning is required. The color will vary depending on water conditions. In these circumstances, use a nylon, brass, or copper brush to clean the tubes. Do not use any tool that will score, mark, flake, or otherwise cut into the tubes.

Compressor Lubrication

The HFO3 is built with a semi-hermetic Copeland Discus Compressor (CSH). This compressor requires synthetic refrigeration compressor oil to reduce friction, Synthetic Polyol Ester (POE) 150 viscosity.

When starting and charging the unit, the oil in the sight glass of the compressor crankcase should be watched carefully for the first hour to ensure that the proper amount of oil is remaining in the crankcase (between the lines on the sight glass). The oil level may be low on initial start-up if electrical current to the crankcase heater was interrupted.

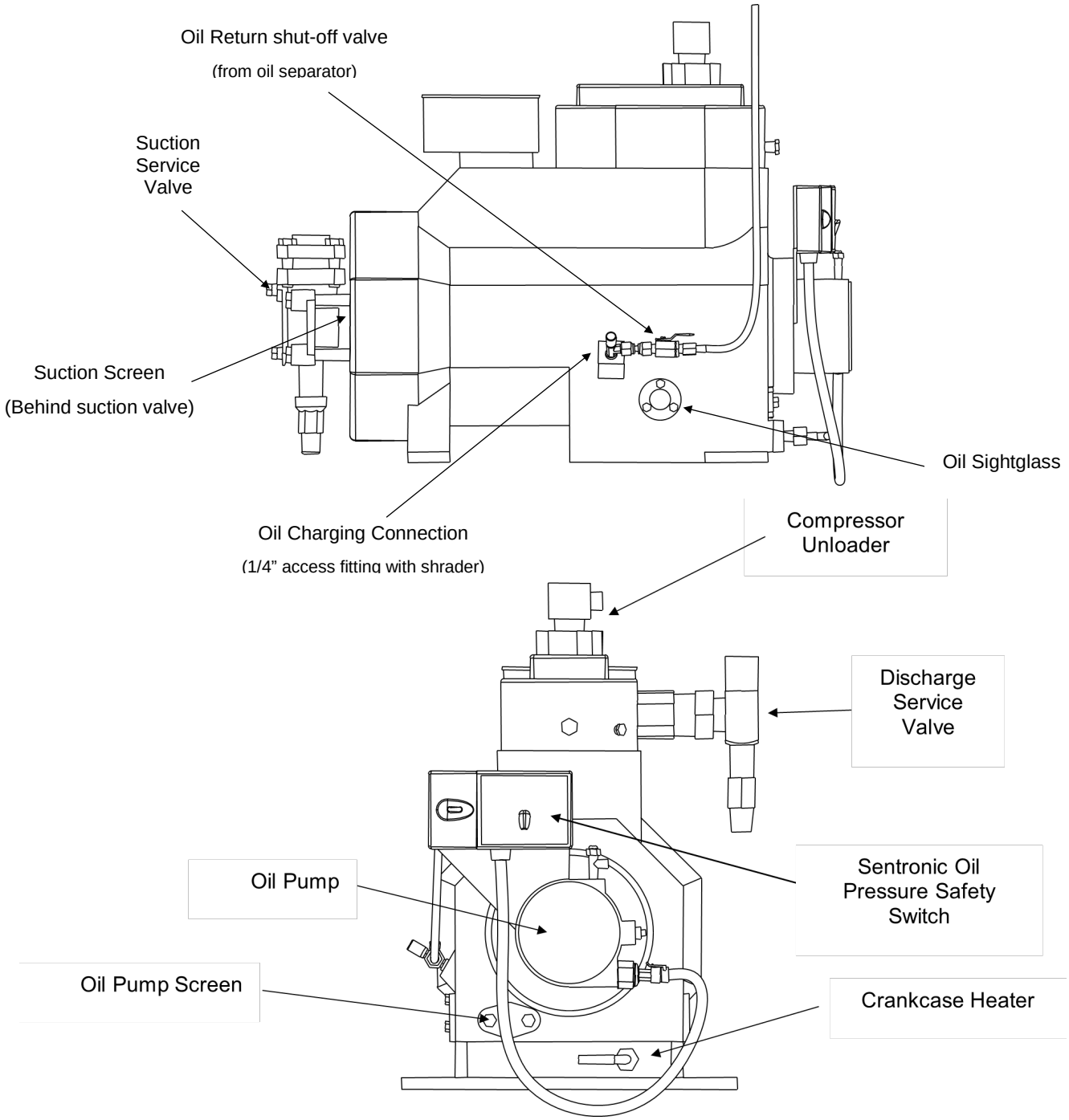

Figure 67: Copeland Discus Compressor (3D)

If there is a power interruption to the crankcase heater, the heater should be energized for at least two hours before restarting the machine. This allows for evaporation of refrigerant that may have condensed in the crankcase during the shutdown period. If the level is low after start-up, it should begin to return after a short period of operation.

The oil level should be checked frequently, particularly during the start-up operation, to make sure a sufficient amount of oil remains in the crankcase. While it is important to observe the oil splash during operation, the true level can be obtained only when the compressor is stopped. With the compressor idle, the oil level should be at a height of 1/4 to 3/4 of the sight glass but never out of sight above it.

The machine is shipped with the proper amount of oil for operating water-cooled systems. However, it may become necessary to add some oil if new refrigerant is added to the system at a later date. Generally, air-cooled machines will require additional refrigerant and oil to compensate for long piping runs to the condenser.

The tables below detail the type of oil required for the HFO3's screw compressor. Using any other types of oil will void the machine warranty.

Table 11: Required Compressor Lubricants and Capacity

Refrigerant	Required Lubricants	Lubricant Type	Water-Cooled Oil Charge oz (ml)
R-452A	Synthetic Polyol Ester (POE)	150 Viscosity	305 (30)

Lubrication of the Cutter Motor Gear Reducer

The oil level for the gear reducer should be checked to see if a leak exists. The oil level should be at the bottom of the plugged opening in the side of the gear housing. Use Mobile 600W cylinder oil or equivalent. Change the oil once a year.

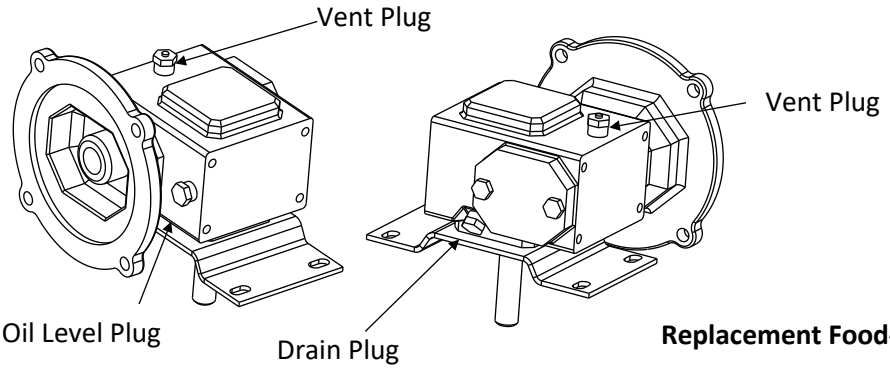

Gear Reducer (10:1)

Part #: 12A4030R12

Replacement Food-Grade Oil:

- Part #: 19T3020C01
- Texaco Cygnus 220
- Oil Capacity: 8 oz (227 g)

Figure 68: Cutter Motor Gear Reducer

Preventive Maintenance

A preventive maintenance program is recommended for optimum and efficient operation and a long service life. It is recommended that you or a delegated employee make a daily visual check of your Tube-Ice® machine. When you are aware of the proper operating conditions and observe them on a daily basis, changes in these conditions can alert you to changes in the operation of the machine that may require maintenance long before a service situation arises.

The following schedule is suggested as a minimum:

Daily Checklist

- ☐ Is the machine running, or is the bin full?
- ☐ Bin doors are closed.
- ☐ Thermostat bulb is in the bracket.
- ☐ All ice discharges during harvest period.
- ☐ Machine and components are clean.
- ☐ No unusual noises.
- ☐ Operating pressures (suction, discharge, hot gas, oil) are within acceptable limits.
- ☐ Ice quality (clarity and uniformity) is correct (refer to water conditioning bulletin).
- ☐ Harvest period continues at least 30 seconds after the last ice is out.
- ☐ Compressor oil level is appropriate.
- ☐ Refrigerant operation level is within acceptable limits.
- ☐ The frost pattern on the freezer shell extends to the bottom of the suction connection.
- ☐ Water float valve is properly adjusted (water should not pour out of the tank during operation or cause the water pump to cavitate).

Weekly Checklist

- ☐ Weekly or Monthly Calibration and operation of all controls (high- and low-pressure switches, oil pressure switch, etc.) are within limits.
- ☐ Cooling tower spray nozzles and pump suction screen are free of scaling and algae (consult water treatment suppliers for corrective measures).
- ☐ Water distributors at the top of the freezer are free of scale accumulation.
- ☐ Remove solids that have collected in the water tank.
- ☐ Check all motor drive units (compressor, pump motors, cooling tower fan, and pump, etc.) for abnormal noise and/or vibrations.
- ☐ Observe one complete ice making cycle, record data, and compare with the **Warranty Registration/Start-Up Form**.

Monthly or Yearly Checklist

- ☐ Check entire system for leaks.
- ☐ Check system for leaks after 400 hours or 4 weeks of operation.
- ☐ Drain water from the condenser and cooling tower and check condenser tubes. Inspect for damage by corrosion or scale.
- ☐ Remove all rust from all equipment, clean, and paint.
- ☐ Check all motors for shaft wear and end play.
- ☐ Check operation and general condition of all electrical controls, relays, motor starters, and solenoid valves.
- ☐ Observe one complete ice making cycle, record data, and compare with the **Warranty Registration/Start-Up Form**.
- ☐ Change oil in cutter motor gear reducer.

Warning: Pressure relief valves must be replaced after 5 years of service. Before replacing relief valves, review requirements per current local and national codes. Valve replacement should be performed only by service personnel experienced and certified in refrigeration and qualified to work with high-voltage electrical equipment. If a relief valve discharges, the valve must be replaced before putting the machine back into service. Relief valves do not properly reseat after a discharge event. Contact Vogt SuperCare Customer Service for replacement valves.

Preventive Maintenance Form

This form can be removed and duplicated for record keeping. This page is a complete Preventive Maintenance Schedule that should be performed every 90 days. The Preventive Maintenance page may be copied and given to your service person. It should be signed, dated, and returned to you for permanent record.

Date: **Model No.:** **Serial No.:**

The following service was performed and checked:

	Service
☐	Last maintenance performed (approx. date) ____ / ____ / ____
☐	Scale condition of water tank and tubes (good - fair - poor)
☐	All drains freely draining (water tank, drip pan, ice bin)
☐	Water distributors cleaned
☐	Ice machine cleaner circulated through system
☐	Condenser clean (water-cooled, if applicable)
☐	Voltage at machine (actual reading) _____, _____, _____
☐	Compressor amps (halfway through freeze cycle) _____, _____, _____
☐	Cutter motor amps while cutting ice _____, _____, _____
☐	Water pump amps while pump running _____, _____, _____
☐	AC condenser motor amps (if applicable) _____, _____, _____
☐	Crankcase heater heats oil
☐	Refrigerant leaks (okay - high - low)
☐	Leak-checked entire system; number of leaks found _____
☐	Compressor oil level in sight glass (1/4 - 1/2 - 3/4 - low - high)
☐	Gear reducer oil level (correct level - low level)
☐	Low-pressure switch setting, psig _____
☐	High-pressure switch setting, psig _____
☐	Bin stat(s) installed and operating properly
☐	Makeup water float valve adjusted properly (pump not cavitating, water tank not overflowing)
☐	Adjustable blowdown adjusted for clear ice
☐	Suction psig at end of freeze CYL_____ CRU_____
☐	Suction psig during harvest (high / low) CYL_____ CRU_____
☐	Discharge psig at end of freeze CYL_____CRU_____
☐	Ambient temperature at machine (°F/ °C)
☐	Outside ambient temperature (at air-cooled condenser or cooling tower, °F/ °C)
☐	Makeup water temperature (°F/ °C)
☐	Freeze period time (minutes)
☐	Harvest period time (minutes)
☐	Total cycle time (Freeze period time + harvest period time, minutes)
☐	First ice out time (seconds)
☐	Last ice out time (seconds)
☐	Ice weight per cycle (lb/ kg)
☐	24-hour production capacity ($\frac{Ice\ weight\ per\ cycle}{Total\ cycle\ time} \times 1440$)

Comments:

Signature:

Troubleshooting

Warning: Only service personnel experienced and certified in refrigeration and qualified to work with high-voltage electrical equipment should be allowed to install or work on this Tube-Ice® machine.

DANGER Follow all lock-out and tag-out procedures before servicing any electrical equipment.

Note: With the exception of bin control, anytime the machine stops, it must be manually restarted by pushing the **Start** button. If the machine stops during a freeze period, it restarts in a thawing (harvest) period.

This section lists potential problems and suggests solutions for this Tube-Ice® machine. Some of the problems and solutions apply to optional equipment supplied by others and may vary. Many problems are easy to solve if you know what caused them. If your problem is not covered in this section, call the factory directly at 1-502-635-3000 or 1-800-853-8648.

Your machine's electrical system has several built-in safety and overload protection features to stop operation when a single component fails or there is a problem from an outside source, such as a power supply. Make sure all auxiliary equipment is connected to safety and overload circuits so all related equipment is protected.

Always check the machine thoroughly after addressing the problem to prevent the same cause from reoccurring.

Machine Not Running

Possible Causes	Possible Solutions
Power failure and intermittent power interruption	Check electrical fused disconnect or circuit breaker supplying power to the machine. If power has been off for a period of time, make sure the compressor crankcase heater is energized, the crankcase is warm (100 - 110°F [38 - 43°C]), and there is no liquid refrigerant in the crankcase before running the machine. Push **Start** to initiate startup in a thawing period.
3.0-amp circuit breaker in the control panel trips	Check compressor crankcase heater, coils of relays, contactors, starters, solenoid valves, and thawing timer for a ground. Repair or replace any defective part and replace fuse. Make sure there is no liquid refrigerant in the compressor crankcase before restarting the machine.
High/low safety pressure switch trips	If the machine stops because the pressure is too low, the switch resets automatically when the pressure increases to the appropriate setting. If the machine stops because the pressure it too high, the switch automatically resets after the pressure drops below the appropriate setting. Check switch settings. Push **Start** to start the machine in a thawing period. Check the head pressure during the next freeze period. Refer to Chapter 9, (High/Low Pressure Switch).
Low oil pressure switch tripped	If the machine stops by low oil pressure cutout, the switch will have to be manually reset. Check the crankcase oil level. Restart the machine by pushing the "Start" push button. Check the oil level and net oil pressure (net oil pressure = pressure reading at the oil pump end bearing housing minus suction pressure). The oil level should be 1/4 - 3/4 level in the glass. If above 3/4, drain some oil out. See page 9-8, (Oil Pressure Sensor).

Machine Not Running, cont.

Possible Causes	Possible Solutions
Cutter motor overload trips	Check and clear the cutter area and ice discharge path of all ice. Check voltage and overload range adjustment against motor rating. Reset the manual motor starter, reset the fault on the touch screen and restart the machine by pushing the **Start** touch screen button. Check the cutter operation and motor amp draw. If tripping repeats, but there is no ice clogging the cutter area or ice discharge path, check the cutter bearing for wear, the gear reducer for resistance, and the motor for defects or single phasing.
Pump motor overload trips	Check voltage and overload range adjustment against motor rating. Reset the manual motor starter, reset the fault on the touch screen, press the **Run Water Pump** touch screen button. Check the pump operation and motor amps. If tripping repeats, check for a defective overload, defective motor, or single phasing.
Bin thermostat or bin level control stops machine	Adjust or replace the bin thermostat or level control. Make sure the bin thermostat bulb or level control is located properly in the bin. Refer to ***Error! Not a valid result for table.***.
Defective component in control panel	Check for open circuit. Refer to Figure to identify parts. Replace defective part, restart machine, and check power supply and current draw.

Freeze-Up from Extended Freeze Period

Possible Causes	Possible Solutions
Freezer pressure setting too low	Adjust freezer pressure setting in the HMI.
Water tank drain valve or makeup water solenoid open too long	Close, repair, or replace valve as needed.
Thaw gas solenoid valve leaking during the freeze period	Check the manual opening stem to make sure it is in the automatic position (stem screwed out). Check for leakage through the valve by measuring the sound and temperature differences. Close the stop valve at the receiver to confirm leakage. Repair or replace the valve as needed.
Liquid line solenoid valve (A) is stuck open	Check to make sure the valve is not in the manual open position. Disassemble valve and inspect for debris. Clean valve if required.

Freeze-Up from Ice Failing to Discharge

Possible Causes	Possible Solutions
Insufficient heat for thawing because of low condensing pressure, non-condensable gases (usually air) in system, low refrigerant charge, or thaw gas pressure switch adjusted too low	The head pressure should be maintained at approximately 250 psig (17.2 bar) for 452A, which relates to 105°F (37.8°C) by adjusting the water regulating valve (water-cooled units) or fan cycling switch (air-cooled units). If non-condensable gases are present in the refrigerant, the saturated temperature will not relate to the pressure reading at the receiver. The refrigerant level in the receiver should be near the operating level (marked by the sticker) at the end of a freezing period to provide enough volume for harvesting. (1-in. [2.54 cm] = approx. 5.5 lb. [2.5 kg] of 452A).
Harvest time too short	Check the harvest timer setting on the HMI which should be adjusted to allow all the ice to clear the cutter and ice discharge opening with at least 30 seconds to spare.
Cutter or cutter disc does not turn	Check cutter reducer and drive gear for proper operation and alignment. Check for broken cutter disc or drive pin and replace as necessary.
Ice backs up into cutter or discharge opening, jamming cutter	Ice mushy due to concentration of solids in the water tank. Perform "Cleaning Procedure” and check automatic and adjustable blowdown. If the machine discharges ice into a chute, it should slope at an angle of 30 degrees for cylinder ice, and 45 degrees for crushed ice. Check bin stat or level control to make sure it will stop the machine before ice backs up into the cutter.
Extended freeze period	Check freezer pressure setting adjustment on the HMI referring to Table 17 Normal Operating Criteria.
Compressor not unloading	Check compressor amps during harvest. A noticeable drop in amperage should occur. Check unloader solenoid coil. If coil is okay, replace unloader head assembly.
Harvest time too short	Check the harvest timer setting on the HMI which should be adjusted to allow all the ice to clear the cutter and ice discharge opening with at least 30 seconds to spare.

Poor Ice Quality

Possible Causes	Possible Solutions
Excessive concentration of solids in the water tank, indicated by a build-up of mineral deposit on the sides and bottom of the tank	Clean the water tank. Remove the freezer cover and clean the water distributors. Adjust continuous blowdown.
Insufficient water supply indicated by a low level in the tank	Check water pressure—30 psig [2 bar] is the recommended minimum. Check for a water line restriction, partially closed valve, or defective makeup water float valve. Make sure the water tank drain valve is closed.
Water pump rotation wrong direction	Check rotation by referring to the arrow on the pump housing and reverse two wires at the motor if necessary.
Low refrigerant charge	Check refrigerant level mark on the receiver and on the red portion of the gauge glass guard. Perform a pump down if necessary. Keep the gauge glass cocks closed when finished checking the level.
Insufficient blowdown during harvest	Check for proper operation of the siphon vacuum break valve. Check for restrictions or traps in the water tank drain assembly.

Low Ice Capacity

Possible Causes	Possible Solutions
Low refrigerant charge	Check for and repair leaks. Add refrigerant.
Restriction in liquid line	Check for a partially closed valve or an obstruction at the dryer, strainer, solenoid valve, or expansion valve. The liquid line will normally have frost on the downstream side of a restriction, especially as the suction pressure decreases.
Thaw gas solenoid valve leaking during the freeze period	Check the manual opening stem to make sure it is in the automatic position (stem screwed out). Check for leakage through the valve by measuring sound and temperature differences. Close the stop valve at the receiver to confirm suspicion of leakage. Repair or replace the valve as needed.
Water distributors at top of freezer are clogged	Remove freezer cover and clean the distributors. Refer to *Water Distributors* in Chapter 7.
Not enough water for ice making	Check water pressure (30 psig [2 bar] minimum is recommended). Check for a water restriction in the supply line or at the makeup water float valve.
Makeup water float valve stuck open, adjusted too high, or water tank drain valve open or leaking	Repair, replace, or adjust float valve as needed. Close, repair, or replace water tank drain valve as needed.

Low Ice Capacity, cont.

Possible Causes	Possible Solutions
Controls for regulating freezing and thawing periods not adjusted properly	For highest capacity, cylinder ice should have a small hole and crushed ice should be about 3/16-in. [4.8-mm] thick. Adjust the freezer pressure setting and harvest timer as needed. Refer to Chapter 9
Excessively high head pressure	Check water regulating valve or fan control adjustment. Clean the condenser if needed. Check refrigerant table for appropriate pressures and temperatures.
Warm makeup water for ice making	Capacity of the machine is proportional to the water temperature during ice making. Warmer water will reduce the ice-making capacity. Refer to HFO10 Capacity Chart.
Drain valve open	Close drain valve.
Low refrigerant charge	Check for and repair leaks. Add refrigerant as needed.
Restriction in liquid line	Check for a partially closed valve, or for an obstruction at the dryer, strainer, solenoid valve, or expansion valve. The liquid line will normally have frost on the downstream side of a restriction, especially as the suction pressure decreases.

High Head Pressure (Water-Cooled Machines)

Possible Causes	Possible Solutions
Misadjusted or defective water regulating valve	Adjust or replace valve. Never adjust the valve stem as far open as it will turn, because it will not close when the head pressure drops.
Insufficient water supply	Check size of water line and pump output at the condenser. Refer to the specification sheet for water requirements. Check cooling tower sump level and makeup water supply.
Cooling tower needs maintenance	Check cooling tower fan belt and tighten or replace as needed. Check spray nozzles and sump screen and clean as needed.
Non-condensable gas (usually air) in system	Check refrigerant tables for appropriate pressures and temperatures. If non-condensable gases are present, perform a total pump down. Let stand for at least 6 hours, allowing non-condensable gases to collect in the upper part of the receiver. Evacuate the freezer and attach a recovery unit to the top receiver purge valve. Open the valve and recover the vapor for about five minutes. When the freezer is evacuated, open the thaw gas solenoid valve (D) manually for about 15 seconds, letting the top vapor in the receiver blow into the freezer. Close the solenoid valve and evacuate the freezer again. Evacuate to 500 microns and restart the machine.
Fouled (dirty) condenser	Visually inspect condenser and clean as necessary.
Misadjusted or defective water regulating valve	Adjust or replace the valve. Never adjust the valve stem as far open as it will turn, because it will not close when the head pressure drops.

High Head Pressure (Air-Cooled Machines)

Possible Causes	Possible Solutions
Condenser fan(s) not running; defective motor, fan control switch, fan contactor, or tripped fan motor overload	Replace any defective parts. Check condenser fan disconnect for thrown switch or blown fuse. Replace fuse and reset switch. If the condenser is split, check the normally open solenoid valve to make sure it is open. Also check the fan sequencing thermostats and fan motor contactors to make sure they are functioning properly.
Dirty condenser causing restricted air flow	Visually inspect condenser and clean as necessary.
Non-condensables (usually air) in the system	Follow same procedure as specified for removing non-condensable gases from water-cooled machines and evacuate the air-cooled condenser as well.

Servicing Operations

Adjustable Blowdown (for Clearer Ice)

A petcock valve, located at the overflow level of the water pump, provides adjustable blowdown from the water tank during the freezing period. The petcock is set at the factory to discharge enough water during the freeze period to produce clear ice. After installation, the petcock should be adjusted to the minimum rate (open as little as possible) required to maintain clear ice, and checked after a few days of ice making to confirm ice is still clear. Figure 63 shows the overall blowdown assembly.

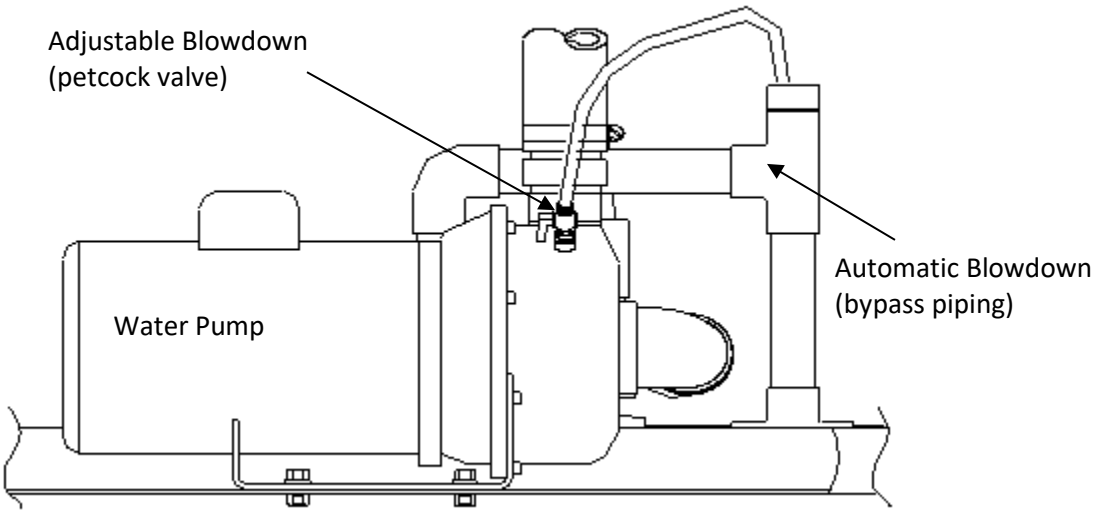

Figure 69: Water Pump/Blowdown Assembly

Automatic Blowdown

The automatic blowdown or harvest period eliminates or reduces the need for frequent flushing or cleaning of the water tank. This blowdown also removes accumulated salts or solids in the water as a result of the freezing action. During the harvest period, water returning from the freezer raises the tank level and causes an overflow of water. The overflow creates a siphon to remove a fixed amount of water (20% of tank capacity) from the tank.

Makeup Water Float Valve

The makeup water float valve maintains the proper pumping water level for ice making. The valve is set to maintain an appropriate level (high enough to prevent pump cavitation and low enough to prevent tank flooding) in the water tank during the freezing period so there will be a quantity of bypass or blowdown only during the thaw mode. The water level during the freeze mode must always be below the bypass piping to prevent excessive waste of cold water; otherwise, loss of ice capacity results.

If cleaning the float valve is required, close the stop valve in the makeup water line to the machine and remove the float valve. After the valve is cleaned and reinstalled, ensure the proper water level is being maintained. After the machine stops, and the water in the tank reaches its normal level, there should be no water flow through the float valve or drain bypass.

Installation of a 40-mesh strainer in the water supply line is recommended. The strainer protects the float valve from dirt or solids in the water and helps reduce the amount of cleaning.

Hand Expansion Valve

The hand expansion valve is located after the liquid line solenoid valve (A). This should be set at a point where the float switch is open for a length of time approximately equal to the time it is closed. The factory setting is about three turns closed from full open.

Freezer Pressure Setting on Touch Screen HMI

The **Freezer Pressure Setting** controls the freezing time period for the production of cylinder or crushed ice. It is adjusted on the **Quick Setup** screen when viewing the **Home** screen on the HMI.

This setpoint is selected at the factory to produce ice of recommended thickness. Refer to the Certificate of Test, which was provided with the machine for a sample set of pressure readings with corresponding time periods and water temperatures. Do not make adjustments until several ice discharging cycles have been completed.

Low Pressure Safety on Touch Screen HMI

The **Low Pressure Safety** will shut the ice machine off if the compressor suction pressure drops below the setpoint. The factory setpoint for the low-pressure safety is 4 psig (0.27 bar). The setpoint where the machine can restart is 20 psig (1.4 bar).

High Pressure Safety on Touch Screen HMI

The **High Pressure Safety** will shut the ice machine off if the compressor discharge pressure reaches the setpoint. The factory setpoint for the maximum safe pressure is 200 psig (13.8 bar). The setpoint where the machine can restart is 145 psig (10 bar).

Head Pressure Control

For R-513A, the head pressure should be maintained at 145–155 psig (10–10.6 bar) during the freeze cycle. This pressure can be checked at the compressor discharge valve. It is also displayed on the **Home** screen of the HMI.

Fan Cycling Pressure on Touch Screen HMI

For air-cooled machines, the condenser fan cycling is controlled by the PLC and adjusted on the **Quick Setup** screen when viewing the **Home** screen on the HMI. **ON** sets the pressure at which the fans turn on, **OFF** sets the pressure at which the fans turn off. Best performance is achieved with a head pressure range of 245–265 psig. See **Error! Reference source not found.**

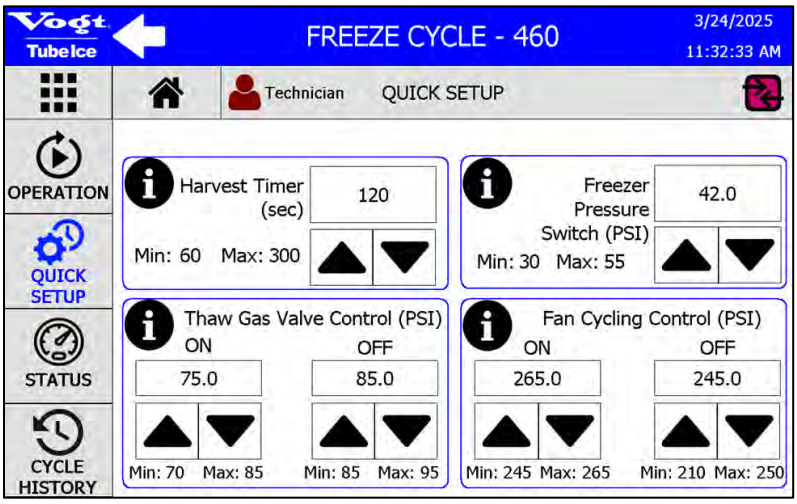

Water-Regulating Valve (Water-Cooled Machines)

A water-regulating valve located in the condenser water inlet controls the water flow through the condenser. This valve should be adjusted to maintain a head pressure of 130–140 psig (9–9.7 bar) for R513A. Increasing the water flow will lower the head pressure, while decreasing the water flow will raise the head pressure. The valve is set at the factory during testing. The valve stem should not be opened all the way because it will not close completely when the head pressure drops below its setting.

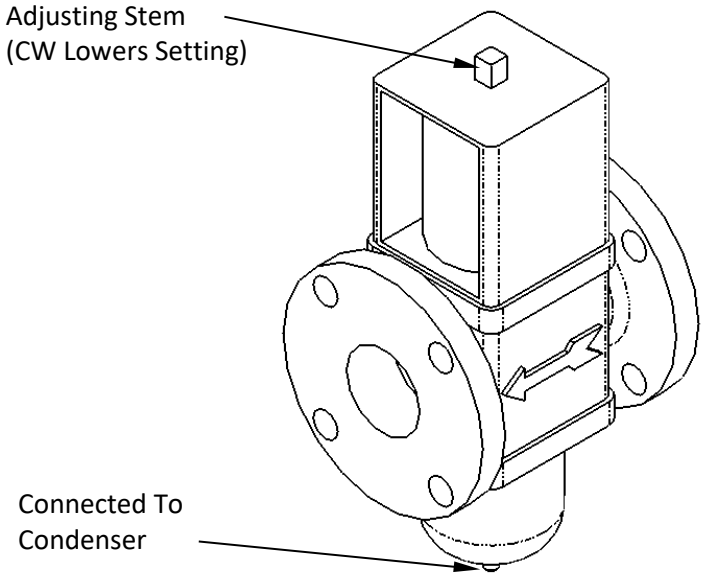

Figure 70: Water Regulating Valve

Cleaning Water-Cooled Condenser

The shell and tube condenser require occasional cleaning to maintain peak performance.

Compressor Motor Protection—Coresense

- Discus compressors are supplied with CoreSense Protection. CoreSense replaces the Sentronic Oil Pressure Safety Module on all Discus compressors and the Electronic Motor Protector Module on 4D & 6D compressors. Note: 2D & 3D compressors will continue to have Internal Line Break overload protection.
- The oil pressure monitoring portion of the CoreSense will act very similar to the Sentronic Oil Pressure Safety switch. A current transformer (CT) in the compressor junction box determines when the compressor is running and starts monitoring oil pressure. Note: Wire "T1" passes through CT before connecting to compressor terminal.
- The CoreSense module has power applied at all times to allow for more detailed fault notification. An LED will flash when a fault occurs. The number of flashes will identify the fault condition.

# of Flashes	Condition
1	Oil Pressure
2	Motor Protection Trip
3	Discharge Temperature (optional add-on)
4	Current Sensor Fault
5	Communication Error

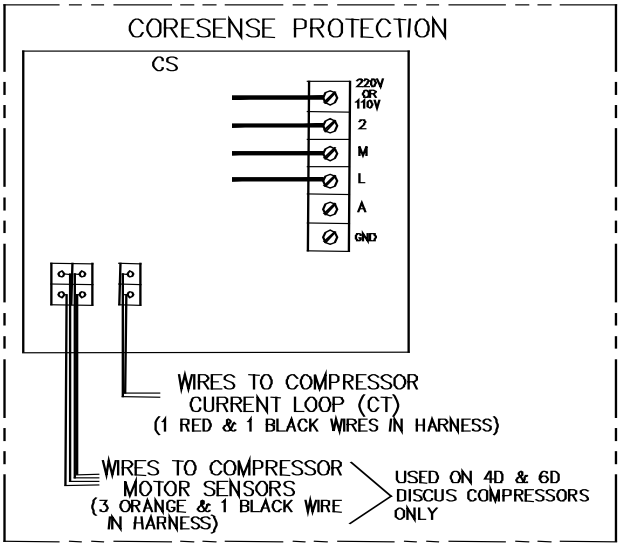

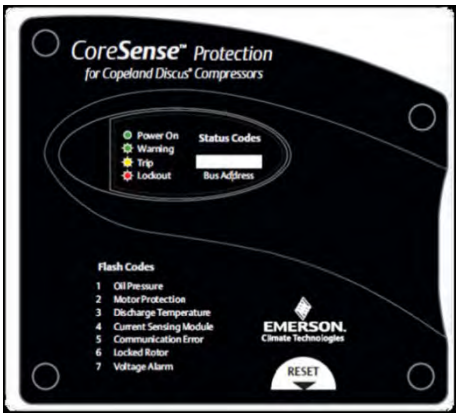

Figure 71: **CoreSense Protection**

Description		Vogt #	Copeland #
Crankcase Heater	100 W (insert type)	12A7509E12	518-0028-01
CoreSense Protection	Module and Sensor	12A2117A07	943-0109-00
Oil safety – sensor only	For Sentronic, Sentronic 3 or CoreSense	12A2117A0501	998-0162-00

Compressor Motor Burnout

Compressor motor burnout can have several causes, including:

- **Low Line Voltage**. A compressor motor is designed to operate within the range of ±10% of its nameplate voltage. Low voltage requires the motor windings to carry more current at the same compressor load. When this current becomes too high or is applied for an extended period, the motor windings overheat, resulting in a failure.
- **Loss of Refrigerant**. The semi-hermetic compressor motor is maintained at proper operating temperature by passing cool suction gas over the motor windings. A loss of refrigerant can cause the winding to overheat, resulting in a failure or burnout.
- **High Head Pressure**. The system is designed to operate at 130 psig (9 bar). Excessive head pressure increases the refrigeration load on the compressor. This increase can cause the windings to overheat, resulting in a failure or burnout.
- **Moisture**. Moisture in contact with refrigerant oil and the presence of heat will form hydrochloric or hydrofluoric acid. The acid will destroy the insulation on the motor windings, causing a short circuit, which can increase motor temperatures in excess of 3,000°F (1,649°C). This extreme temperature will also create a sludge or black residue in the system.
- **Mechanical Failure**. Mechanical failure has been determined to be a major cause of motor burnout. Bearing wear or wipe-out may allow the rotor to drag, overheating the windings and causing a burnout.

Whenever a compressor fails because of a motor burnout, it is important to thoroughly clean the system before replacing the damaged compressor, or a new compressor may also become damaged.

Compressor Crankcase Heater

When electrical power is supplied to terminals L1, L2, and L3 of the control panel, the crankcase heater is energized when the machine is not operating. It is de-energized when the compressor contactor is energized.

In case of a power interruption, or crankcase heater failure, the crankcase heater should be powered on for a minimum of 2 hours before restarting machine manually. See **Figure 72** for location on the machine.

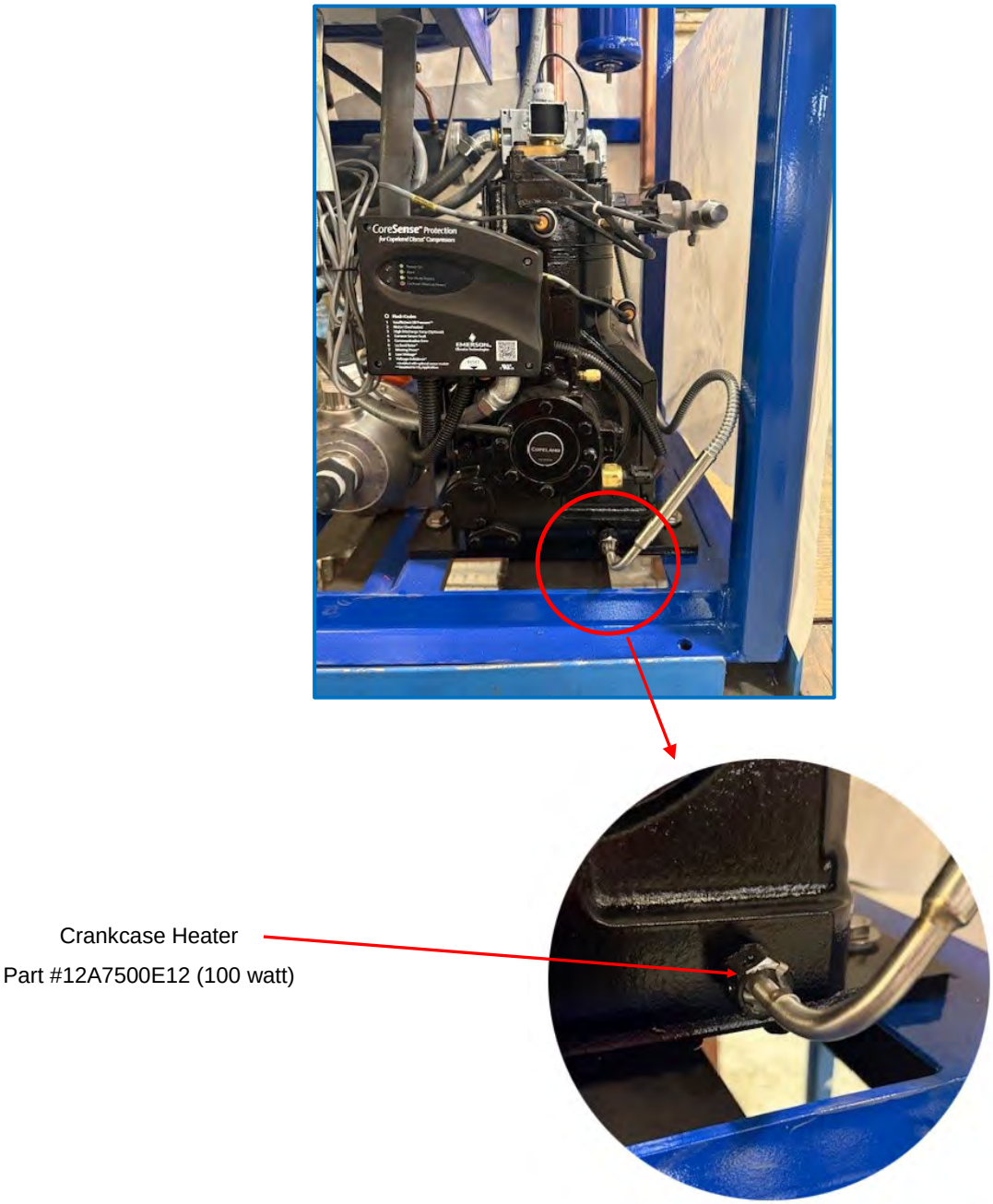

Figure 72: **Copeland Discus Compressor Crankcase Heater (3D shown)**

Oil Separator

A coalescent oil separator is used to separate the oil from the discharge gas and return it to the compressor

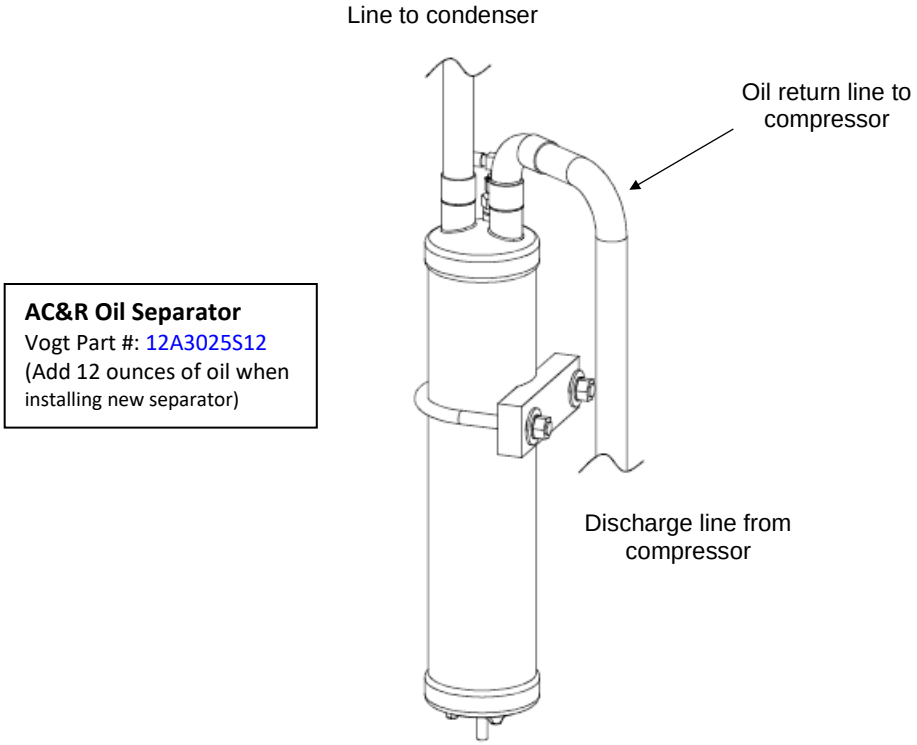

Figure 73: Oil Separator

Control Circuit Protection

The electrical control circuit of the machine is protected by a 2-pole, 3A circuit breaker. If the breaker opens, the machine stops immediately. Before opening the panel to reset the breaker, open the disconnect switch to the machine first.

When power is restored to the machine, follow the prompts on the HMI to restart the machine.

Harvest Timer

The **Harvest Timer** governs the length of the ice thawing period.

The **Harvest Timer** is set from the factory for a time that is at least 30 seconds longer than the time required to harvest the entire discharge of ice. Should it become necessary to change the duration of a thawing period, the **Harvest Timer** can be adjusted through the **Quick Setup** submenu from the **Home Screen** of the HMI. After adjustment, verify the new setting is at least 30 seconds longer than the time required for the last piece of ice to be discharged from the machine.

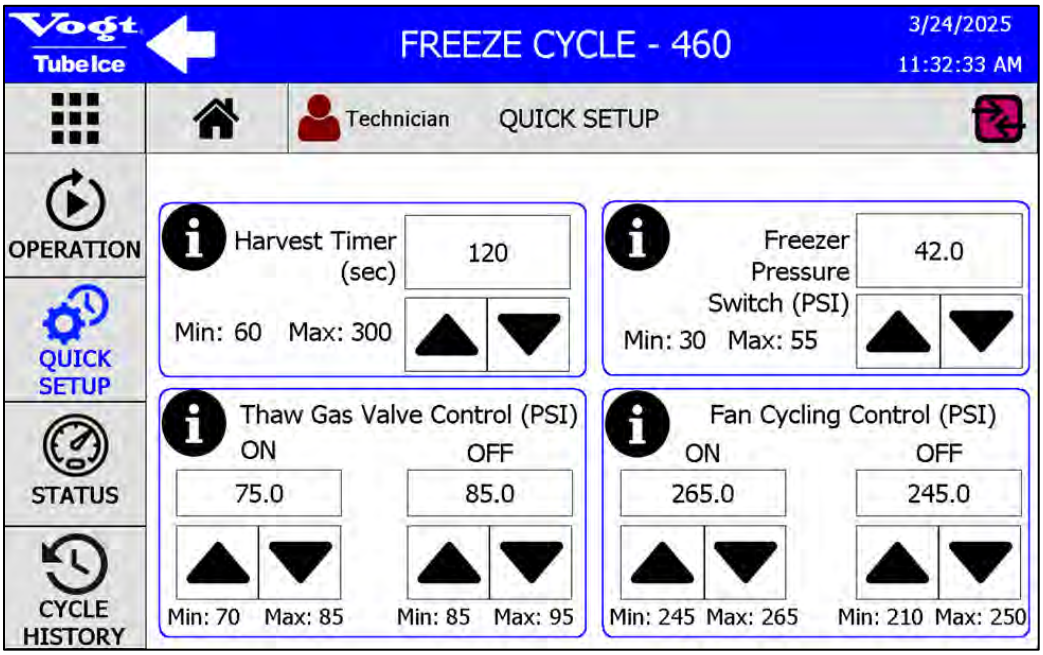

Figure 74: Harvest Timer

Pumpdown

The pumpdown function transfers all the liquid refrigerant from the freezer (evaporator) into the receiver. This function is only performed when the freezer is clear of ice and before or during the following operations:

- Checking the total refrigerant charge
- Performing service or repair work on the machine
- Winterizing the machine
- Preparing the machine for disconnecting and moving
- Before cleaning

To perform a pumpdown, follow these steps:

1. Close the liquid stop valve (king valve) at the receiver during a freeze cycle.
2. Allow the machine to enter into a thawing cycle and empty the freezer of all ice.
3. While in the harvest, open the water tank drain valve partially to allow a continuous flow of warm makeup water into the tank while still maintaining the appropriate water level. An auxiliary supply of warm water (not to exceed 100°F [38°C]) may be used if available.
4. On the touch screen HMI, access the **Troubleshooting** menu from the **Menu** screen.

5. When the machine begins to enter the next freeze cycle, press the Pumpdown Mode touch screen button in the Troubleshooting menu.

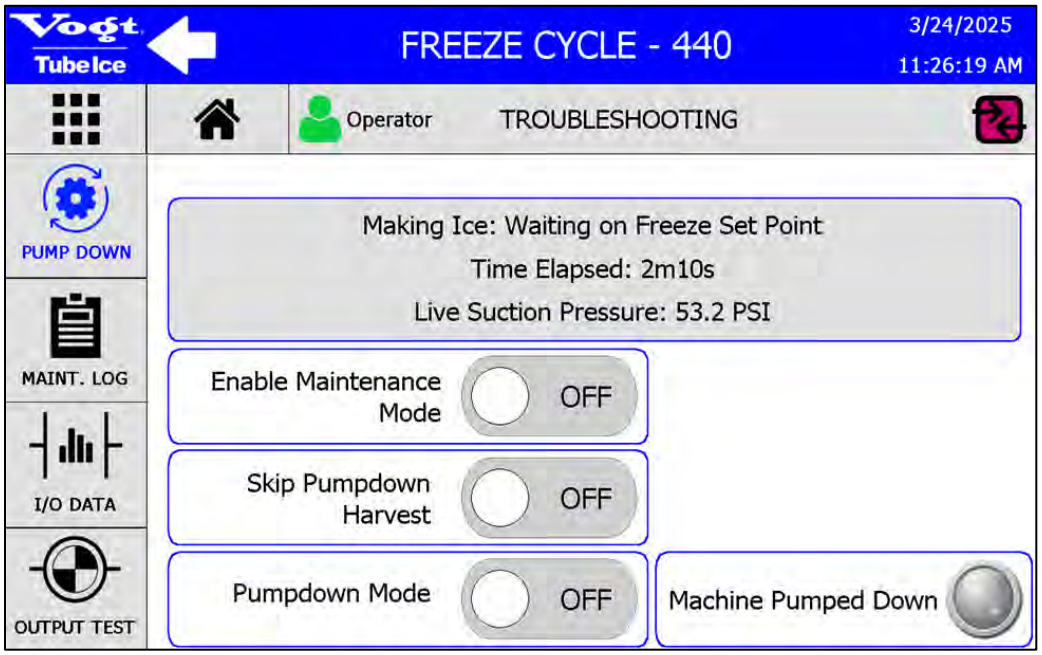

Figure 75: Pumpdown Mode Touch Screen Button

6. Allow the machine to operate until the Freezer Pressure Setting reaches the normal setpoint and enters a 60 second Pumpdown Harvest.
7. After completion of the Pumpdown Harvest, the machine will operate until it reaches 3 psi. The machine will shut off.
8. Close the thawing gas stop valve, the receiver liquid return stop valve, the compressor suction valve, and the compressor discharge valve.

Removing Refrigerant

To transfer the refrigerant charge from the machine into a separate cylinder or tank, proceed as instructed above under *Pumpdown*. This will isolate most of the refrigerant in the receiver, and the refrigerant recovery unit can be connected to the access port (44) of the liquid stop valve (king valve #58) at the bottom of the receiver. Open the valve by turning the valve stem out, and operate the refrigerant recovery unit until the system is considered empty.

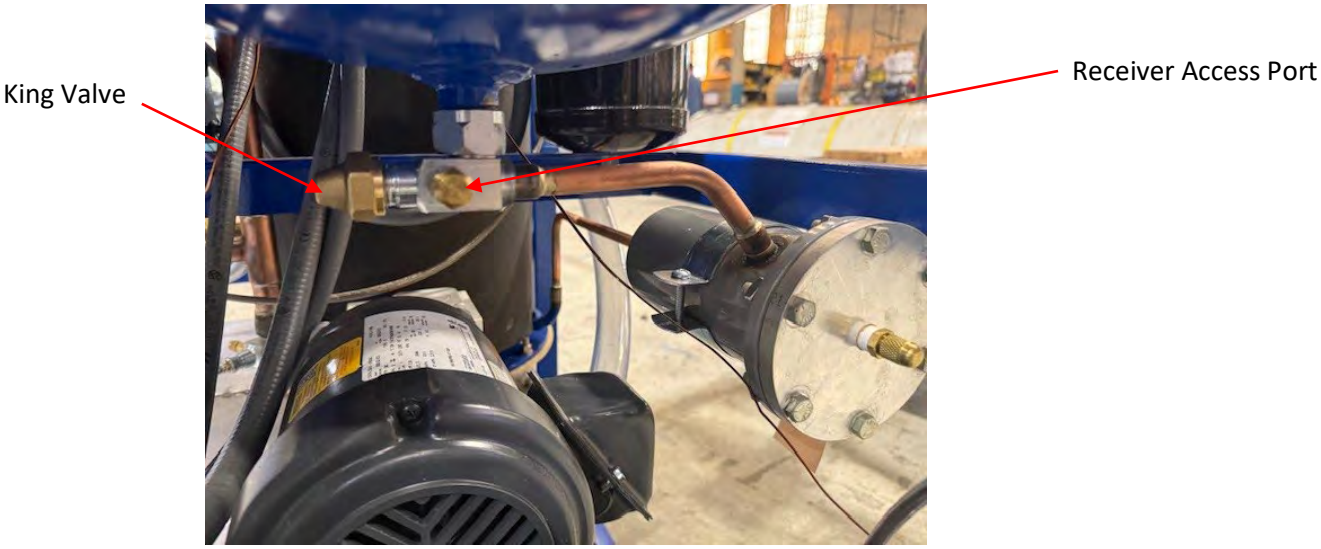

Figure 76: Receiver King Valve

Warning: Approved refrigerant recovery equipment, hoses, gauges, and refrigerant containers must be used in compliance with all local and federal regulations. Only qualified personnel should perform refrigerant servicing and recovery processes. Follow these instructions carefully. Severe personal injury can result from improper discharge of refrigerant. It is not recommended to transfer refrigerant from a refrigeration system directly into a cylinder unless this cylinder is an approved, clean cylinder (free of any contaminants or foreign materials). The cylinder must be weighed continuously to assure contents do not exceed the net weight specified by the cylinder manufacturer or any applicable code requirements.

Note: Observe all local codes when handling and discharging refrigerant.

Refrigerant Leaks

It is recommended to complete a leak test after the unit has been in operation for approximately one week. Any noticeable change in operating conditions, other than shown on the Certificate of Test, may indicate a loss of refrigerant due to a leak. Always completely evacuate and recover the refrigerant from the vessel or tubing before repairs are attempted.

Non-Condensable Gases

Air and other non-condensable gases in a refrigeration system are not desirable and can cause unsatisfactory machine performance. Non-condensable gas effects are:

- Higher condensing pressure than what should match the condensed liquid temperature according to a pressure-temperature chart
- Greater electrical power consumption
- Reduced refrigeration capacity
- Longer than normal compressor running time
- Slow ice release
- Long thaw cycle

Air collects mostly in high-pressure condensers, receivers, and other high-pressure components. It is most commonly found in the coolest, lowest-velocity area of these components.

Evaporative condensers usually have purge points at the top of the outlet header of each circuit. Receivers usually have a purge point at the top, away from the inlet, where it is coolest, and the gas velocity is the lowest.

Excessive condensing pressure in water-cooled condensers may also be due to:

- Accumulation of scale in the cooling coil
- Insufficient cooling water
- Excessive water temperature

Solenoid Valves

All solenoid valves are pilot operated with floating-type diaphragms. For satisfactory operation, make sure the manual opening stem is in the automatic position (stem is fully backseated or out). Correct direction of stem rotation is shown on the stem seal nut with an arrow, as shown in **Figure 77**.

Sporlan 1 1/8" Solenoid Valve
Vogt Part #: 12A4200A09041
Sporlan #: ME35S190

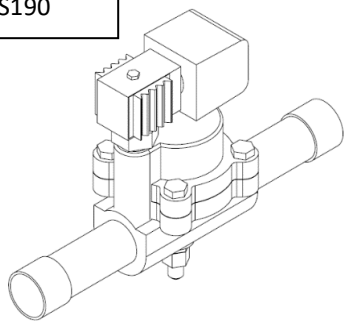

Replacement Coil – MKC-1
Vogt Part #: 12A2105C26
Rebuild Kit – KS-E35
Vogt Part #: 12A4199V56

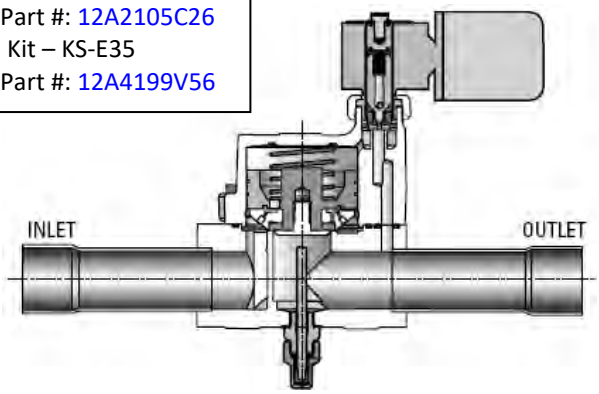

Figure 14: "D" & "X" Solenoid Valve (Sporlan)

Sporlan 5/8" Solenoid Valve
Vogt Part #: 12A4200A0505
Sporlan #: ME19S290

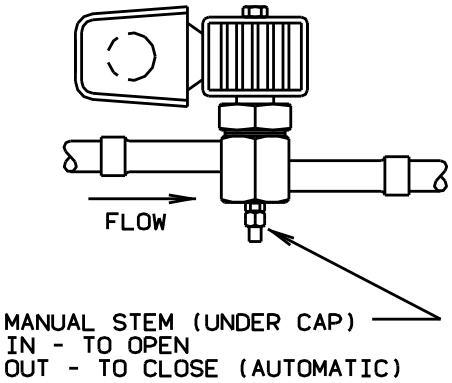

Replacement Coil – MKC-2
Vogt Part #: 12A2105C16

Rebuild Kit – KS-B19/E19
Vogt Part #: 12A4199V43

FIGURE 78: "A" Solenoid Valve (Sporlan)

Capacity Control Valves

A schematic illustration of the internal valve operation is shown in **FIGURE 79**.

In the normal (full capacity) operating position with the solenoid valve de-energized, the needle valve is seated on the lower port, and the unloading plunger chamber is exposed to suction pressure through the suction port. Since the face of the plunger is open to the suction chamber, the gas pressures across the plunger are equalized, and the plunger is held in the open position by the spring.

When the solenoid valve is energized, the needle valve is seated on the upper port, and the unloading plunger chamber is exposed to discharge pressure through the discharge pressure port. The differential between discharge and suction pressure forces the plunger down, sealing the suction port in the valve plate, thus preventing the entrance of suction vapor into the unloaded cylinders.

The seal on the unloading plunger minimizes any leakage in pressure so that a pump down cycle may be used with the valve either energized or de-energized without excessive compressor cycling.

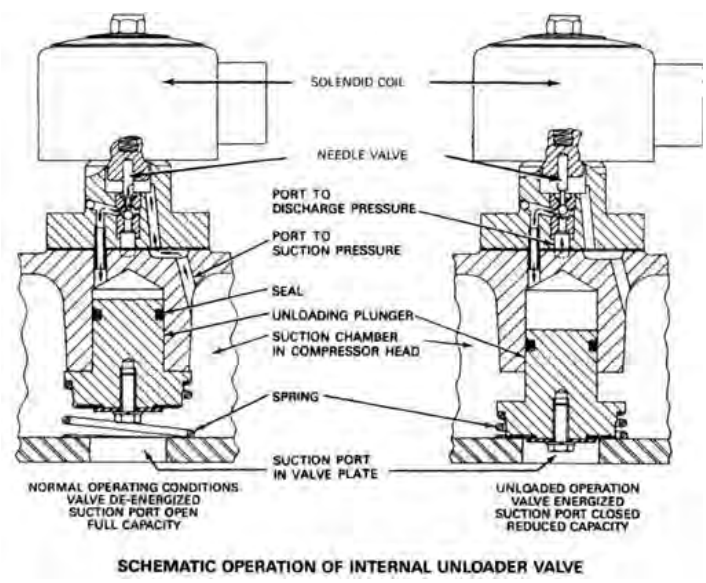

Figure 79: Compressor Unloader Solenoid Valve

Loaded Operation (during freeze). This capacity control valve is controlled by an electric solenoid. When the solenoid is de-energized, the valve loads the cylinder bank (2 cylinders) as shown in the above figure.

Unloaded Operation (during thaw only). During the thaw cycle, the solenoid coil is energized. The needle valve is seated on the upper port, and the unloading plunger chamber is exposed to discharge pressure through the discharge pressure port. The differential between discharge and suction pressure forces the plunger down, sealing the suction port in the valve plate, thus preventing the entrance of suction vapor into the unloaded cylinders.

Circulating Water Pump Motor

The motor bearings are pre-lubricated and sealed. They require no further lubrication. The pump should operate with the water level above the impeller housing. The pump also has a mechanical seal that requires no lubrication and is self-adjusting. However, the pump should not be operated unless it is circulating water. The pump manufacturer recommends that a mechanical seal be kept as a spare. When ordering a seal, specify pump size, type, serial number, and manufacturer's name as indicated on the nameplate.

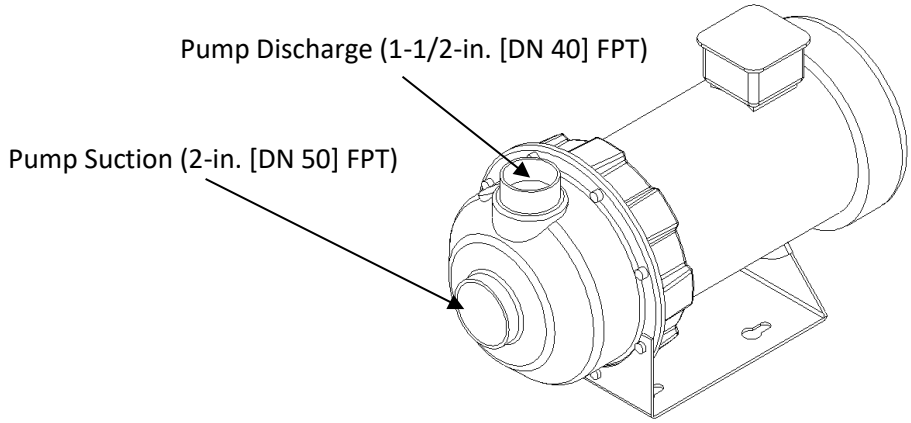

Figure 80: Circulating Water Pump

Table 9 shows replacement part numbers for the water pump and seal kit:

Table 12: Circulating Water Pump Parts

Part Description	Vogt Part Number
Water Pump Seal Kit	12A4080S12
Water Pump, 60 Hz	12A4020G01
Water Pump, 50 Hz	12A4020G08

Cutter Gear Reducer

The oil level for the gear reducer should be level with the plugged opening in the side of the gear housing. If not, this is evidence of a leak. Use food-grade oil and change oil once a year. The motor bearings are pre-lubricated and require no further lubrication.

Gear Reducer (10:1)

Part #: 12A4030R12

Replacement Food-Grade Oil:

- Part #: 19T3020C01
- Texaco Cygnus 220
- Oil Capacity: 8 oz (227 g)

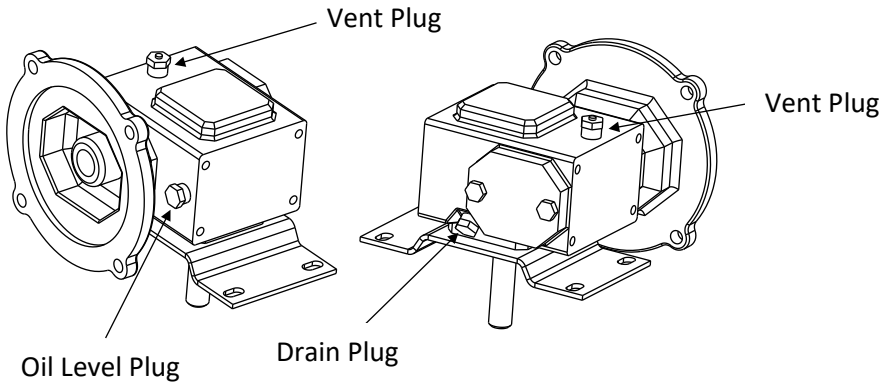

Figure 81: Gear Reducer

Table 13 shows replacement part numbers for the gear reducer and lubricating oil:

Table 13: Gear Reducer Service Parts

Part Description	Vogt Part Number
Gear Reducer, 10:1, Cylinder Ice	12A4030R12
Food-Grade Lubricating Oil (8 Oz [227 g])	19T3020C01

Cutter Motor Replacement

The cutter motor bearings are pre-lubricated and sealed, requiring no further lubrication or maintenance. If the motor requires replacement, follow the steps below:

1. Turn the power off and lock out the disconnect.
2. Check terminals with voltmeter to confirm the power is off.
3. Remove motor terminal cover and disconnect wires. Mark wires for ease of replacement.
4. Remove four cap screws around the motor flange and separate the motor from the reducer. Watch for shaft key that must be reinstalled later. Replacement motor does not come with a new key.
5. Check the motor electrically for shorts to confirm that it is defective.
6. Apply anti-seize lubricant to the shaft of the replacement motor.
7. Position the shaft key in the motor keyway, align it with the reducer keyway, and install the motor. Make sure that the key stays in position as the shaft is inserted.
8. Install the four cap screws to hold the motor in place on the reducer.
9. Connect the wires and install the terminal cover.
10. Check motor rotation to verify that the cutter turns counterclockwise. Reverse two wires at the motor if necessary, to change rotation direction.

Cutter Gear Reducer Removal and Replacement

To remove the gear reducer, follow the steps below (refer to **Error! Reference source not found.**):

1. Turn the power off and lock out the disconnect.
2. Remove the motor from the gear reducer.
3. Slightly loosen the 4 bolts and nuts holding the gear reducer in place.
4. Remove the four bolts holding the mounting plate to the water tank gear enclosure and remove the gear reducer and mounting plate from the tank.
5. Measure the distance between the top of the drive gear and the mounting plate for future reference.
6. Remove the three cap screws from the gear and hub and install 2-1/4-in. [57 mm] -20 x 2-in. [51 mm] long cap screws in the threaded holes of the drive gear. These two screws can be used as jacking bolts to remove the gear from the taper split hub.
7. The split hub is removed by placing a screwdriver in the split and sliding the hub off the shaft.
8. The new gear reducer is installed by reversing the removal procedure.
9. Check that the gear and hub are properly positioned on the shaft. The driver and cutter ring gears must mesh completely along the gear thickness as installed in the machine.
10. Adjust the final gear mesh so that only a slight amount of play exists between the drive gear and the ring gear.
11. Check that all bolts are tightened securely and that there is no excessive gear noise when the cutter motor is running.

Water Tank Removal

To remove the water tank from the machine, follow the steps below:

1. Turn off and lock out power to the machine.
2. Turn off water supply and disconnect lines from the tank.
3. Drain the tank and disconnect pump suction tube and drain line tubing and water lines.
4. Disconnect the ice discharge chute.
5. Loosen bolts holding the tank to the cutter assembly until the tank rests on the bars.
6. Loosen bolts holding the tank supports.
7. The tank can then be removed to the side of the machine.
8. Make sure the rubber gasket is in place and aligned properly when the tank is installed and bolted to the freezer.

Cutter and Bearing Removal and Reinstallation

Follow the steps below. Refer to Figure 76 .

1. Turn off and lock out power to the machine.
2. Remove the cutter motor from the reducer.
3. Remove the water tank assembly and then the cutter assembly.
4. With a 1/4” or slightly smaller punch, reach in through the ice discharge opening, drive the spiral pin out of the disc hub and cutter shaft, and push or drive the disc off the shaft.
5. Lift the cutter assembly out of the bearing surface of the cutter. The surface should be smooth and free from nicks or burrs.
6. Inspect the bearing for wear. There should be no side movement between the shaft and bearing and the bearing thrust flange should be no thinner than 3/16” (it is 1/4” thickness new).
7. Before removing the bearing, reference mark the location of the bearing support on the side of the tank.
8. Loosen and remove the three cap screws from the bearing support ends and lift the support out of the water tank.
9. Drive the 3/16” x 1/2” pin located in the side of the support hub in and through the bearing wall.
10. Now the bearing can be pressed or driven out of the support hub.
11. Try the new bearing on the cutter shaft to make sure it turns easily.
12. Press or drive the new bearing into the hub. Be careful not damage the bearing surfaces (the old bearing may be used as a driver).
13. Drill a 3/16” hole through the bearing wall, using the original hub hole as a pilot. Insert and drive the 3/16” pin flush with the outside of the hub, making sure the pin doesn’t extend beyond the inner surface of the bearing.
14. Slide the new bearing and support onto the cutter shaft to make sure it spins freely. If it is tight, ream the bearing inner surface slightly until it turns free.
15. Install the bearing support in the tank, using the reference marks as a guide.
16. Slide the cutter and shaft into the bearing and check the cutter alignment. By laying a straight edge across the tank top flange, there should be 0” to 1/16” clearance between the rim of the cutter and the top of the tank flange. Loosen the bearing support cap screws and drive the support arms up or down for the proper alignment.

17. Tighten the support screws securely and finish assembly of the cutter and cutter disc.
18. Install the tank and other parts, reversing the procedure of removal.

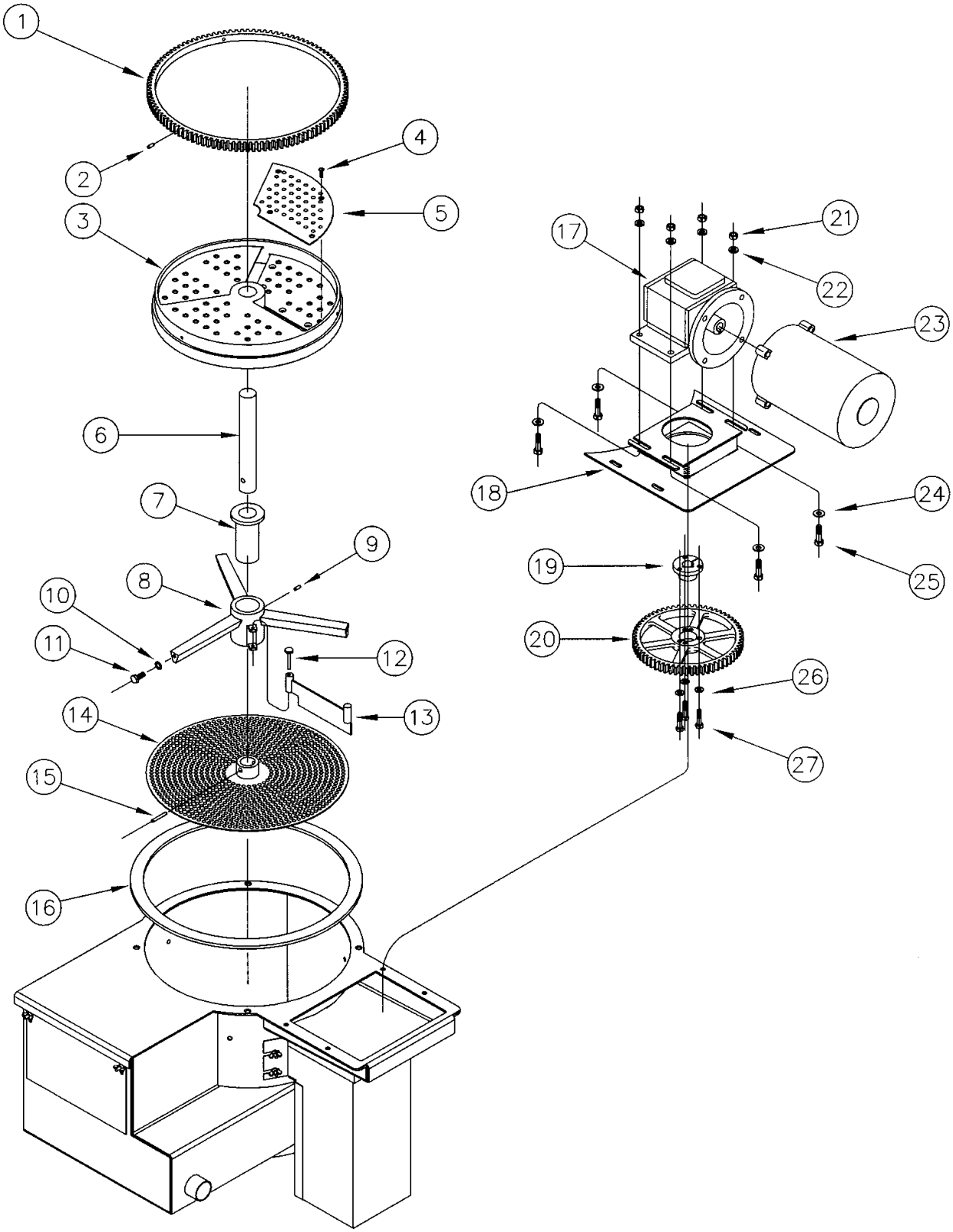

Figure 82: Cutter Assembly

To re-install the breaker cutter and bearing, follow steps 1-8 below:

1. Push the new bearing into the cutter support hub.
2. Using the pin hole in the side of the cutter support hub as a guide, drill a 3/16-in. (5-mm) hole through the wall of the bearing.
3. Drive in the 3/16-in. (5-mm) pin through the drilled hole until it is flush with the outside wall of the cutter support hub. Check that the pin does not extend into the surface inner diameter (ID) of the bearing.
4. Slide the new bearing and cutter support onto the cutter shaft and check that it spins freely. If the fit is tight, carefully ream the inner surface (ID) of the bearing until it turns freely.
5. Install the bearing support in the water tank, using the reference marks you made as a guide.
6. Slide the cutter and shaft into the bearing and check the cutter alignment. Lay a straight edge across the top flange of the tank and verify that the clearance between the rim of the cutter and the top of the tank flange is between 0 and 1/16 in. (2 mm). Loosen the bearing support cap screws and move the support arms up or down to achieve proper alignment.
7. Tighten the support screws securely and reinstall the cutter and cutter disc.
8. Install the tank and other parts, reversing the procedure of removal.

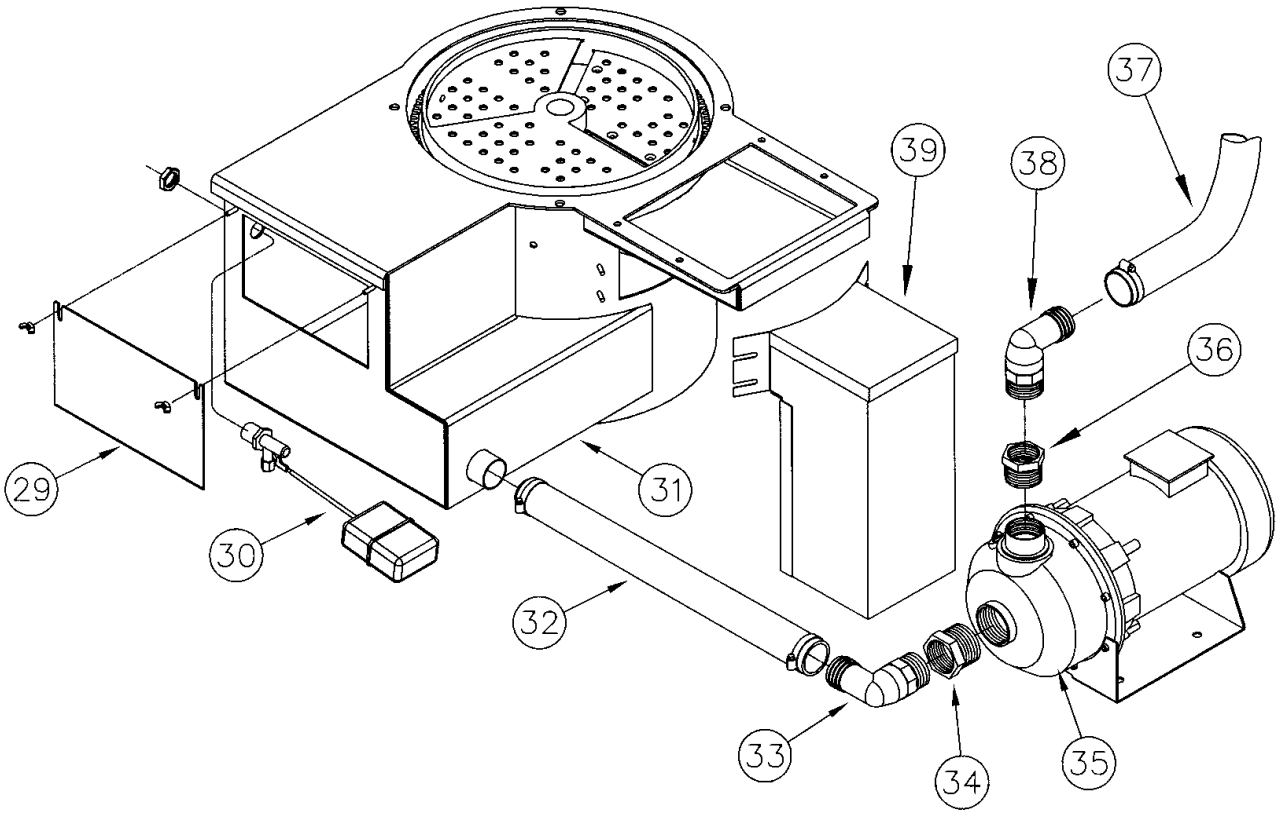

Figure 83: Water Tand and Pump Assembly

Item No.	Vogt Part Number	Description
1	N/A	Cutter Ring Gear – part of cutter casting
2	12A3040S02	Spring Pin
3	19T2160C0101	Cast Cutter
4	12A2226F1108	1/4” Flat Head Screw
5	19T2010A01	Cutter Adapter Plate
6	19T4090S01	Cutter Shaft
7	12B2020R04	UHMW Cutter Bearing
8	19T2025B0103	Bearing Support
9	12A3040S02	Spring Pin
10	12A2250A1070	1/4” Cut Washer
11	12A2215F1206	1/4” Cap Screw
12	12A4071S03	Rivet For Ice Deflector
13	19T2170D01	Ice Deflector
14	19T2163D0101	Cutter Disc Assembly
15	12A3040S01	Spirol Pin
16	12A2600G12	Water Tank Gasket
17	12A4030R12	Gear Reducer
18	12B2165M0101	Gear Reducer Mounting Bracket
19	12A2160H0101	Gear Hub
20	19T2615D01	Drive Gear
21	12A2240A1108	5/16” Hex Nut
22	12A2250B108	5/16” Lockwasher
23	12A2900M0508	Motor, 1/2 Hp, 208/230/460-3-50/60 Hz
24	12A2250A108	5/16” Cut Washer
25	12A2215G1108	5/16” X 3/4” Hex Head Cap Screw
26	12A2250B107	1/4” Lockwasher
27	12A2215F1112	1/4” Hex Head Cap Screw
29	19T1501S0505	Float Box Cover Assembly
30	12A4200H0401	Roberts NSF approved Float Valve, ½"
31	19T4500S112	Water Tank Assembly
32	12A4181T07	1 1/4” I.D. Tygon Tubing
33	12A2450E17	Elbow, 1 1/4” MPT X Insert
34	12A2450B12	2” X 1 1/4” Bushing
35	12A4020G01	Water Pump, Gould NPE-3ST
36	12A2450B02	Bushing 1 1/2” X 1 1/4”
37	12A4181T06	1 1/4” I.D. Tygon Tubing
38	12A2450E17	Elbow, 1 1/4” MPT X Insert
39	19T2090C07	Ice Chute Assembly

Table 14
Cutter/Tank Assembly Nomenclature

Crushed Ice Production

Your HFO3 Tube-Ice® machine is capable of producing crushed ice with no loss of capacity. However, there are certain changes to be made in order to convert to crushed ice production.

Modifications Required:

1. Reverse cutter direction by switching 2 of the 3 leads at the cutter motor (connections 52, 53 and 54).
2. Set the freezer pressure setting at 38 psi to make ice 3/16" thick (average). It is adjusted on the **Quick Setup** screen when viewing the **Home** screen on the HMI. The freezer harvest pressure may need to be adjusted by + 1-3 psi to get the required thickness of ice.

It is recommended that you have good quality water when attempting to produce crushed ice. If the ice is opaque and cloudy, the cutter mechanism may become clogged, restrict ice discharge and bind the cutter. In addition, you should not attempt to produce crushed ice when the make-up water temperature is below 50°F (10°C). Colder water can cause a build-up of ice fines in the tank and eventually result in "short-cycling" which can damage the compressor.

Complete detailed instruction for converting to crushed ice production can be obtained through your distributor.

Appendix A Optional Accessories

The following sections describe the optional accessories available.

Power Monitor, Wagner Model DTP-3

All Vogt Tube-Ice® machine models are available from the factory with a three-phase line voltage power monitor, incorporating an LCD display, called the DTP-3, as shown in Figure 78. The units are also available for aftermarket or retrofit installation. These units monitor line voltage inputs from 190 to 610 volts and provide protection against line voltage variances, which can damage or destroy the compressor motor.

Features include:

- Non-volatile system memory to retain settings when power is lost.

If the machine is ordered with this option, the power monitor can be factory set to customer specifications. The Vogt part number for a power monitor retrofit kit is 12A7700K01.

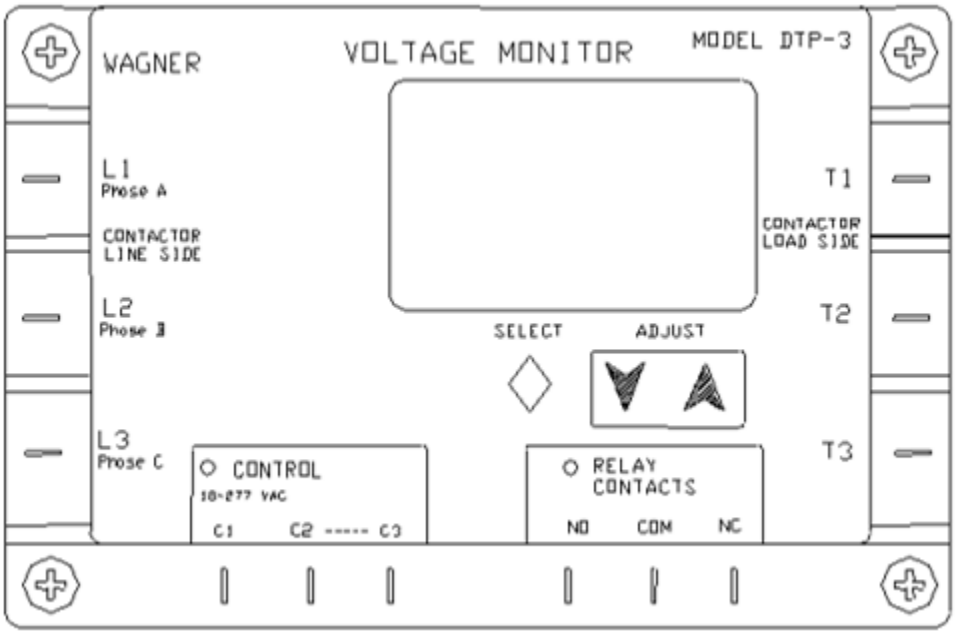

Figure 84: Power Monitor (Voltage Monitor)

The Display

The display normally shows phase A to B, phase B to C, and C to A line voltages. If the unit is on a timer, that timer will be displayed. The timer display may be switched off by pressing **SELECT**. The LCD will then display the normal A-B, B-C, C-A line voltage pairs.

Pressing **SELECT** once shows the contactor load side voltages (if the load side option is connected). The display automatically returns to the display of line side voltage after a few seconds.

Press **SELECT** to step through the parameters, as shown in **Table 15**. The selected parameter will flash. Use the up and down arrow keys to select the desired operating value.

Table 15: Power Monitor Parameters

Parameter (Description, units)	Min.	Max.	Default	Recommended Settings
Line Side Voltage (Nominal Voltage, volts)	90	650	208	Supply voltage
Over Voltage (tolerance, %)	6	18	12	10
Under Voltage (tolerance, %)	6	18	12	10
Phase Unbalance (%)	2	25	6	5
Lockout Time (Delay on Break, seconds)	0.1	25	0.5	120
Delay Time (Delay on Make, seconds)	0	30	0	0
Response Time (Delay on Fault, seconds)	0.1	20	2	2
Control Mode (none)	Off / Auto / On		Auto	On
Contactor Test (Volt Diff)	OFF	5	OFF	OFF

Adjustment of Parameters in Order of Display

The following describes how to adjust the power monitor parameters in order of display if adjustment is needed.

- **Line Voltage**—This gives an active display of the line voltage to the machine. By default, this is the normal display.
- **Load Side Voltage**—If connected, this provides an active display of the load side voltage in the machine.
- **Voltage Setpoint** (VAC Flashes)—Press the UP and DOWN arrows. This may be set to the normal operating voltage of the device being protected. Adjustment increments are 1 volt.
- **Under/Over Voltage Tolerance** (UNDERVOLTAGE/OVERVOLTAGE Flashes)—Press the UP and DOWN arrows. The tolerance is displayed in percentages.
- **Imbalance Voltage Tolerance** (% IMBALANCE Flashes)—This value may be adjusted by pressing the UP and DOWN arrows.
- **Lockout Time** (SECONDS Flashes)—This value may be adjusted by pressing the UP and DOWN arrows. This is the delay-on-break timer value.
- **Delay Time** (RESP. SECONDS Flashes)—This display shows time in seconds and tenths of seconds. This value may be adjusted by pressing the UP and DOWN arrows. This is the time that a fault is allowed before shutdown occurs.
- **Control Mode** (ON OFF AUTO Flashes)—This value may be adjusted to OFF (load will not turn on), ON (load will turn on whenever no faults exist and timers are finished), and AUTO (load will turn on when a control input is active).
- **Contactor Fault Monitor Mode** (CONTACTOR FAULT Flashes)—This option allows for monitoring of the contactor and provides lock-out if the line voltage and load side voltage vary by more than five (5) volts. Pressing the UP or DOWN arrow will toggle between OFF (default) and ON. The load side of the contactor must be connected to the load terminals of the power monitor to use this option.
- **Display of Fault Memories** (MEM Flashes)—Pressing UP or DOWN arrow displays the last fault conditions that shut down the machine. The first 25 faults are recorded. The top number displayed represents the fault memory. The middle number represents the total number of faults that have occurred since the fault memory was cleared. To clear the memory, press and hold both the UP and DOWN arrows until the display is cleared.

Notes

- If the SELECT button is pressed and no parameters are changed by pressing the UP or DOWN arrow keys, the DTP-3 will automatically return to a display showing the line voltage.
- New settings are saved in permanent memory when the display returns to showing the line voltage. New settings may be verified by pressing the SELECT button to scroll through the parameters.
- To prevent tripping on a one (1) volt change, the DTP-3 automatically calculates cut-in voltages for the return from undervoltage conditions. The cut-out out voltage is always based on user voltage and tolerance settings, while the cut-in voltage is 3% closer to the nominal voltage setting. This quality is referred to as hysteresis. This is to help reduce oscillation that may occur on a weak power distribution system. When the load is switched off due to undervoltage, the line voltage will increase. Without hysteresis, the monitor would switch the load back on, the line voltage would again drop, and cause continuous on-off-on cycling.

Appendix B Tables

Table 16: HFO3 Specifications

HFO3 SPECIFICATIONS		208-230 Volt-3 Phase- 60Hz		460 Volt-3 Phase 60Hz	
Model Number		HFO3-1	HFO3-1 1/4	HFO3-1	HFO3-1 1/4
Tube Size	inches (cm)	1 (2.54)	1 1/4 (3.17)	1 (2.54)	1 1/4 (3.17)
Nominal Capacity (1)	lbs/day (Kg/day)	6,024 (2,732)	5,725 (2,597)	6,024 (2,732)	5,725 (2,597)
Overall Dimensions (LxWxH)	inches (meters)	50 x 29 x 72 (1.3x0.74x1.8)	50 x 29 x 72 (1.3x0.74x1.8)	50 x 29 x 72 (1.3x0.74x1.8)	50 x 29 x 72 (1.3x0.74x1.8)
Shipping Weight	lbs (Kg)	2000 (907)	2000 (907)	2030 (921)	2030 (921)
Operating Weight	lbs (Kg)	2030 (921)	2030 (921)	2060 (934)	2060 (934)
Refrigerant Charge (R452a)	lbs (Kg)	167 (76)	167 (76)	167 (76)	167 (76)
Total FLA Water Cooled		48.4	48.4	23.7	23.7
Total FLA Air Cooled		62.4	62.4	30.7	30.7
Maximum Fuse	WC / AC	100/115	100/115	50/60	50/60
Minimum Ampacity	WC / AC	57/73	57/73	29/36	29/36
Water Requirements					
-makeup(2)	gpm (L/m)	0.6 (2.3)	0.6 (2.3)	0.6 (2.3)	0.6 (2.3)
-condenser(3)	gpm (L/m)	30 (114)	30 (114)	30 (114)	30 (114)
Connection Sizes					
-makeup water	FPT	3/8”	3/8”	3/8”	3/8”
-tank drain	FPT	3/4”	3/4”	3/4”	3/4”
-condenser water inlet	FPT	1 1/4”	1 1/4”	1 1/4”	1 1/4”
-condenser water outlet	MPT	1 1/4”	1 1/4”	1 1/4”	1 1/4”
-AC condenser inlet	ODC	1 3/8”	1 3/8”	1 3/8”	1 3/8”
-AC condenser outlet	ODC	1 1/8”	1 1/8”	1 1/8”	1 1/8”
Compressor -HP/KW/FLA		6.5 / 9.4 / 41.0	6.5 / 9.4 / 41.0	6.5 / 9.2 / 20	6.5 / 9.2 / 20
Water Pump -HP/KW/FLA		1.5 / 1.9 / 4.8	1.5 / 1.9 / 4.8	1.5 / 1.9 / 4.8	1.5 / 1.9 / 4.8
Cutter Motor -HP/KW/FLA		0.5 / .37 / 2.2	0.5 / .37 / 2.2	0.5 / .37 / 2.2	0.5 / .37 / 2.2
Total Heat Rejection (THR)	Btu/hr (kW)	122,000 (35.7)	122,000 (35.7)	122,000 (35.7)	122,000 (35.7)
Bohn Air-Cooled Condenser(4)		BNHS02A011			
- # of Fans / HP		2 / 1.5	2 / 1.5	2 / 1.5	2 / 1.5
-total KW/FLA (230V)		2.2 / 14	2.2 / 14	2.2 / 14	2.2 / 14
-inlet connection	ODC	1 3/8”	1 3/8”	1 3/8”	1 3/8”
-outlet connection	ODC	1 1/8”	1 1/8”	1 1/8”	1 1/8”
-shipping weight	lbs (Kg)	760 (345)	760 (345)	765 (347)	765 (347)
-operating weight	lbs (Kg)	580 (263)	580 (263)	585 (265)	585 (265)

(1) Nominal capacity is based on 70°F make-up water, 100°F condensing temp, and 90°F ambient.
(2) Makeup water is maximum value and includes 10 gallons per cycle blowdown.
(3) Condenser flow rate is for 85°F entering water temp and 100°F condensing.
(4) Recommended air-cooled condenser is based on 15°F TD.
Vogt reserves the right to change designs and specifications without notice.

Table 17: HFO3 Capacity Chart, 50/60 Hz

Makeup Water Temp. Deg. F.	Rated Capacity (lbs/day)							
	60Hz				50Hz			
	Cylinder		Crushed		Cylinder		Crushed	
	1"	1 1/4"	1"	1 1/4"	1"	1 1/4"	1"	1 1/4"
40	6955	6592	7233	6856	6816	6460	7088	6719
41	6925	6564	7202	6826	6786	6432	7058	6690
42	6895	6535	7171	6796	6757	6404	7027	6660
43	6865	6506	7139	6767	6727	6376	6997	6631
44	6835	6478	7108	6737	6698	6348	6966	6602
45	6805	6449	7077	6707	6668	6320	6935	6573
46	6775	6421	7045	6677	6639	6292	6905	6544
47	6744	6392	7014	6648	6610	6264	6874	6515
48	6714	6364	6983	6618	6580	6236	6843	6486
49	6684	6335	6952	6588	6551	6208	6813	6457
50	6686	6347	6953	6601	6552	6220	6814	6469
51	6652	6312	6918	6564	6519	6186	6780	6433
52	6619	6277	6884	6528	6487	6151	6746	6398
53	6585	6243	6848	6493	6453	6118	6711	6363
54	6552	6208	6814	6456	6421	6084	6678	6327
55	6518	6173	6779	6420	6388	6050	6643	6292
56	6484	6139	6743	6385	6354	6016	6608	6257
57	6451	6104	6709	6348	6322	5982	6575	6221
58	6417	6070	6674	6313	6289	5949	6540	6187
59	6384	6035	6639	6276	6256	5914	6507	6151
60	6350	6000	6604	6240	6223	5880	6472	6115
61	6318	5973	6571	6212	6192	5854	6439	6088
62	6285	5945	6536	6183	6159	5826	6406	6059
63	6252	5918	6502	6155	6127	5800	6372	6032
64	6220	5890	6469	6126	6096	5772	6339	6003
65	6187	5863	6434	6098	6063	5746	6306	5976
66	6155	5835	6401	6068	6032	5718	6273	5947
67	6122	5808	6367	6040	6000	5692	6240	5920
68	6089	5780	6333	6011	5967	5664	6206	5891
69	6057	5753	6299	5983	5936	5638	6173	5863
70	6024	5725	6265	5954	5904	5611	6140	5835
71	5997	5697	6237	5925	5877	5583	6112	5806
72	5969	5669	6208	5896	5850	5556	6084	5778
73	5942	5641	6180	5867	5823	5528	6056	5749
74	5914	5613	6151	5838	5796	5501	6028	5721
75	5887	5585	6122	5808	5769	5473	6000	5692
76	5860	5557	6094	5779	5743	5446	5973	5664
77	5832	5528	6065	5749	5715	5417	5944	5634
78	5805	5500	6037	5720	5689	5390	5916	5606
79	5777	5472	6008	5691	5661	5363	5888	5577
80	5750	5444	5980	5662	5635	5335	5860	5549
81	5723	5418	5952	5635	5609	5310	5833	5522
82	5696	5393	5924	5609	5582	5285	5805	5497
83	5669	5367	5896	5582	5556	5260	5778	5470
84	5643	5341	5869	5555	5530	5234	5751	5444
85	5616	5316	5841	5529	5504	5210	5724	5418
86	5589	5290	5813	5502	5477	5184	5696	5392
87	5562	5265	5784	5476	5451	5160	5669	5366
88	5535	5239	5756	5449	5424	5134	5641	5340
89	5509	5213	5729	5422	5399	5109	5615	5313
90	5482	5188	5701	5396	5372	5084	5587	5288

- Capacity rating based on 70ºF ambient conditions, 100°F SDT temperature.
- Capacity rating is average for the model. Individual machines may vary up to 5% above or below.
- Capacity rating is for clear ice production with makeup water containing no more than 200 ppm total dissolved solids.

Table 18: Condenser Water Usage

Condensing Temp. °F	Entering Water Temp. °F	Leaving Water Temp. °F	Water Flow GPM	Pressure Drop	Average Total Heat of Rejection
100	50	92	4	1	122,000
100	55	92	5	1	122,000
100	60	92	7	1	122,000
100	65	92	8	1	122,000
100	70	93	10	1	122,000
100	75	93	13	2	122,000
100	80	94	18	2	122,000
100	85	94	29	6	122,000
105	90	95	46	11	122,000
110	95	100	50	11	122,000

Table 19: Makeup Water Usage

Make-up Water Temp. °F	Cylinder Ice Tube Size		Crushed Ice Tube Size	
	1”	1 ¼”	1”	1 1/4”
40	0.69	0.66	0.71	0.69
50	0.66	0.63	0.68	0.65
60	0.62	0.59	0.65	0.61
70	0.6	0.56	0.62	0.59
80	0.56	0.53	0.59	0.55
90	0.54	0.5	0.56	0.53

Includes 15% Blowdown

Table 20: Normal Operating Criteria, English Units

			Suction Pressure (psig)	Discharge Pressure (psig)	Harvest Times (sec)			Ice per cycle	Freeze Time (minutes)				
			End of Freeze	Average during Freeze	First	All Ice	Total	Avg	Water Temperature (°F)				
			R452A	R452A	Ice	Out	Harvest	(lbs)	90	80	70	60	50
60 HZ	CYL	1"	45	240	15	90	120	63	15.5	14.5	13.4	12.4	11.4
		1 1/4"	44	240	15	90	120	60	17.9	16.5	15.3	14.3	12.9
	CRU	1"	47	240	15	90	120	49	14.1	13.3	12.5	11.8	11.1
		1 1/4"	46	240	15	90	120	47	15.8	14.8	14	13.2	12.2
50 HZ	CYL	1"	45	240	15	90	120	62	15.5	14.5		12.4	11.4
		1 1/4"	44	240	15	90	120	59	17.9	16.5	15.3	14.3	12.9
	CRU	1"	47	240	15	90	120	48	14.1	13.3	12.5	11.8	11.1
		1 1/4"	46	240	15	90	120	46	15.8	14.8	14	13.2	12.2

Table 21: Normal Operating Criteria, Metric Units

			Suction Pressure (BARG)	Discharge Pressure (BARG)	Harvest Times (sec)			Ice per cycle	Freeze Time (minutes)				
			End of Freeze	Average during Freeze	First	All Ice	Total	Avg	Water Temperature (°C)				
			R452A	R452A	Ice	Out	Harvest	(kg)	32	27	21	16	10
60 HZ	CYL	25mm	3.1	16.5	15	90	120	29	15.5	14.5	13.4	12.4	11.4
		30mm	3.0	16.5	15	90	120	27	17.9	16.5	15.3	14.3	12.9
	CRU	25mm	3.2	16.5	15	90	120	22	14.1	13.3	12.5	11.8	11.1
		30mm	3.2	16.5	15	90	120	21	15.8	14.8	14	13.2	12.2
50 HZ	CYL	25mm	3.1	16.5	15	90	120	28	15.5	14.5	13.4	12.4	11.4
		30mm	3.0	16.5	15	90	120	27	17.9	16.5	15.3	14.3	12.9
	CRU	25mm	3.2	16.5	15	90	120	22	14.1	13.3	12.5	11.8	11.1
		30mm	3.2	16.5	15	90	120	21	15.8	14.8	14	13.2	12.2

Table 22: HF03 Spare Parts List

Qty	Part Number	Description
	See Table 5, Page	**Control Panel Parts**
	See Table 12, Page	**Cutter Parts**
1	12A2600G01	Gasket for freezer cover
1	12A2600G12	Gasket for water tank
1	12A2900M0508	Cutter Motor, 1/2 HP
1	12A4020G01	Water Pump, 1.5 HP
1	12A4200A0505	5/8" Liquid feed solenoid, Sporlan
1	12A4200C0503	Thermal Expansion Valve
2	12A4200H0401	Make-up water float valve
1	12A7509E12	Crankcase heater, (Copeland Discus Compressor)
78	12B2185N11	Water Distributors (1”)
48	12B2185N21	Water Distributors (1 1/4”)

Table 22: Temperature – Pressure Chart for R452A

Temperature (F)	Temperature (C)	R-22	R-404A	R-452A	R-513A
-48	-44.4	4.8	1.3	1.8	15.7
-44	-42.2	1.9	3.0	0.7	14.1
-40	-40.0	0.6	4.9	2.4	12.3
-36	-37.8	2.2	7.0	4.2	10.0
-32	-35.6	4.0	9.2	6.2	7.8
-28	-33.3	5.9	11.5	8.4	5.3
-24	-31.1	8.0	14.1	10.7	2.7
-20	-28.9	10.2	16.8	13.2	0.1
-16	-26.7	12.6	19.8	15.9	1.7
-12	-24.4	15.2	22.9	18.9	3.4
-8	-22.2	17.9	26.3	22.0	5.2
-4	-20.0	20.9	29.8	25.3	7.1
0	-17.8	24.0	33.7	28.9	9.2
2	-16.7	25.7	35.7	30.7	10.3
4	-15.6	27.4	37.7	32.7	11.4
6	-14.4	29.2	39.8	34.7	12.6
8	-13.3	31.0	42.0	36.7	13.8
10	-12.2	32.8	44.3	38.8	15.1
12	-11.1	34.8	46.6	41.0	16.4
14	-10.0	36.8	49.0	43.3	17.7
16	-8.9	38.8	51.5	45.6	19.1
18	-7.8	40.9	54.0	48.0	20.6
20	-6.7	43.1	56.6	50.5	22.0
22	-5.6	45.3	59.3	53.0	23.6
24	-4.4	47.6	62.0	55.6	25.1
26	-3.3	50.0	64.8	58.3	26.8
28	-2.2	52.4	67.8	61.1	28.5
30	-1.1	55.0	70.7	64.0	30.2
32	0.0	57.5	73.8	66.9	32.0
34	1.1	60.2	77.0	69.9	33.8
36	2.2	62.9	80.2	73.0	35.7
38	3.3	65.7	83.5	76.2	35.7
40	4.4	68.6	86.9	79.4	39.6
42	5.6	71.5	90.4	82.8	41.7
44	6.7	74.5	94.0	86.3	43.8
46	7.8	77.6	97.6	89.8	46.0
48	8.9	80.8	101.4	93.4	48.2
50	10.0	84.1	105.3	97.1	50.5
52	11.1	87.4	109.2	114.9	52.9
56	13.3	94.4	117.4	123.5	57.8
60	15.6	101.6	126.0	132.4	63.0
64	17.8	109.3	135.0	1418.0	68.5
68	20.0	117.3	144.4	151.7	74.2
72	22.2	125.7	154.3	162.0	80.2
76	24.4	134.5	164.6	172.7	86.6
80	26.7	143.6	175.4	183.9	93.2
84	28.9	153.2	186.7	195.6	100.2
88	31.1	163.2	198.4	207.8	107.5
92	33.3	173.7	210.7	220.6	115.2
96	35.6	184.6	223.4	233.8	123.2
100	37.8	195.9	236.8	247.6	131.6
104	40.0	207.7	250.6	261.9	140.3
108	42.2	220.0	265.1	276.8	149.4
112	44.4	232.8	280.1	292.3	159.0
116	46.7	246.1	295.8	308.4	168.9
120	48.9	260.0	312.1	325.1	179.3
124	51.1	274.3	329.0	342.4	190.1
128	53.3	289.2	346.6	360.3	201.3
132	55.6	304.7	364.9	379.0	213.0
136	57.8	320.7	383.9	398.3	225.1
140	60.0	337.4	403.7	418.3	237.8
144	62.2	354.6	424.3	4389.0	250.9
148	64.4	372.5	377.7	460.4	264.6

Table 23: Constants

Specific Heat of Water	1 BTU/(lbm °F) 1 calorie/gram °C
Specific Heat of Air	4.19 Kj/(kg °C) 0.24 BTU/(lbm °F)
Tube-Ice Density	32-35 lb/ft^3 0.51-0.56 gm/cm3
Ice Latent Heat	144 BTU/hr (42 watts/hr)
Water Sensible Heat	1 BTU/(lb °F) (4,182 Joules/kg °C)
Ice Melting Effect **1 Ton Refrigeration**	12,000 BTU/hr (3.5 kw/hr)
Atmospheric Pressure	14.7 psia (760 mmHg)
Weight of Water	62.4 lb/ft^3 1,000 kg/m^3 8.33 lb/gal
1 gpm Water **3.79 L/min**	12,013 lb/day 5,449 kg/day
Weight of Air	0.0749 lb/ft^3 (0.0100 lb/gal)
1 Horsepower	2,545.6 BTU/hr (46 watts)
1 Kilowatt	1.34 horsepower 3,411 BTU/hr
Gravitational Acceleration	9.81 m/sec^2

Appendix C Additional Documentation

The following lists other documents for your reference.

- OSHA Standard: The Control of Hazardous Energy (Lockout/Tagout) (29 CFR 1910.147)
- R452A Safety Data Sheet
- Water Conditioning Technical Service Bulletin 88-5
- Compressor Oil BSE-170 Safety Data Sheet
- Gear Reducer Oil Safety Data Sheet

Notes

Notes

Vogt Ice®, LLC
1000 W. Ormsby Ave.
Suite 19
Louisville, KY 40210 USA
Since 1880