INSTALLATION INSTRUCTIONS
RADIANT REST REPLACEMENT BRACKET

INSTALLATION INSTRUCTIONS FOR # 00-976654 BRACKET



⚠ WARNING Shut off the gas before servicing the unit and follow lockout / tagout procedures.

1. Remove burner, cooking grate and radiant.
2. Mark location of original radiant rest.

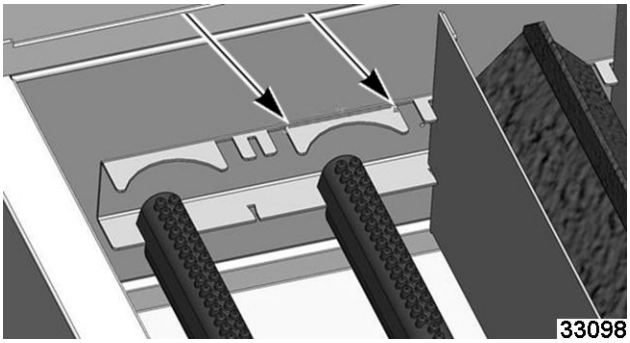

Fig. 1

3. Remove remaining portions of radiant rest.
4. Align new bracket (1, Fig. 2) with marks made in Step 2 and mark mounting holes (2, Fig. 2).

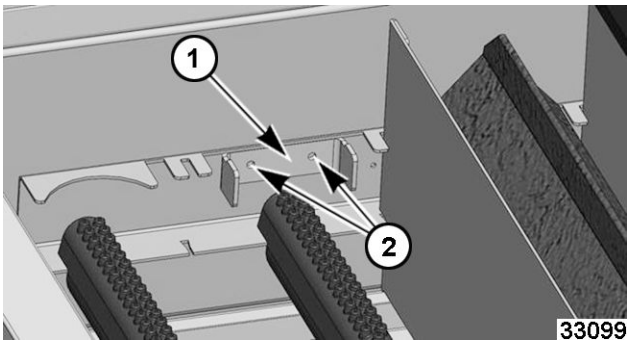

Fig. 2

5. Drill 11/64 holes on marks made.
6. Install bracket using #10 self tapping sheet metal screws (installer supplied).
7. Install burner, radiant and cooking grate.
8. Verify proper operation.