CATALOG OF REPLACEMENT PARTS



C24DA/GA-SERIES STEAMERS / DIRECT STEAM

C24GA6
C24GA10
C24DA6
C24DA10

TECHNICAL SERVICE AND PARTS ASSISTANCE - US: 1-800-814-2028 | CANADA: 1-800-444-4764 For additional information on Vulcan or to locate an authorized parts and service provider in your area, visit vulcanequipment.com

VULCAN DIVISION OF ITW FOOD EQUIPMENT GROUP, LLC 3600 NORTH POINT BLVD., BALTIMORE, MD 21222

FORM F43235 Rev. I (March 2026)

 © Vulcan 2026

Table of Contents

4 CONTROLS
6 ELECTRICAL COMPONENTS
8 DOOR
10 COMPARTMENT
12 PANELS
14 PLUMBING
16 DRAIN ASSEMBLY
18 ADJUSTABLE PILOT BURNER ASSEMBLY (BEFORE SN 463024850)
20 DSI BURNER ASSEMBLY (BEFORE SN 463040179)
22 HSI BURNER PARTS (STARTING SN 463040179)
24 GAS GENERATOR TANK ASSEMBLY / SOLENOID VALVES DIRECT
26 STEAM ASSEMBLY

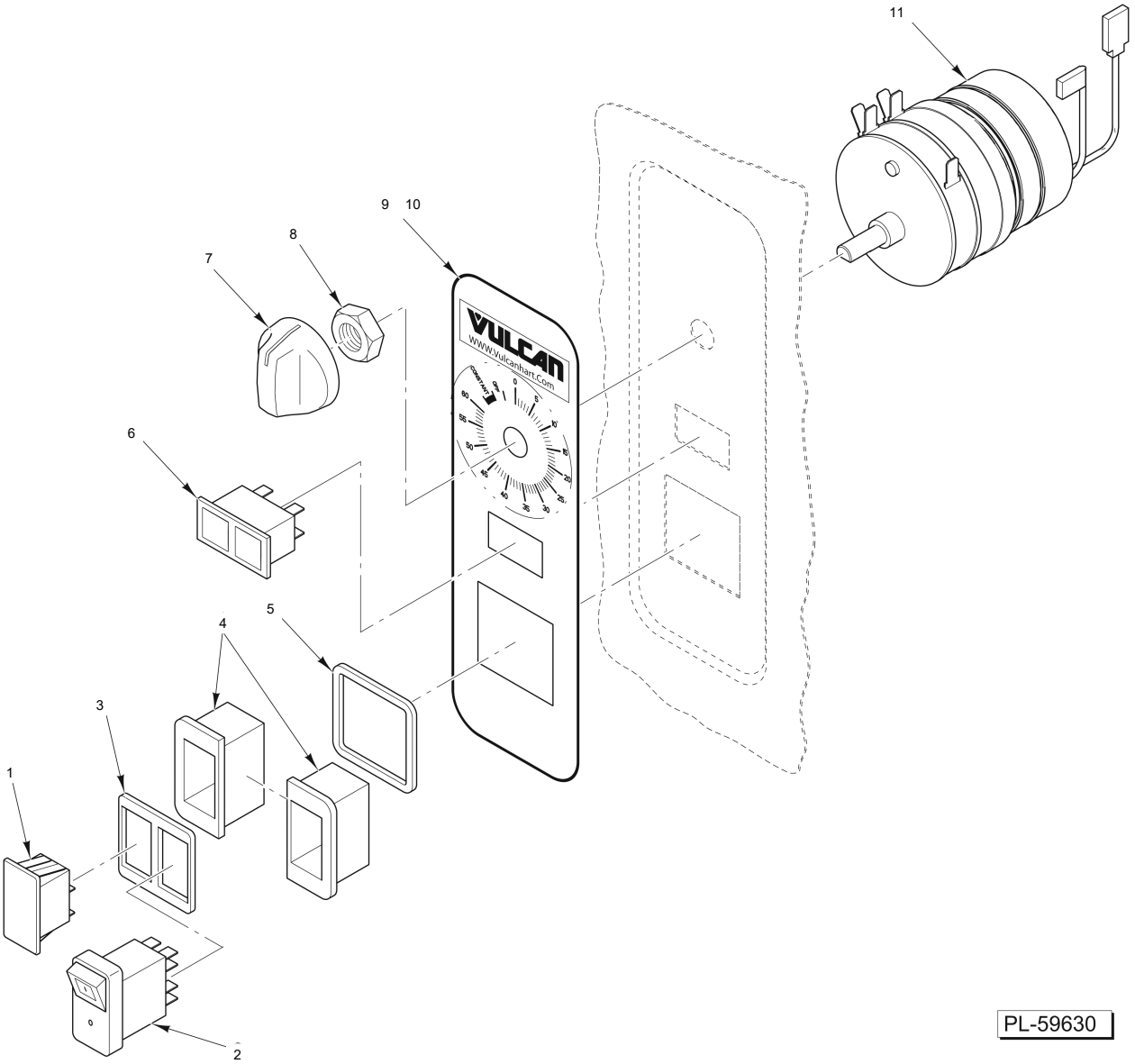

CONTROLS

CONTROLS

ILLUS.	PART NO.	NAME OF PART	AMT.
PL-23756			
1	00-854330-00001	Plug - Switch Hole	1
2	00-855677-00001	Switch - On/Off (Lighted)	1
3	00-855795-00001	Gasket - Switch	1
4	00-855794-00001	Bezel - Switch	2
5	00-855796-00001	Gasket - Bezel	1
6	00-855695-00001	Light - Indicating (125 VAC)	1
7	00-856773-00001	Knob - Timer	1
8	00-854693-00001	Shaft - Rotary Seal	1
9	00-856771-00002	Overlay - Control (Vulcan) (ML-138086)	1
10	00-856771-00001	Overlay - Control (Vulcan) (ML-138085)	1
*11	00-913102-0176A	Kit - Timer (Incls Shaft Seal & Knob)	1

* Previous Construction

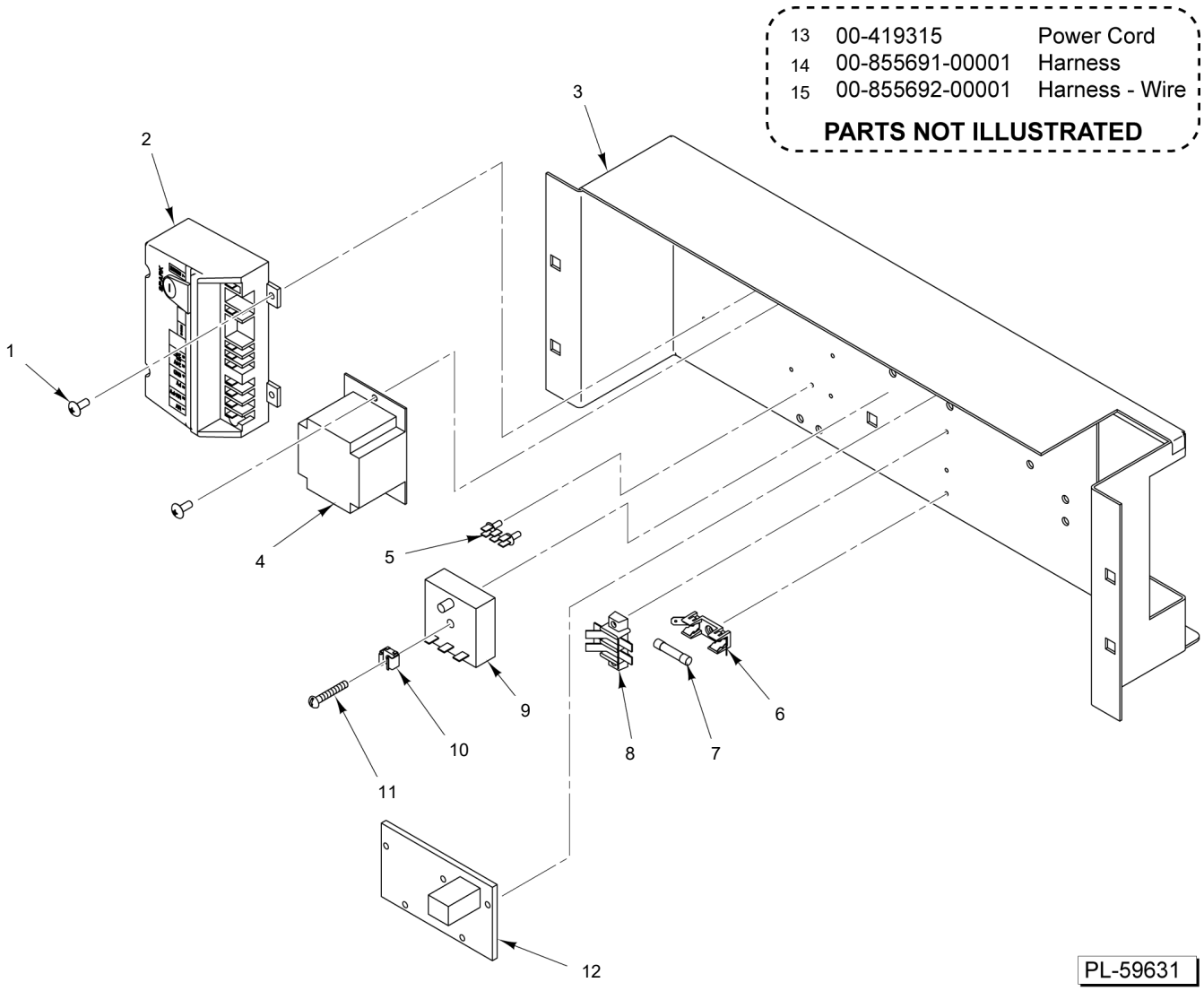

ELECTRICAL COMPONENTS

ELECTRICAL COMPONENTS

ILLUS.	PART NO.	NAME OF PART	AMT.
PL-23757			
1	SD-019-29	Self-Tapping Screw 6-20 x 1/2 Phil. Pan Hd., Type B	10
2	00-857207-00002	Module - Ignition (Before S/N 463024850)	1
3	00-857541-00001	Panel - Control	1
4	00-411500-00012	Transformer (120 VAC, 24 V., 40 VA)	1
5	00-419317	Terminal - Stationary Ground	1
6	00-856677-00001	Block - Fuse (20 Amp., 300 V.)	1
7	FE-024-94	Fuse - Time Delay (4.0 Amp.) (250 V.)	1
8	00-854707-00002	Block - Terminal (2-Pole)	1
9	00-855661-00001	Relay - Time Delay	1
10	NS-049-01	Panel Nut 10-24	1
11	SC-021-96	Mach. Screw 10-24 x 1-1/4 Slotted Rd. Hd. (SST)	1
12	00-844069-00001	Control - Low Water	1
13	00-419315	Power Cord	1
14	00-855691-00001	Harness	1
15	00-855692-00001	Harness - Wire	1

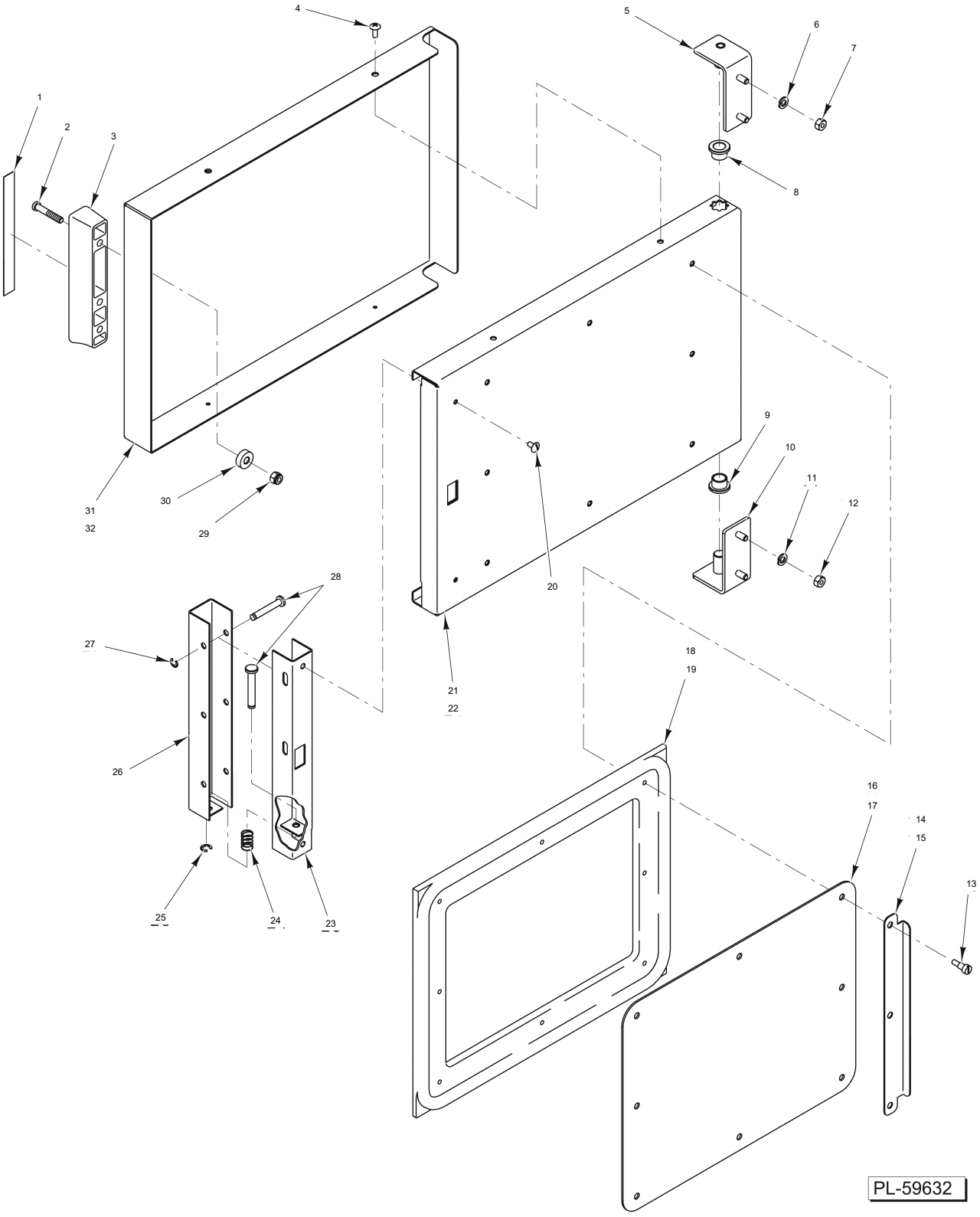
1
2
3
4
5
6
7
8
9
10
11
12
13
14
15
16
17
18
19
20
21
22
23
24
25
26
27
28
29
30
31
32
PL-59632

DOOR

DOOR

ILLUS.	PART NO.	NAME OF PART	AMT.
PL-23758			
1	00-855288-00001	Face Plate - Door Handle	1
2	SC-120-70	Cap Screw 1/4-20 x 1-5/8 Hex Socket Hd.	2
3	00-855287-00001	Handle - Door	1
4	SC-066-20	Mach. Screw 10-32 x 1/2 Phil. Truss Hd. (SST)	4
5	00-855521-00001	Hinge Assy. - Door (Top)	1
6	WL-006-17	Lockwasher 1/4 Helical (SST)	2
7	NS-046-38	Nut 1/4-20 Hex (SST)	2
8	00-817643	Bearing - Flanged	1
9	00-817643	Bearing - Flanged	1
10	00-855521-00002	Hinge Assy. - Door (Bottom)	1
11	WL-006-17	Lockwasher 1/4 Helical (SST)	2
12	NS-046-38	Nut 1/4-20 Hex (SST)	2
13	00-855597-00002	Screw 10-32 x 5/16 Slotted (SST)	8
14	00-855714-00001	Gasket - Door Guard (6-Pan)	1
16	00-855285-00001	Gasket Retainer - Door (6-Pan)	1
15	00-855714-00002	Gasket - Door Guard (10-Pan)	1
17	00-855285-00002	Gasket Retainer - Door (10-Pan)	1
18	00-857085-00001	Kit - Door Gasket (3 Pan) - Cabinet Door (6-Pan) (Incls. Shim Kit)	1
19	00-857085-00002	Kit - Door Gasket (5 Pan) - Cabinet Door (10-Pan) (Incls. Shim Kit)	1
20	SC-053-05	Mach. Screw 10-24 x 3/8 Slotted Truss Hd. (SST)	2
21	00-855582-00001	Bracket Weldment - Door (6-Pan)	1
22	00-855582-00002	Bracket Weldment - Door (10-Pan)	1
23	00-855584-00001	Door Latch - Bracket	1
24	00-855298-00001	Latch Spring - Door	1
25	RR-006-22	Retaining Ring 1/4 In. (SST)	1
26	00-855585-00001	Latch Actuator - Door	1
27	RR-006-22	Retaining Ring 1/4 In. (SST)	3
28	00-855590-00002	Pin - Clevis 1.525 In. Lg.	4
29	NS-048-63	Lock Nut 1/4-20 Hex (SST)	2
30	00-855290-00001	Bearing - Door Handle	2
31	00-855580-00001	Frame - Door (6-Pan)	1
32	00-855580-00002	Frame - Door (10-Pan)	1

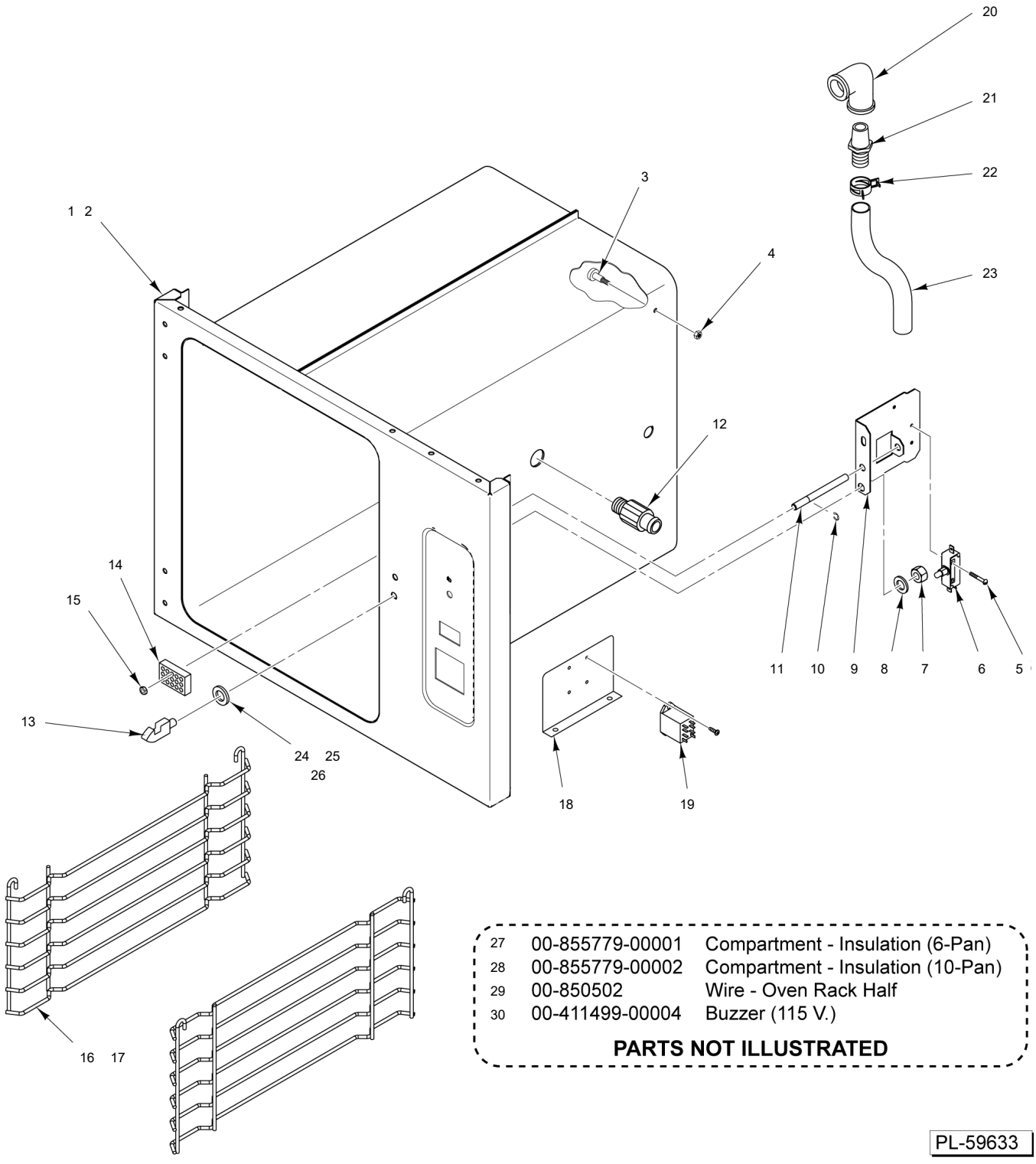

27	00-855779-00001	Compartment - Insulation (6-Pan)
28	00-855779-00002	Compartment - Insulation (10-Pan)
29	00-850502	Wire - Oven Rack Half
30	00-411499-00004	Buzzer (115 V.)

PARTS NOT ILLUSTRATED

PL-59633

COMPARTMENT

COMPARTMENT

ILLUS.	PART NO.	NAME OF PART	AMT.
PL-23759			
1	00-857646-00004	Compartment - Service Kit (3-Pan)	1
2	00-857649-00004	Compartment - Service Kit (5-Pan)	1
3	00-855337-00001	Shoulder Screw 10-32 Slotted (SST)	4
4	NS-049-09	Nut Assy. 10-32 (SST)	4
5	SC-021-12	Mach. Screw 6-32 x 1 Slotted Rd. Hd. (SST)	1
6	00-842049	Switch - Door	1
7	NS-015-13	Nut 3/8-16 Hex (SST)	1
8	WL-006-27	Lockwasher 3/8 Helical (SST)	1
9	00-855308-00001	Actuator Bracket - Door	1
10	RR-011-26	Ring - Retaining	2
11	00-855307-00001	Actuator Rod - Door	1
12	00-857625-00001	Valve - Check	1
13	00-855586-00001	Bullet - Door	1
14	00-855753-00001	Cover - Drain	1
15	NS-011-18	Nut 10-24 Hex (SST)	1
16	00-855355-00001	Rack - Wire (6-Pan)	2
17	00-855355-00002	Rack - Wire (10-Pan)	2
18	00-855675-00001	Bracket - Relay	1
19	00-416535-00006	Relay - Heating (120 V.) Switch	2
20	FP-013-27	Elbow - Pipe 1 x 90 Deg.	1
21	FP-90-19	Fitting - Hose Barb	1
22	00-557847	Clamp - Hose	2
23	00-557477	Hose (1 In. Dia.) (Green)	1
24	00-557691	Shim	1
25	00-557760	Shim (0.005 Thk.) (SST)	1
26	00-557761	Shim (0.010 Thk.) (SST)	1
27	00-855779-00001	Compartment - Insulation (6-Pan)	1
28	00-855779-00002	Compartment - Insulation (10-Pan)	1
29	00-850502	Wire - Oven Rack Half	1
30	00-411499-00004	Buzzer (115 V.)	1

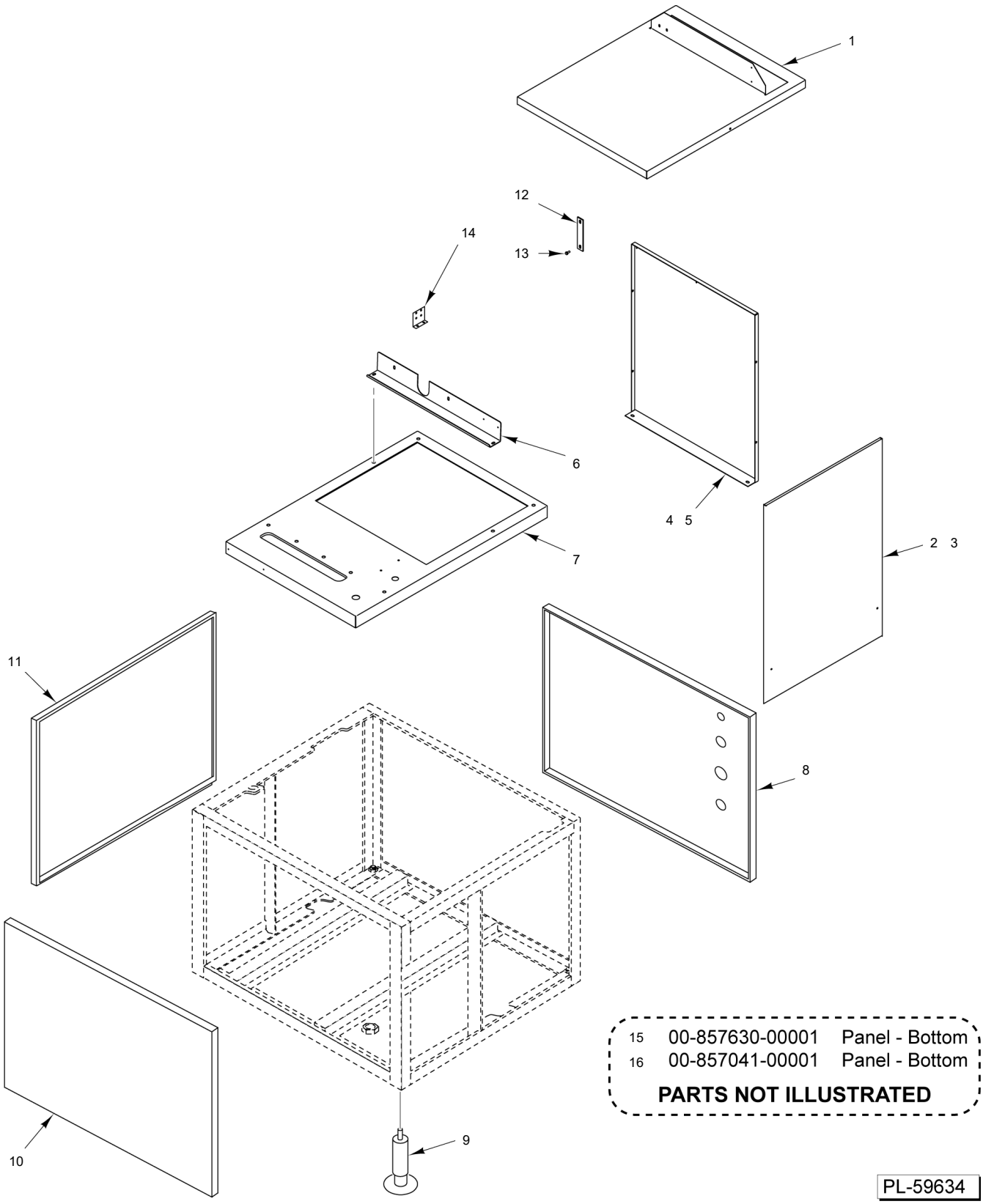

15	00-857630-00001	Panel - Bottom
16	00-857041-00001	Panel - Bottom

PARTS NOT ILLUSTRATED

PL-59634

PANELS

PANELS

ILLUS.	PART NO.	NAME OF PART	AMT.
PL-23760			
1	00-855252-00001	Panel - Top	1
2	00-857616-00001	Side Panel - Cabinet (6-Pan)	2
3	00-857618-00001	Side Panel - Cabinet (10-Pan)	2
4	00-855253-00001	Panel - Cabinet Back (6-Pan)	1
5	00-857619-00001	Panel - Cabinet Back (10-Pan)	1
6	00-857548-00001	Bracket - Support	1
7	00-857617-00001	Tabletop	1
8	00-855663-00001	NLA - Obsolete--Panel - Rear Assy	1
9	00-881526	Foot - Leg & Flange	4
10	00-855663-00002	Panel - Front	1
11	00-855672-00001	Panel - Side	2
12	00-855326-00001	Bracket - Cabinet Compartment Middle	2
13	SD-036-58	Self-Tapping Screw 10-16 x 1/2 Hex. Hex Washer Hd., Type AB	8
14	00-855675-00001	Bracket - Relay	1
15	00-857630-00001	Panel - Bottom (GA Models)	1
16	00-857041-00001	Panel - Bottom (DA Models)	1

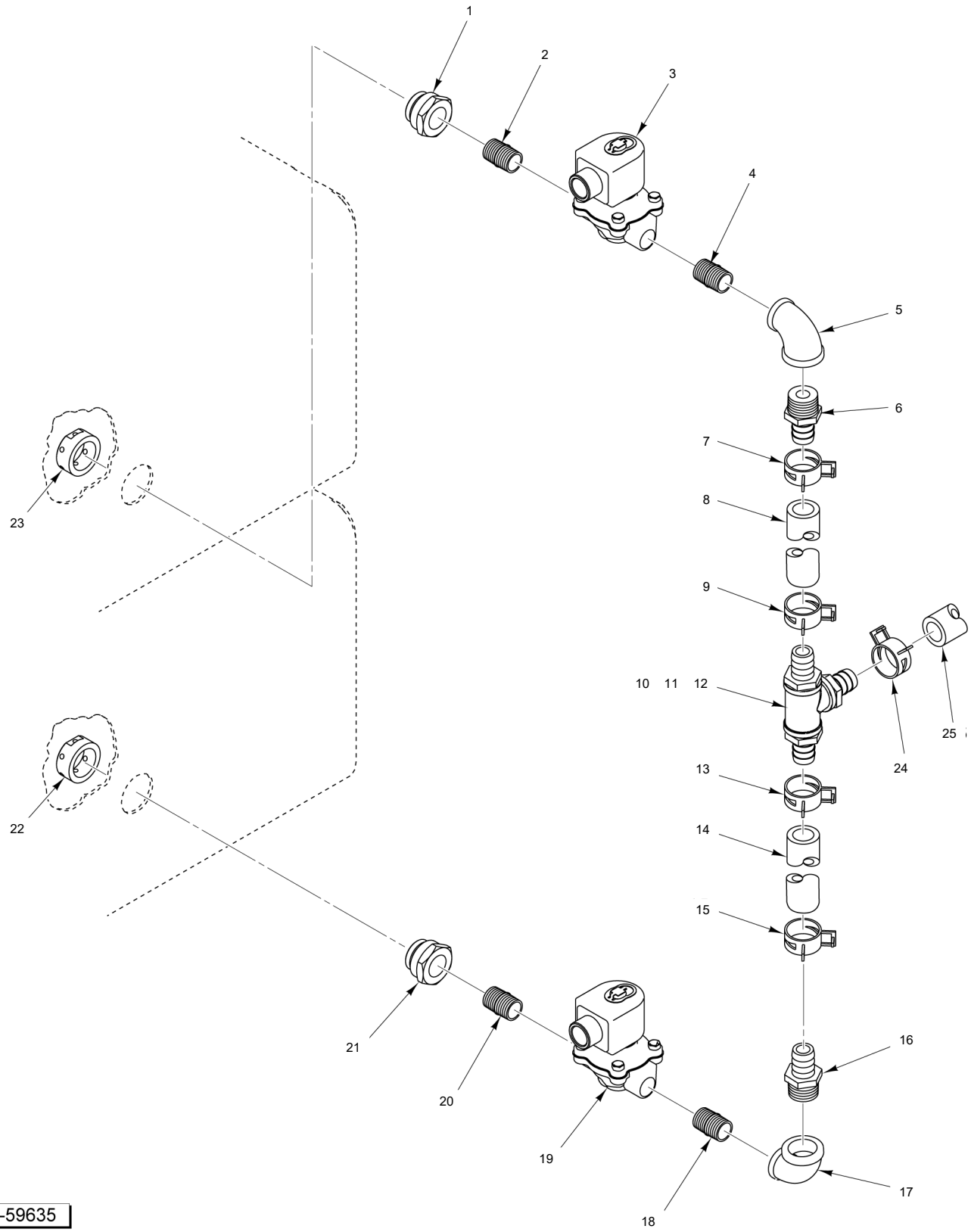

PLUMBING

PLUMBING

ILLUS.	PART NO.	NAME OF PART	AMT.
PL-23761			
1	00-855394-00001	Adapter - Cabinet Steam Port	1
2	FP-054-08	Pipe 1/2 x 1-1/8 TBE (SST)	1
3	00-857443-00001	Valve 1/2 NPT	1
4	FP-054-08	Pipe 1/2 x 1-1/8 TBE (SST)	1
5	FP-016-12	Elbow - Reducing 3/4 x 1/2 x 90 Deg. (Brass)	1
6	FP-091-08	Fitting - Pipe 3/4 Hose to 3/4 MPT (Brass)	1
7	00-557846	Clamp - Hose (29mm)	1
8	00-557792	Steam Line - Lower (3/4 In. I.D. High Temperature)	0
9	00-557846	Clamp - Hose (29mm)	1
10	FP-019-28	Tee - Pipe 3/4 x 3/4 x 3/4 (Brass) Tee - Tubing Barbed (Brass)	1
11	FP-019-28	Tee - Pipe 3/4 x 3/4 x 3/4 (Brass)	2
12	FP-091-08	Fitting - Pipe 3/4 Hose to 3/4 MPT (Brass)	1
13	00-557846	Clamp - Hose (29mm)	1
14	00-557792	Steam Line - Lower (3/4 In. I.D. High Temperature)	0
15	00-557846	Clamp - Hose (29mm)	1
16	FP-091-08	Fitting - Pipe 3/4 Hose to 3/4 MPT (Brass)	1
17	FP-016-12	Elbow - Reducing 3/4 x 1/2 x 90 Deg. (Brass)	1
18	FP-054-08	Pipe 1/2 x 1-1/8 TBE (SST)	1
19	00-857443-00001	Valve 1/2 NPT	1
20	FP-054-08	Pipe 1/2 x 1-1/8 TBE (SST)	1
21	00-855394-00001	Adapter - Cabinet Steam Port	1
22	00-856753-00001	Port - Low Pressure Steam	1
23	00-856753-00001	Port - Low Pressure Steam	1
24	00-557846	Clamp - Hose (29mm)	1
25	00-557792	Steam Line - Lower (3/4 In. I.D. High Temperature)	0

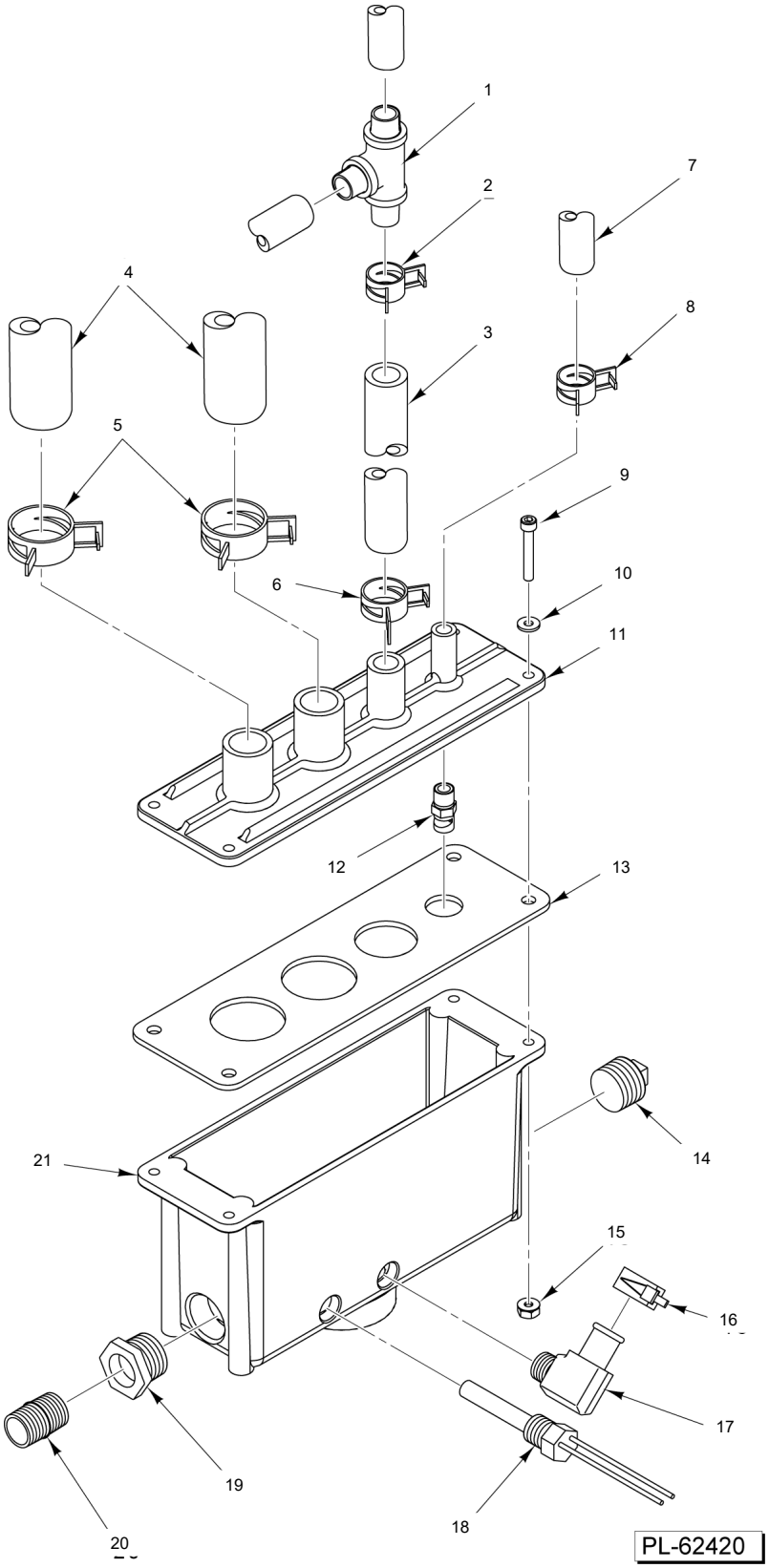

DRAIN ASSEMBLY

DRAIN ASSEMBLY

ILLUS.	PART NO.	NAME OF PART	AMT.
PL-38661			
1	FP-090-94	Tee - Tubing (1/2 In.) (Brass)	1
2	00-557844	Clamp - Hose (19mm)	1
3	00-557474	Hose 1/2 ID x 0.830 OD (3 Ft.)	1
4	00-557477	Hose (4 Ft.)	0
5	00-557847	Clamp - Hose (35mm)	2
6	00-557845	Clamp - Hose (24mm)	1
7	00-557681	Hose - Condensate Box Line (14 In.)	0
8	00-557970	Clamp - Hose (20mm)	1
9	SC-119-74	Screw Cap 10-24 x 1 1/4	4
10	WS-019-20	Washer 0.203 x 0.438 x 0.062 (SST)	4
11	00-857244-00001	Lid - Box Condensate	1
12	00-857626-00001	Nozzle - Spray (1/8 In.)	1
13	00-858497-00001	Gasket	1
14	FP-028-19	Pipe Plug 3/4 Sq. Hd. (Brass)	1
15	NS-048-23	Nut Assy. 10-24 KEPS (SST)	4
16	00-557970	Clamp - Hose (20mm)	1
17	FP-090-56	Fitting - Hose 1/2 x 90 Deg. (Brass)	1
18	00-855607-00001	Thermostat - Condensate (130 Deg. F.)	1
19	FP-027-22	Bushing - Pipe 3/4 to 1/2 (Brass)	1
20	FP-040-42	Pipe 1/2 x 1-1/8 TBE (Brass)	1
21	00-857242-00001	Box - Condensate Kit (Incls. lid, nozzle, hardware, and gasket)	0

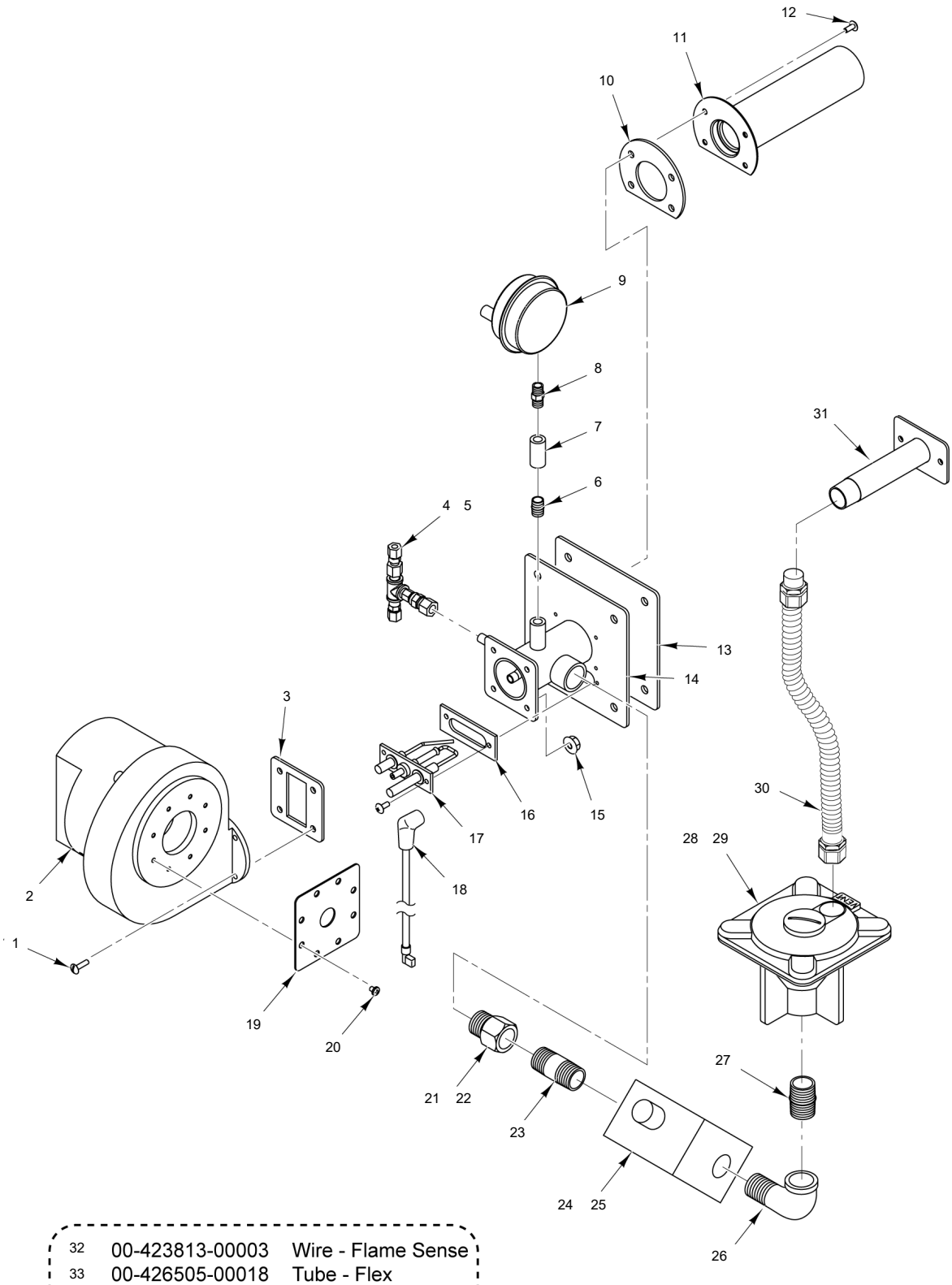

32	00-423813-00003	Wire - Flame Sense
33	00-426505-00018	Tube - Flex

PARTS NOT ILLUSTRATED

ADJUSTABLE PILOT BURNER ASSEMBLY (Before SN 463024850)

ADJUSTABLE PILOT BURNER ASSEMBLY
(Before SN 463024850)

ILLUS.	PART NO.	NAME OF PART	AMT.
PL-23763			
1	SC-053-03	Mach. Screw 10-24 x 3/4 Slotted Truss Hd. (SST)	4
2	00-855605-00001	Blower - Variable Speed	1
3	00-855649-00001	Gasket - Blower	1
4	00-855601-00001	Pilot - Natural Air Assy..	1
5	00-855601-00002	Pilot - Propane Air Assy.	1
6	FP-081-93	Pipe 1/8 x 3/4 TBE (Brass)	1
7	FP-090-08	Coupling - Pipe 1/8 TBE (SST)	1
8	00-851833-00001	Orifice - Air	1
9	00-850778-00001	Switch - Air Pressure	1
10	00-855626-00001	Gasket - Burner	1
11	00-855646-00001	Burner - Aconit	1
12	SC-066-06	Mach. Screw 10-24 x 1/2 Phil. Truss Hd. (SST)	4
13	00-855625-00001	Gasket - Burner Plate	1
14	00-855640-00001	Burner - Adaptor Weld	1
15	NS-038-13	Lock Nut 10-24 Hex	4
16	00-855628-00001	Gasket - Pilot	1
17	00-855627-00001	Pilot	1
18	00-857210-00005	Cable - Ignitnor W/ Strain Relief	1
19	00-855647-00001	Orifice - Air	1
20	SC-110-87	Mach. Screw #10-32 x 1/4 Phil. Pan Hd.	8
21	00-852984-00012	Orifice (NAT)	1
22	00-852984-00010	Orifice (LP)	1
23	FP-036-02	Pipe 3/4 x 2-1/2 TBE	1
24	00-844133-00001	Valve - Comb. Natural 3-1/2 In.	1
25	00-844133-00002	Valve - Comb. (3-1/2 In.) (10 In. W.C.) (LP)	1
26	FP-078-86	Elbow - Street 3/4 x 90 Deg.	1
27	FP-036-92	Pipe 3/4 x 1-3/8 TBE (Black)	1
28	00-408279-00025	Regulator - Pressure 3/4 In. (NAT)	1
29	00-408279-00029	Regulator - Pressure 3/4 (LP)	1
30	00-851318-00001	Flex Line Gas	1
31	00-855670-00001	Support - Gas Pipe	1
32	00-961683-000G1	Kit - High Voltage Wire Wire - Flame Sense	1
33	00-426505-00018	Tube - Flex (1/4 x 18 In.) Tubing - Pilot	1
34	00-858825-00001	Gas Blower and Valve Assy. (NAT)	0

14 Wire - Flame Sensing
15 Wire - Ignition
16 Harness - Wire
17 Line - 18” Gas
18 Cover - Mylar
19 Regulator - Pressure 3/4 In. (NAT)
20 Regulator - Pressure 3/4 In. (LP)
21 Burner Gas Blower Assy.

PARTS NOT ILLUSTRATED

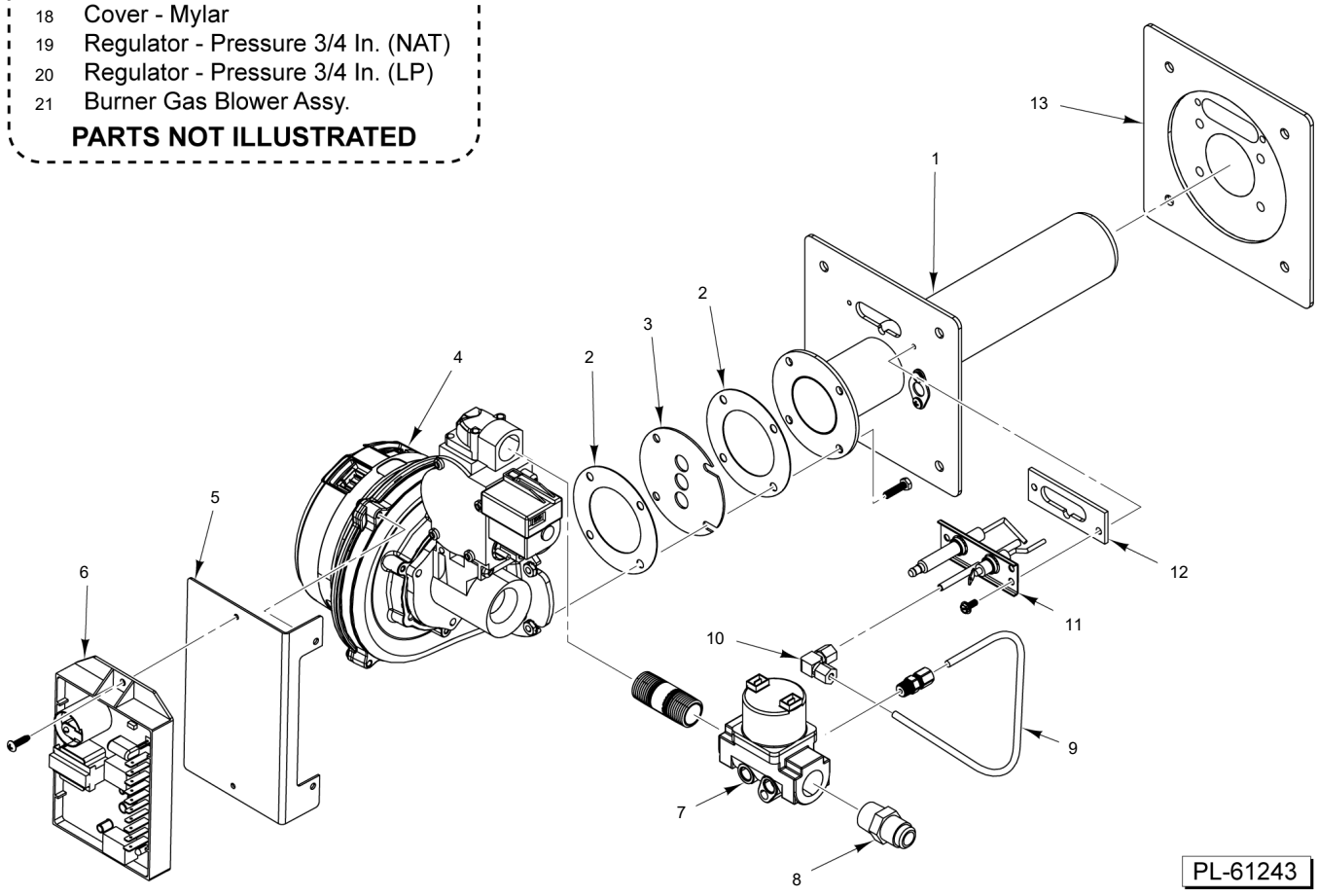

DSI BURNER ASSEMBLY
(Before SN 463040179)

DSI BURNER ASSEMBLY
(Before SN 463040179)

ILLUS.	PART NO.	NAME OF PART	AMT.
PL-31156			
1	00-858579-00002	Burner Head	1
2	00-858579-00008	Gasket - Restrictor Plate	2
3	00-858579-00003	Plate - Restrictor	1
4	00-858579-00006	Blower/Valve Assy.	1
5	00-858579-00005	Bracket - IDC Mounting	1
6	00-858579-00011	Ignition Module - Fenwall	1
7	00-858579-00009	Valve - Gas	1
8	00-858579-00017	Holder - Orifice / Valve Fitting	1
9	00-858579-00007	Hose - Gas Flex	1
10	00-858579-00010	Universal Gas Orifice Assy.	1
*11	00-858579-00014	Electrode/Pilot Assy.	1
12	00-858579-00016	Gasket - Electrode/Pilot Assy.	1
13	00-855625-00001	Gasket - Burner Plate	1
14	00-858579-00020	Wire - Flame Sensing	1
15	00-858579-00021	Wire - Ignition	1
16	00-858579-00022	Harness - Wire	1
17	00-858579-00023	Line - 18" Gas	1
18	00-855780-00001	Cover - Mylar	1
19	00-408279-00025	Regulator - Pressure 3/4 In. (NAT)	1
20	00-408279-00029	Regulator - Pressure 3/4 (LP)	1
**21	00-858739-00001	Burner Gas Blower Assy includes Mylar Sheet, Schematic and Hardware.	1

* Order Items 10 & 12 with this part.
** DSI burner parts cannot be used on the Direct Spark (HSI) burner.

11 Cord - Burner, Rectifier (HSI)

PART NOT ILLUSTRATED

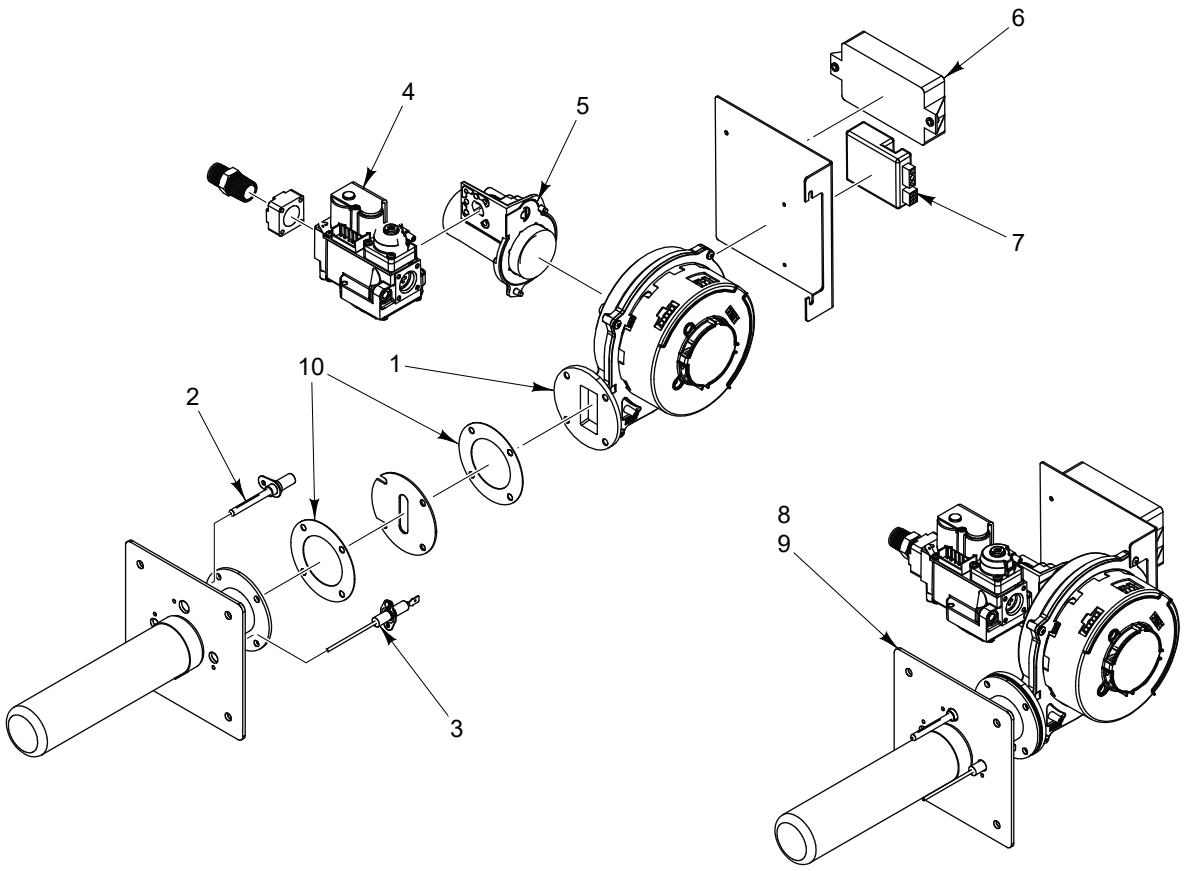

PL-62222

HSI BURNER PARTS
(Starting SN 463040179)

HSI BURNER PARTS
(Starting SN 463040179)

ILLUS.	PART NO.	NAME OF PART	AMT.
PL-37428			
1	00-858844	Blower - Burner (HSI)	1
2	00-858851	Igniter - Hot Surface	1
3	00-858852	Sensor - Flame (HSI)	1
4	00-858848	Valve - Gas (HSI)	1
5	00-858847	Venturi - Burner (HSI)	1
6	00-858846	Control - Ignition (HSI)	1
7	00-858845	Control - Soft Start (HSI)	1
8	00-858825-00001	Gas Blower and Valve Assy. (NAT)	1
9	00-858825-00002	Gas Blower and Valve Assy. (LP)	1
10	00-858579-00008	Gasket - Restrictor Plate	1
11	00-858855	Cord - Burner, Rectifier (HSI)	1

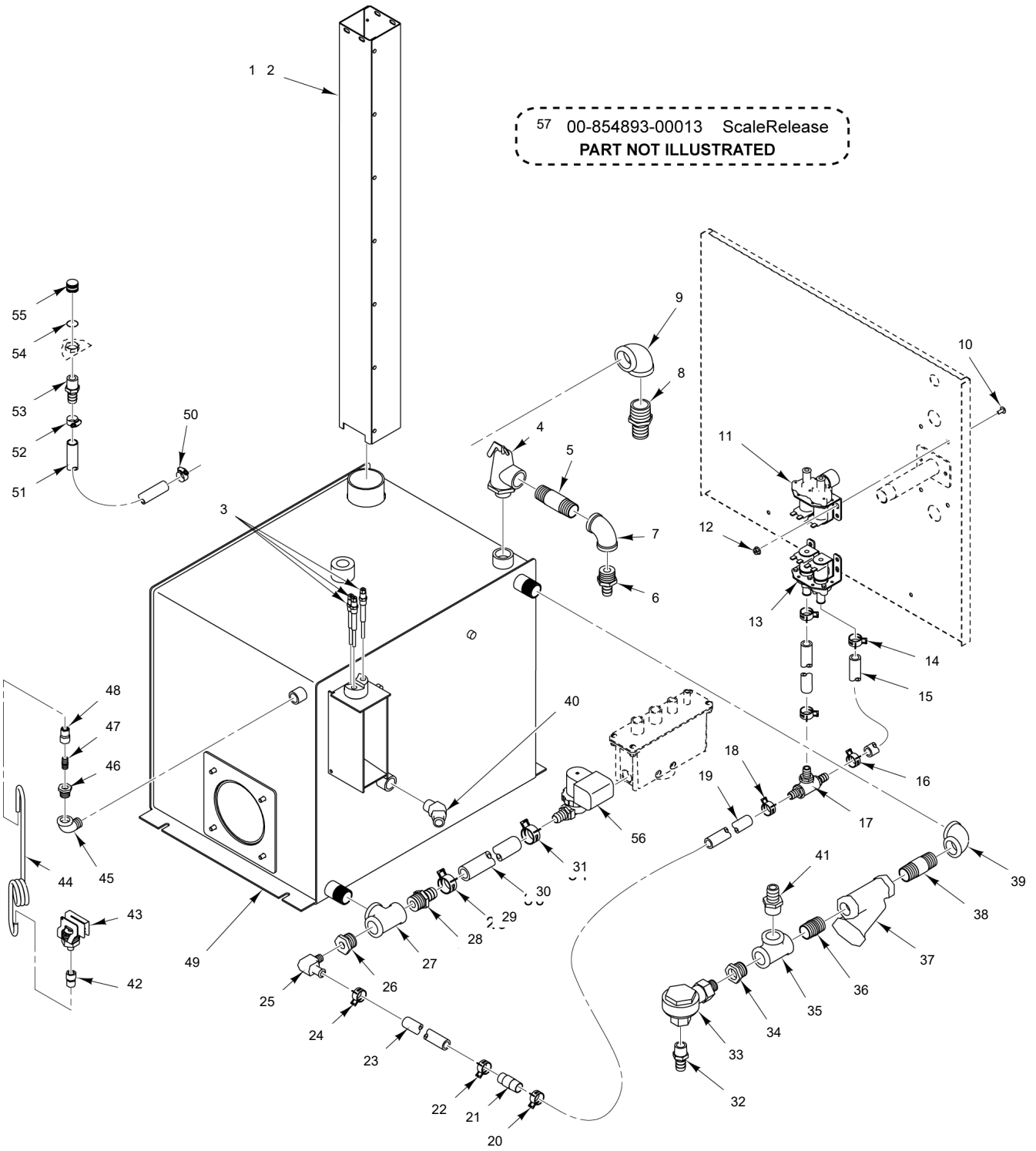

GAS GENERATOR TANK ASSEMBLY / SOLENOID VALVES

GAS GENERATOR TANK ASSEMBLY / SOLENOID VALVES

ILLUS. PL-23764	PART NO.	NAME OF PART	AMT.
1	00-857621-00001	Flue Assy. (6-Pan)	1
2	00-857623-00001	Flue Assy. (10-Pan)	1
3	00-857046-00002	Probe - Water Level	3
4	00-855606-00001	Valve - Relief 3/4 In. 5 PSI	1
5	FP-041-66	Pipe 3/4 x 3 TBE (Brass)	1
6	FP-090-31	Fitting - Hose 5/8 Hose to 3/4 MPT (Brass)	1
7	FP-013-27	Elbow - Pipe 1/2 x 90 Deg.	1
8	FP-090-19	Fitting - Hose (11 In.)	1
9	FP-013-27	Elbow - Pipe 1/2 x 90 Deg.	1
10	SC-066-06	Mach. Screw 10-24 x 1/2 Phil. Truss Hd. (SST)	8
11	00-856720-00001	Valve - Dual Water (3.8 GPM) Drain Cooling & Cavity Cold Water Condensate	1
12	NS-038-13	Lock Nut 10-24 Hex	8
13	00-856720-00003	Valve - Dual Water (0.50 GPM / 3.8 GPM) Generator Fast & Slow Fill	1
14	00-557844	Clamp - Hose (19mm)	1
15	00-557681	Hose - Water Supply 1/2 x 1/8 (Clear PVC)	0
16	00-557844	Clamp - Hose (19mm)	1
17	FP-090-94	Tee - Tubing (1/2 In.) (Brass)	1
18	00-557844	Clamp - Hose (19mm)	1
19	00-557681	Hose - Water Supply 1/2 x 1/8 (Clear PVC)	0
20	00-557844	Clamp - Hose (19mm)	1
21	00-857179-00001	Valve - Check	2
22	00-557844	Clamp - Hose (19mm)	1
23	00-557681	Hose - Water Supply 1/2 x 1/8 (Clear PVC)	0
24	00-557844	Clamp - Hose (19mm)	1
25	FP-090-56	Fitting - Hose 5/8 x 90 Deg. (Brass)	1
26	FP-027-16	Bushing - Pipe 3/4 to 3/8 (Brass)	1
27	FP-019-28	Tee - Pipe 3/4 x 3/4 x 3/4 (Brass)	1
28	FP-091-08	Fitting - Pipe 3/4 Hose to 3/4 MPT (Brass)	1
29	00-557579	Clamp - Hose	1
30	00-557792	Hose (White) (3/4 In.)	1
31	00-557846	Clamp - Hose (29mm)	1
32	FP-087-39	Fitting - Hose 5/8 Hose to 1/2 NPT (Brass)	1
33	00-856005-00001	Trap Radiator - 1/2" Trap - Radiator (1/2 In.)	1
34	FP-027-22	Bushing - Pipe 3/4 to 1/2 (Brass)	1
35	FP-019-28	Tee - Pipe 3/4 x 3/4 x 3/4 (Brass)	1
36	FP-041-50	Pipe 3/4 x 1-3/8 TBE (Brass)	1
37	00-186922	Strainer - Line (3/4 In.) (Brass)	1
38	FP-041-59	Pipe 3/4 x 2 1/2 TBE (Brass)	1
39	FP-015-23	Elbow 3/4 x 90 Deg. (Brass)	1
40	FP-090-18	Fitting - Hose 5/8 to 1/2 Elbow (Brass)	1
41	FP-091-08	Fitting - Hose 3/4 to 3/4 Straight (Brass)	1
42	FP-012-10	Fitting - Tube 1/4 TBG x 1/8 FPT (Brass)	1
*43	00-854471	Switch - Pressure (5 PSI)	1
44	00-857178-00001	Coil - Condensate	1
45	FP-015-10	Elbow - Street 3/8 x 90 Deg. (Brass)	1
46	FP-027-04	Bushing - Pipe 3/8 to 1/8 (Brass)	1
47	FP-081-93	Pipe 1/8 x 3/4 TBE (Brass)	1
48	FP-012-10	Fitting - Tube 1/4 TBG x 1/8 FPT (Brass)	1
49	00-857684-00001	Kit - Universal Generator Includes Probes	1
50	00-557970	Clamp - Hose (20mm)	1
51	00-557475	Hose 5/8 ID x 0.955 OD (1.66 Ft.) (Blue)	0
52	00-557970	Clamp - Hose (20mm)	1
53	FP-090-37	Fitting - Pipe (3/8 In.) (Brass)	1
54	00-856769-00001	O-Ring 1/8 In. Thk.	1
55	FP-090-60	Fitting - Hose (Round Hose Cap 3/4 NH Thread) (Brass)	1
56	00-435968-00001	Valve - Solenoid (1/2 In.) (110-120 V.)	1
57	00-854893-00013	ScaleRelease (14 Oz.)	2

* The operating pressure switch from the factory on production units is not adjustable.

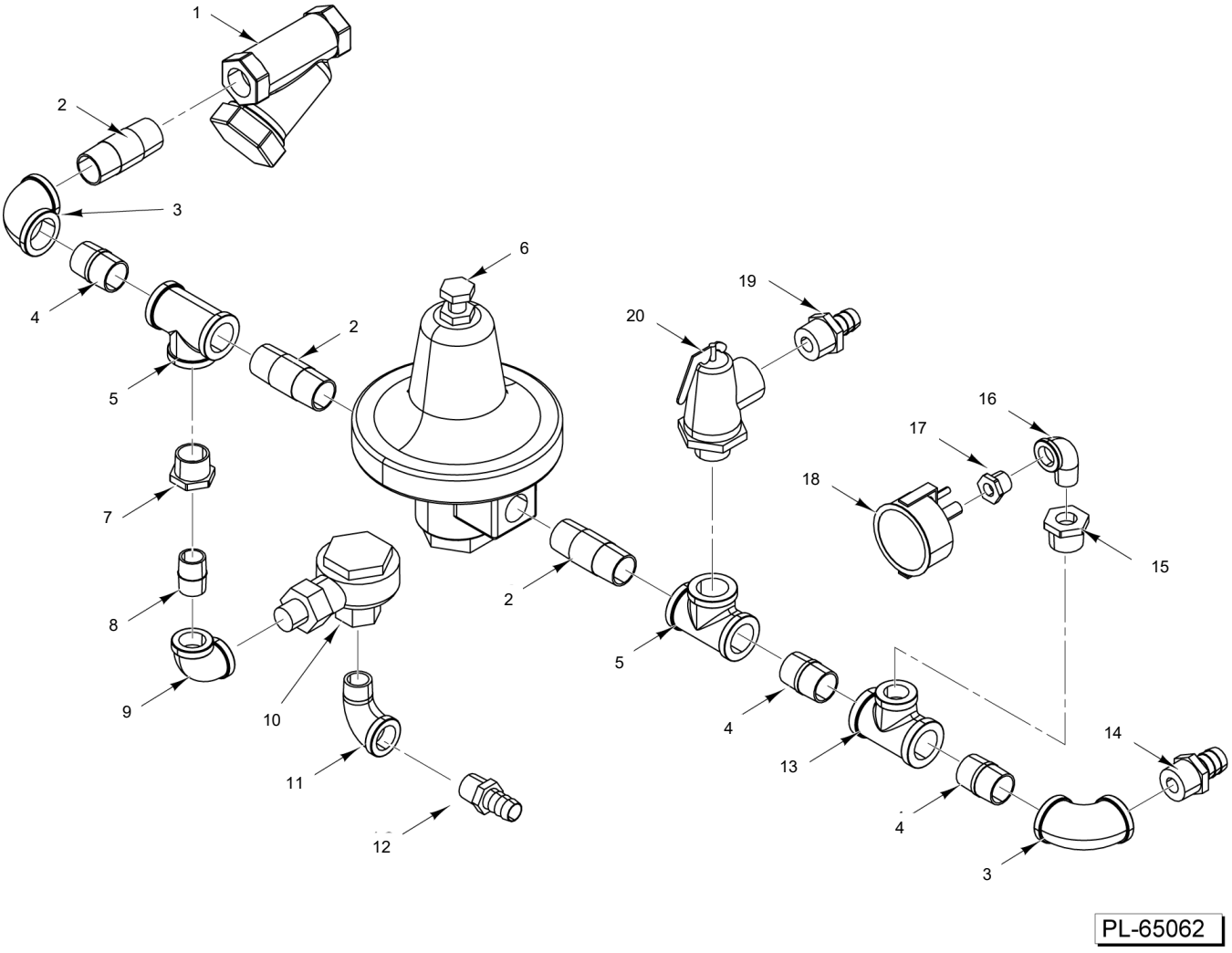

DIRECT STEAM ASSEMBLY

DIRECT STEAM ASSEMBLY

ILLUS.	PART NO.	NAME OF PART	AMT.
PL-29546			
1	00-186922	Strainer - Line (3/4 In.) (Brass)	1
2	FP-041-59	Pipe 3/4 x 2 1/2 TBE (Brass)	3
3	FP-015-23	Elbow 3/4 x 90 Deg. (Brass)	2
4	FP-041-50	Pipe 3/4 x 1-3/8 TBE (Brass)	3
5	FP-019-28	Tee - Pipe 3/4 x 3/4 x 3/4 (Brass)	2
6	00-880028	Valve, Pressure Reducing	1
7	FP-027-22	Bushing - Pipe 3/4 to 1/2 (Brass)	1
8	FP-040-42	Pipe 1/2 x 1-1/8 TBE (Brass)	1
9	FP-015-16	Elbow - Pipe 1/2 x 90 Deg. (Brass)	1
10	00-856005-00001	Trap Radiator - 1/2"	1
11	FP-015-17	Elbow - Pipe 1/2 x 90 Deg. (Brass)	1
12	FP-087-39	Fitting - Hose 5/8 Hose to 1/2 NPT (Brass)	1
13	FP-019-33	Tee - Pipe 3/4 x 3/4 x 1/2	1
14	FP-091-08	Fitting - Pipe 3/4 Hose to 3/4 MPT (Brass)	1
15	FP-027-16	Bushing - Pipe 3/4 to 3/8 (IB57 & 140)	1
16	FP-015-10	Elbow - Street 3/8 x 90 Deg.	1
17	FP-027-04	Bushing - Pipe 3/8 to 1/8 (Brass)	1
18	00-833152	Gauge - Pressure	1
19	FP-090-31	Fitting - Hose 5/8 Hose to 3/4 MPT (Brass)	1
20	00-855606-00001	Valve - Relief 3/4 In. 5 PSI	1