CATALOG OF REPLACEMENT PARTS



C24EA SERIES STEAMERS

C24EA3 BASIC

ML-136043	**(208/240 V.)**
ML-136045	**(480 V.)**

C24EA3 PRO

ML-136037	**(208/240 V.)**
ML-136044	**(480 V.)**

C24EA5 BASIC

ML-136046	**(208/240 V.)**
ML-136048	**(480 V.)**

C24EA5 PRO

ML-136038	**(208/240 V.)**
ML-136047	**(480 V.)**

 © VULCAN-HART COMPANY 2022

Table of Contents

5 CONTROLS
7 ELECTRICAL COMPONENTS
9 ELECTRICAL COMPONENTS (SONIC SAFE)
11 LINE CONTROLS (LWE)
13 CABINET
15 DOOR
17 COMPARTMENT
19 GENERATOR MANIFOLD (3-PAN)
21 GENERATOR MANIFOLD (5-PAN)
23 GENERATOR ASSEMBLY (BEFORE S/N 463003747)
25 GENERATOR ASSEMBLY (S/N 463003747 THRU S/N 463023094)
27 GENERATOR ASSEMBLY (STARTING S/N 463023094)
29 WATER LEVEL PROBE (BEFORE S/N 463003747)
31 CABINET VALVE
33 GENERATOR DRAIN - BASIC
35 GENERATOR DRAIN - PRO
37 COMPARTMENT VACUUM BREAKER

16 00-856744-00001 Harness - Wiring (Basic)
17 00-856745-00001 Harness - Wiring (Pro)

PARTS NOT ILLUSTRATED

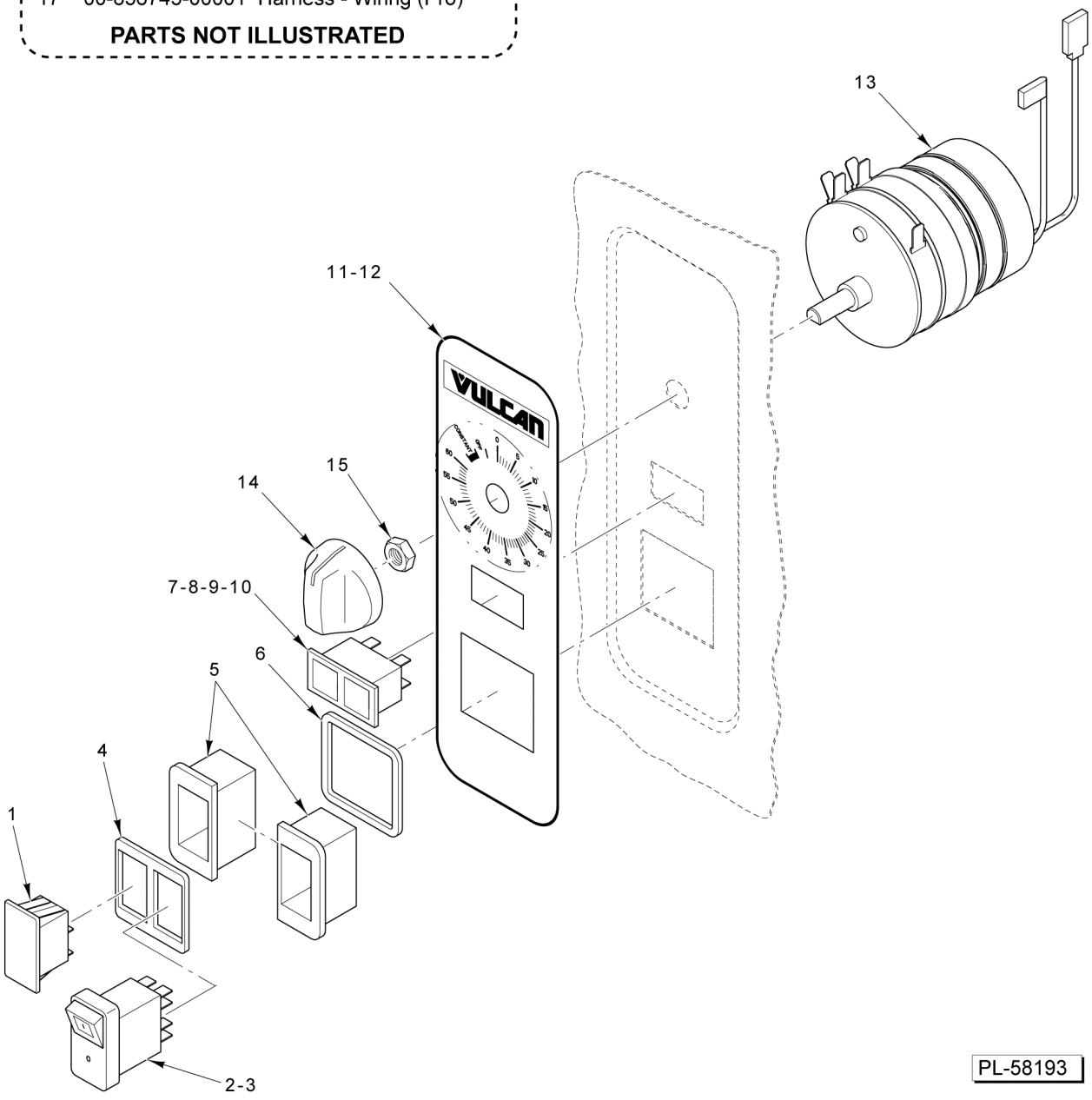

CONTROLS

CONTROLS

ILLUS. PL-58193	PART NO.	NAME OF PART	AMT.
1	00-856680-00001	Plug - Blank Assy	1
2	00-855677-00001	Switch - On/Off (Lighted) (Pro & LWE)	1
3	00-856754-00001	Power Light (Basic) (Not Shown)	1
4	00-855795-00001	Gasket - Switch	1
5	00-855794-00001	Bezel - Switch	2
6	00-855796-00001	Gasket - Bezel	1
7	00-856679-00001	Light - Indicating Assy. (Pro)	1
8	00-913102-00264	Light - Indicating (125 VAC) (LWE)	1
9	00-856680-00001	Plug - Blank Assy. (Basic) (Not Shown)	1
10	00-856680-00001	Plug - Blank Assy	1
11	00-856771-00001	Overlay - Control (Vulcan) (Basic)	1
12	00-856771-00002	Overlay - Control (Vulcan) (Pro)	1
13	00-913102-0176A	Kit - Timer (Incls Shaft Seal & Knob) (Incls. Items 14 & 15)	1
14	00-856773-00001	Knob - Timer	1
15	00-854693-00001	Shaft - Rotary Seal	1
16	00-856744-00001	Harness - Wiring (Basic)	1
17	00-856745-00001	Harness - Wiring (Pro)	1

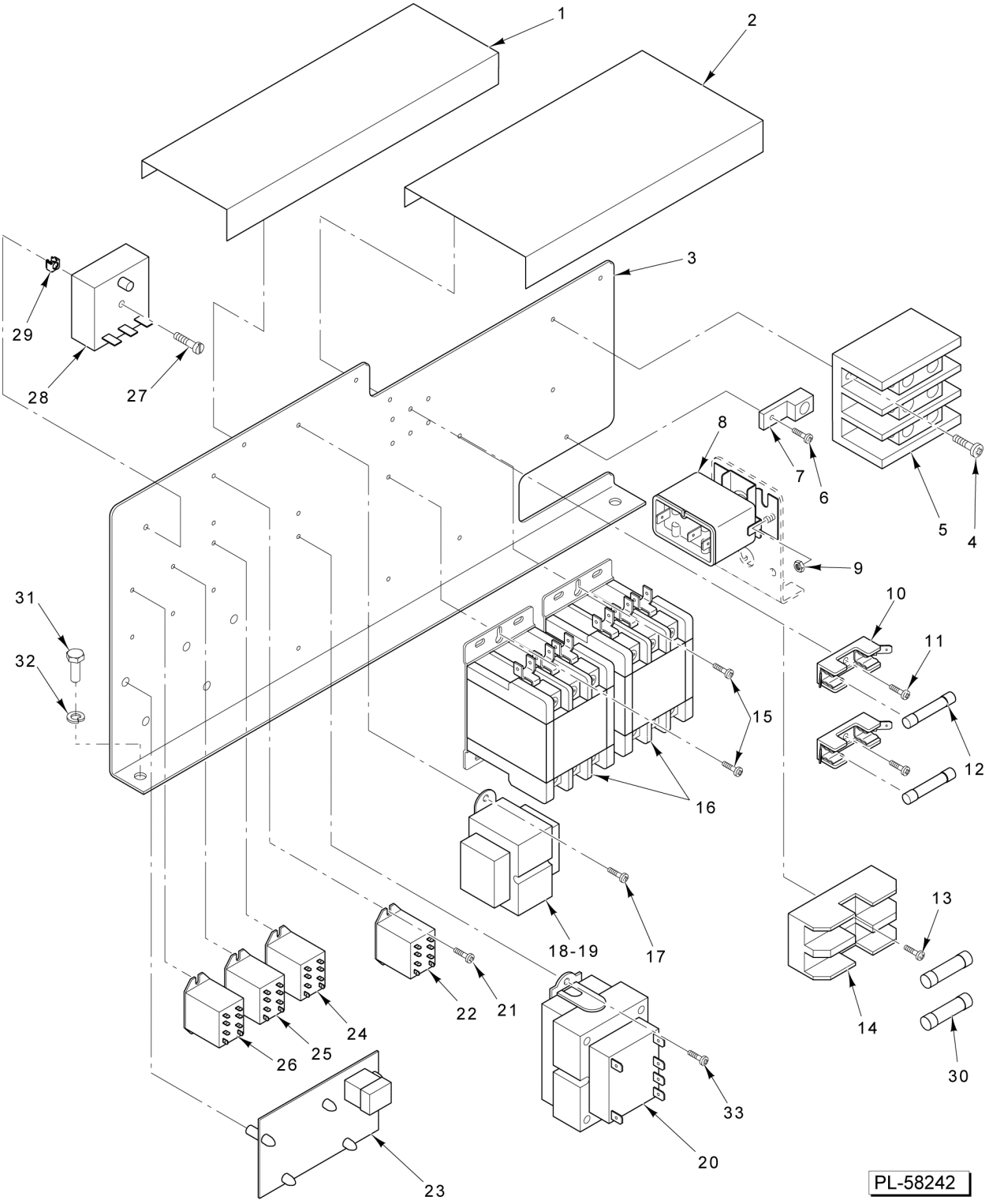

ELECTRICAL COMPONENTS

ELECTRICAL COMPONENTS

ILLUS. PL-58242	PART NO.	NAME OF PART	AMT.
1	00-856762-00001	Shield - Mylar (9-1/2 In.)	1
2	00-856762-00002	Shield - Mylar (9 In.)	1
3	00-856618-00001	Plate - Mounting	1
4	SD-019-29	Self-Tapping Screw 6-20 x 1/2 Phil. Pan Hd., Type B	2
5	00-410472-00008	Block - Terminal (3-Pole)	1
6	SD-019-29	Self-Tapping Screw 6-20 x 1/2 Phil. Pan Hd., Type B	1
7	FE-023-88	Lug - Ground	1
8	00-913102-00404	Kit - High Limit Probe (Includes Clip)	1
9	NS-011-18	Nut 10-24 Hex (SST)	1
10	00-856677-00001	Block - Fuse (208/240 V.)	2
11	SD-019-29	Self-Tapping Screw 6-20 x 1/2 Phil. Pan Hd., Type B	2
12	FE-024-94	Fuse (250 V., 4 Amp.)	2
13	SD-019-29	Self-Tapping Screw 6-20 x 1/2 Phil. Pan Hd., Type B	2
14	00-855028-00001	Block - Fuse (480 V.)	1
15	SD-019-29	Self-Tapping Screw 6-20 x 1/2 Phil. Pan Hd., Type B	4
16	00-881654	Contactor (40 Amp, 3 Pole)	2
17	SD-019-29	Self-Tapping Screw 6-20 x 1/2 Phil. Pan Hd., Type B	2
18	00-421758-000G1	Transformer (120 V.) (24 V. Output) (Pro)	1
19	00-411500-00012	Transformer (120 VAC, 24 V., 40 VA) (LWE)	1
20	00-294500-00033	Transformer (60 VA, 50/60 Hz.)	1
21	SD-019-29	Self-Tapping Screw 6-20 x 1/2 Phil. Pan Hd., Type B	AR
22	00-856699-00001	Switch - Relay (Pro)	1
23	00-844069-00001	Control - Low Water	1
24	00-856699-00001	Switch - Relay (K3)	1
25	00-856699-00001	Switch - Relay (K2)	1
26	00-856699-00001	Switch - Relay (K1)	1
27	SC-021-96	Mach. Screw 10-24 x 1-1/4 Slotted Rd. Hd. (SST)	1
28	00-855661-00001	Relay - Time Delay	1
29	NS-049-01	Panel Nut 10-24	1
30	00-423986-00001	Fuse (KTK-R-3) (480 V.)	2
31	SC-041-01	Cap Screw 1/4-20 x 3/4 Hex Hd. (SST)	2
32	WL-006-17	Lockwasher 1/4 Helical (SST)	2
33	SD-019-29	Self-Tapping Screw 6-20 x 1/2 Phil. Pan Hd., Type B	2

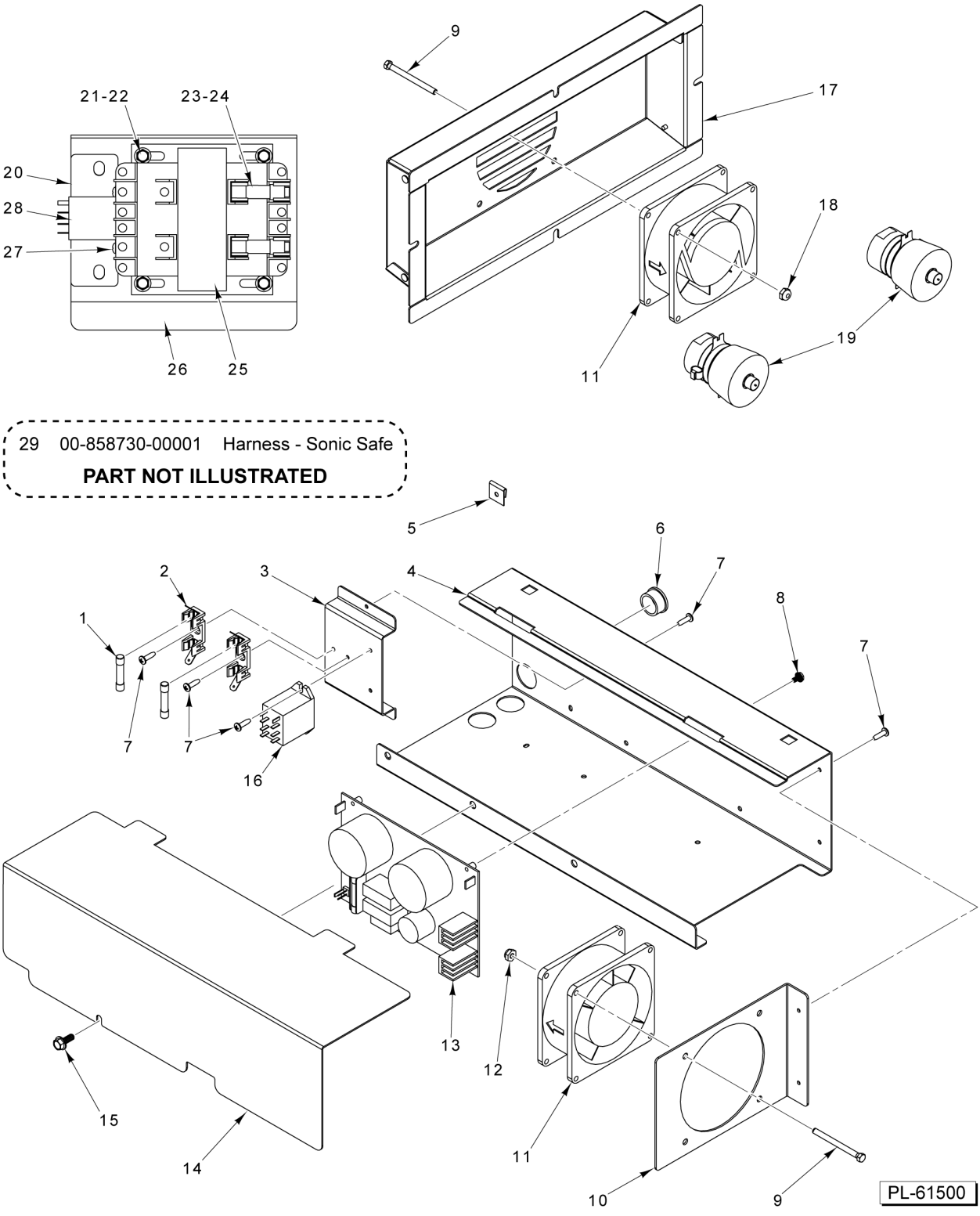

ELECTRICAL COMPONENTS
(SONIC SAFE)

ELECTRICAL COMPONENTS
(SONIC SAFE)

ILLUS. PL-61500	PART NO.	NAME OF PART	AMT.
1	FE-024-83	Fuse	2
2	00-856677-00001	Block - Fuse (20 Amp., 300 V.)	2
3	00-858576-00007	Bracket	1
4	00-858576-00003	Control Box	1
5	00-854766-00001	Nut - Speed 3 Type	3
6	FE-016-32	Bushing - Snap (Electrical)	1
7	SD-019-29	Self-Tapping Screw 6-20 x 1/2 Phil. Pan Hd., Type B	AR
8	SC-132-84	Screw - Hex Serrated 6/32 x 1/4	4
9	SC-132-80	Screw - Cap, Hex, 8-32 X 2	4
10	00-858576-00004	Fan - Mounting Bracket	1
11	00-858733-00001	Fan - Cooling	1
12	NS-047-98	Lock Nut 8-32 Hex	4
13	00-858576-00005	Circuit Board	1
14	00-858576-00006	Cover - Control Box	1
15	SC-132-38	Screw - Hex Serrated 10/24 x 1/2	1
16	00-416535-00007	Relay - Heating (200-240 V.)	1
17	00-858591-00001	Cover - Fan, Rear Panel	1
18	NS-047-98	Lock Nut 8-32 Hex	4
19	00-858459-00002	Transducer, Ultrasonic	2
20	00-858749-00003	Bracket - Relay (480V)	1
21	NS-038-13	Lock Nut 10-24 Hex	4
22	SC-132-38	Screw - Hex Serrated 10/24 x 1/2	4
23	00-858745-00001	Holder - Fuse	4
24	FE-026-97	Fuse (1.5 Amp.) (480 V.)	2
25	00-858740-00001	Transformer (480 V.) (50 VA)	1
26	00-858749-00002	Bracket - Transformer (480V)	1
27	SD-019-29	Self-Tapping Screw 6-20 x 1/2 Phil. Pan Hd., Type B (480V)	2
28	00-856699-00001	Switch - Relay (480V)	1
29	00-858730-00001	Harness - Wire (480V)	1

12	00-858056-00001	Harness - Contactor Wiring (Delta)
13	00-858056-00002	Harness - Contactor Wiring (WYE)

PARTS NOT ILLUSTRATED

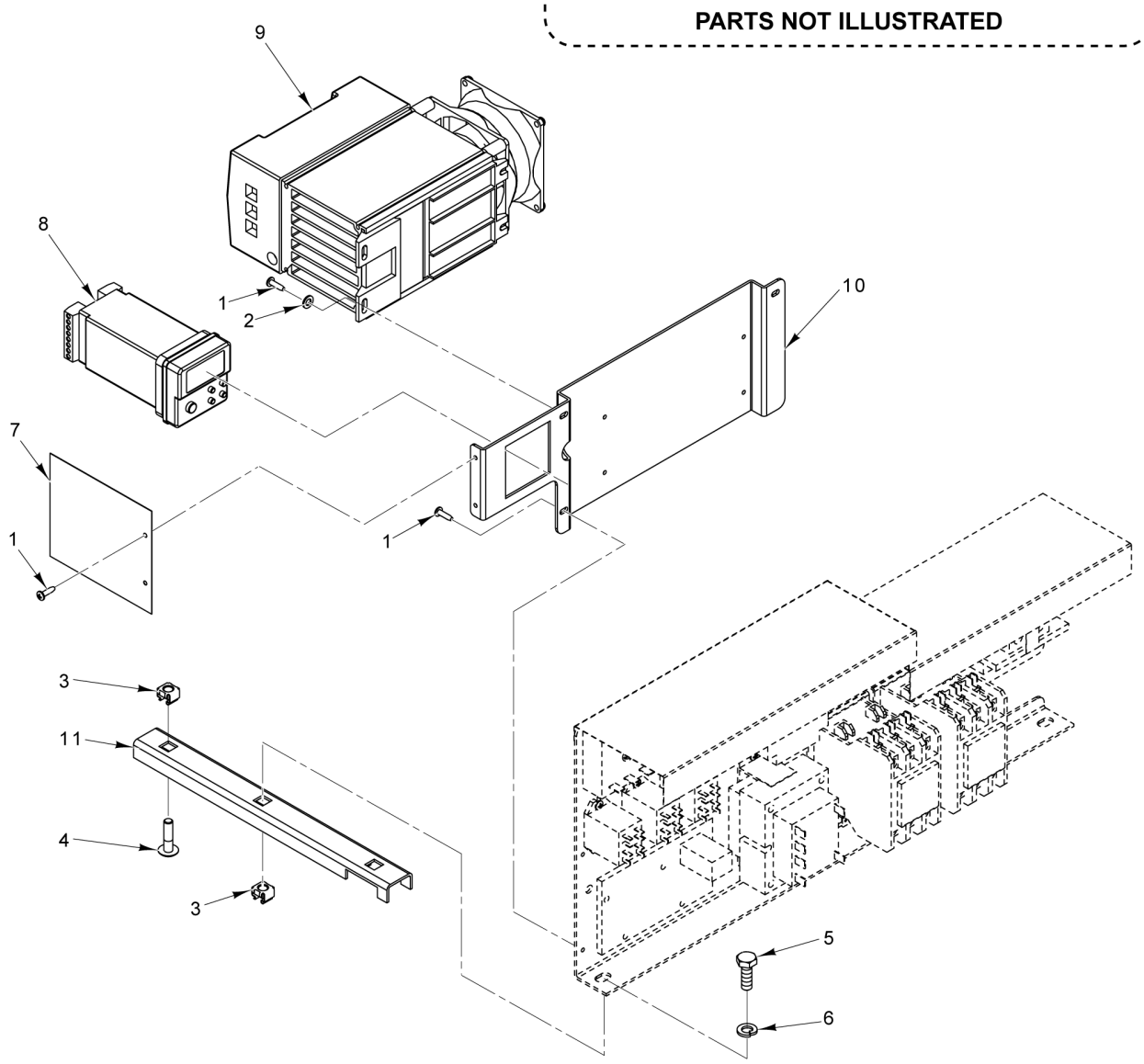

LINE CONTROLS (LWE)

LINE CONTROLS (LWE)

ILLUS. PL-60661	PART NO.	NAME OF PART	AMT.
1	SD-019-29	Self-Tapping Screw 6-20 x 1/2 Phil. Pan Hd., Type B	AR
2	WS-002-15	Washer	4
3	NS-049-03	Panel Nut 1/4-20	2
4	SC-115-70	Mach. Screw 1/4-20 x 1 Slotted Truss Hd. (SST)	1
5	SC-041-01	Cap Screw 1/4-20 x 3/4 Hex Hd. (SST)	1
6	WL-006-17	Lockwasher 1/4 Helical (SST)	1
7	00-858055-00001	Shield - Mylar (4 In.)	1
8	00-858053-00001	Controller - PM (EZ-ZONE)	1
9	00-858052-00001	Contactor	1
10	00-858079-00001	Bracket - Control Mounting	1
11	00-857713-00001	Frame Rail - Front	1
12	00-858056-00001	Harness - Wiring (Delta)	1
13	00-858056-00002	Harness - Wiring (WYE)	1

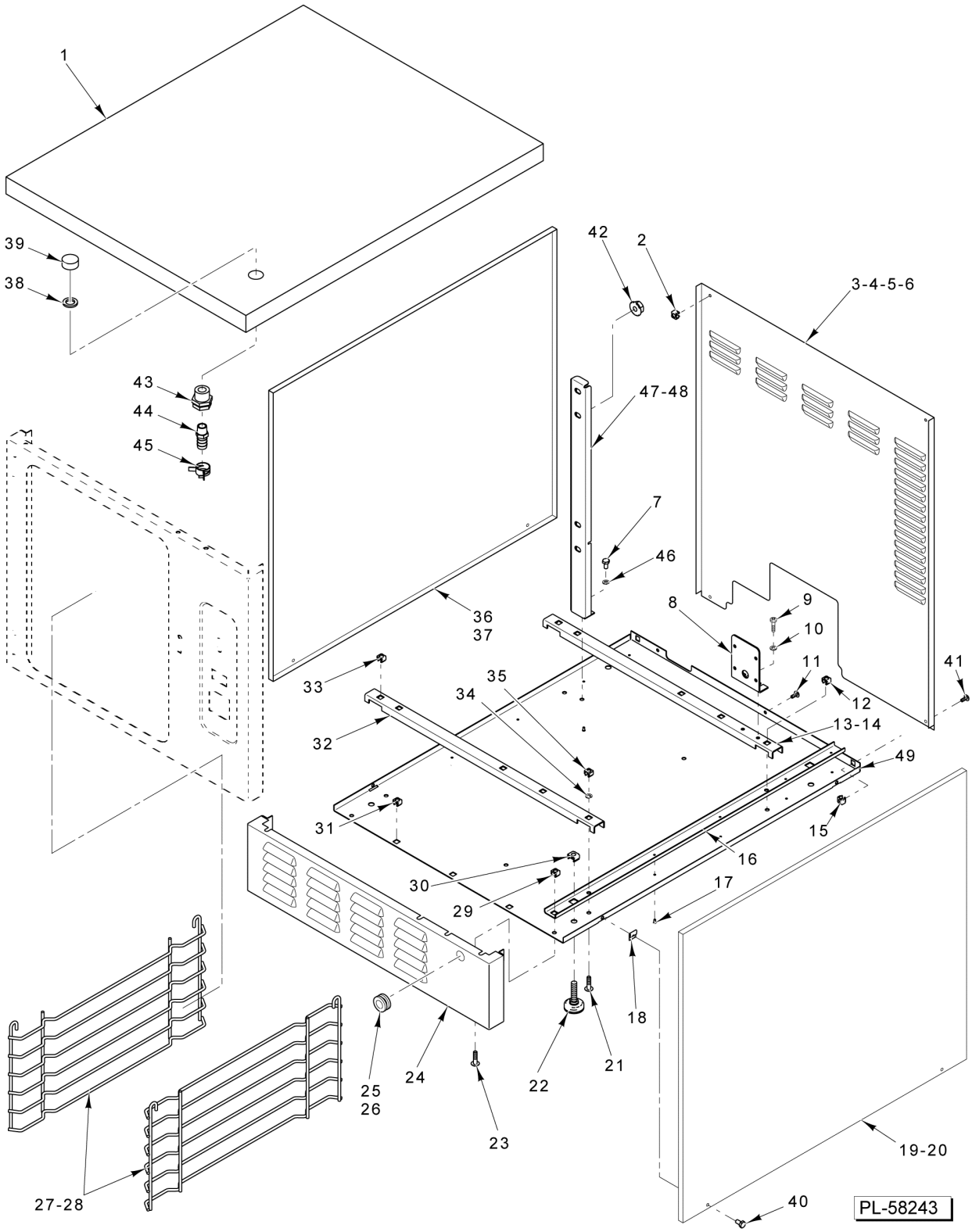
1
39
38
43
44
45
42
2
3-4-5-6
47-48
7
46
36
37
8
9
10
11
12
41
33
35
34
32
13-14
49
31
15
16
30
29
17
18
21
22
24
25
26
23
19-20
27-28
40
PL-58243

CABINET

CABINET

ILLUS. PL-58243	PART NO.	NAME OF PART	AMT.
1	00-855547-00002	Panel - Top	1
2	NS-049-01	Panel Nut 10-24	2
3	00-856733-00001	Back Panel - Cabinet (3-Pan) (Basic & Pro)	1
4	00-856733-00002	Back Panel - Cabinet (5-Pan) (Basic & Pro)	1
5	00-858132-00001	Back Panel - Cabinet (3-Pan) (LWE)	1
6	00-858131-00001	Back Panel - Cabinet (5-Pan) (LWE)	1
7	SC-041-50	Cap Screw 1/4-20 x 1/2 Hex Hd. (SST)	2
8	00-857020-00001	Bracket - High Limit Mounting	1
9	SD-019-29	Self-Tapping Screw 6-20 x 1/2 Phil. Pan Hd., Type B	2
10	WS-002-45	Washer	2
11	SC-066-06	Mach. Screw 10-24 x 1/2 Phil. Truss Hd. (SST)	AR
12	NS-049-03	Panel Nut 1/4-20	1
13	00-856740-00001	Cross Channel - Base (Cabinet) (Basic & Pro)	1
14	00-857566-00001	Cross Channel - Base (Cabinet) (LWE)	1
15	NS-049-01	Panel Nut 10-24	2
16	00-856739-00001	Channel - Cabinet Base	2
17	RS-030-08	Rivet - Dome 1/8 In	8
18	00-854766-00001	Nut - Speed 3 Type	4
19	00-856731-00001	Side Panel - Cabinet (3-Pan)	1
20	00-856731-00002	Side Panel - Cabinet (5-Pan)	1
21	SC-115-70	Mach. Screw 1/4-20 x 1 Slotted Truss Hd. (SST)	4
22	00-856760-00001	Leg - Leveling (Counter Top)	4
23	SC-120-12	Mach. Screw 1/4-20 x 5/8 Phil. Truss Hd	2
24	00-855314-00001	Apron - Cabinet	1
25	FE-025-79	Bushing - Snap (Electric) (Basic)	1
26	PB-004-38	Plug - Button (3/4) (Pro & LWE)	1
27	00-855355-00001	Rack - Wire (3-Pan)	2
28	00-855355-00002	Rack - Wire (5-Pan)	2
29	NS-049-03	Panel Nut 1/4-20	1
30	NS-049-02	Panel Nut 3/8-16	2
31	NS-049-01	Panel Nut 10-24	5
32	00-856740-00001	Cross Channel - Base (Cabinet) (Pro & Basic Only)	1
33	NS-049-03	Panel Nut 1/4-20	4
34	WL-006-17	Lockwasher 1/4 Helical (SST)	5
35	NS-049-02	Panel Nut 3/8-16	1
36	00-856731-00001	Side Panel - Cabinet (3-Pan)	1
37	00-856731-00002	Side Panel - Cabinet (5-Pan)	1
38	00-856769-00001	O-Ring 1/8 In. Thk	1
39	FP-090-60	Fitting - Hose (Round Hose Cap 3/4 NH Thread) (Brass) (Delime)	AR
40	SC-093-27	Mach. Screw 10-24 x 7/8 Phil. Truss Hd. (SST)	4
41	SC-066-06	Mach. Screw 10-24 x 1/2 Phil. Truss Hd. (SST)	2
42	NS-038-04	Lock Nut 1/4-20 Flange	4
43	FP-090-37	Fitting - Hose - Anchor Coupling 3/8 NPT (Brass)	1
44	FP-090-63	Fitting - Hose 5/8 ID Hose to 3/8 MPT (Brass)	1
45	00-557845	Clamp - Hose (24mm)	1
46	WL-006-17	Lockwasher 1/4 Helical (SST)	2
47	00-856747-00001	Support Channel - Cabinet (3-Pan)	1
48	00-856747-00002	Support Channel - Cabinet (5-Pan)	1
49	00-856726-00001	Panel - Cabinet Base	5

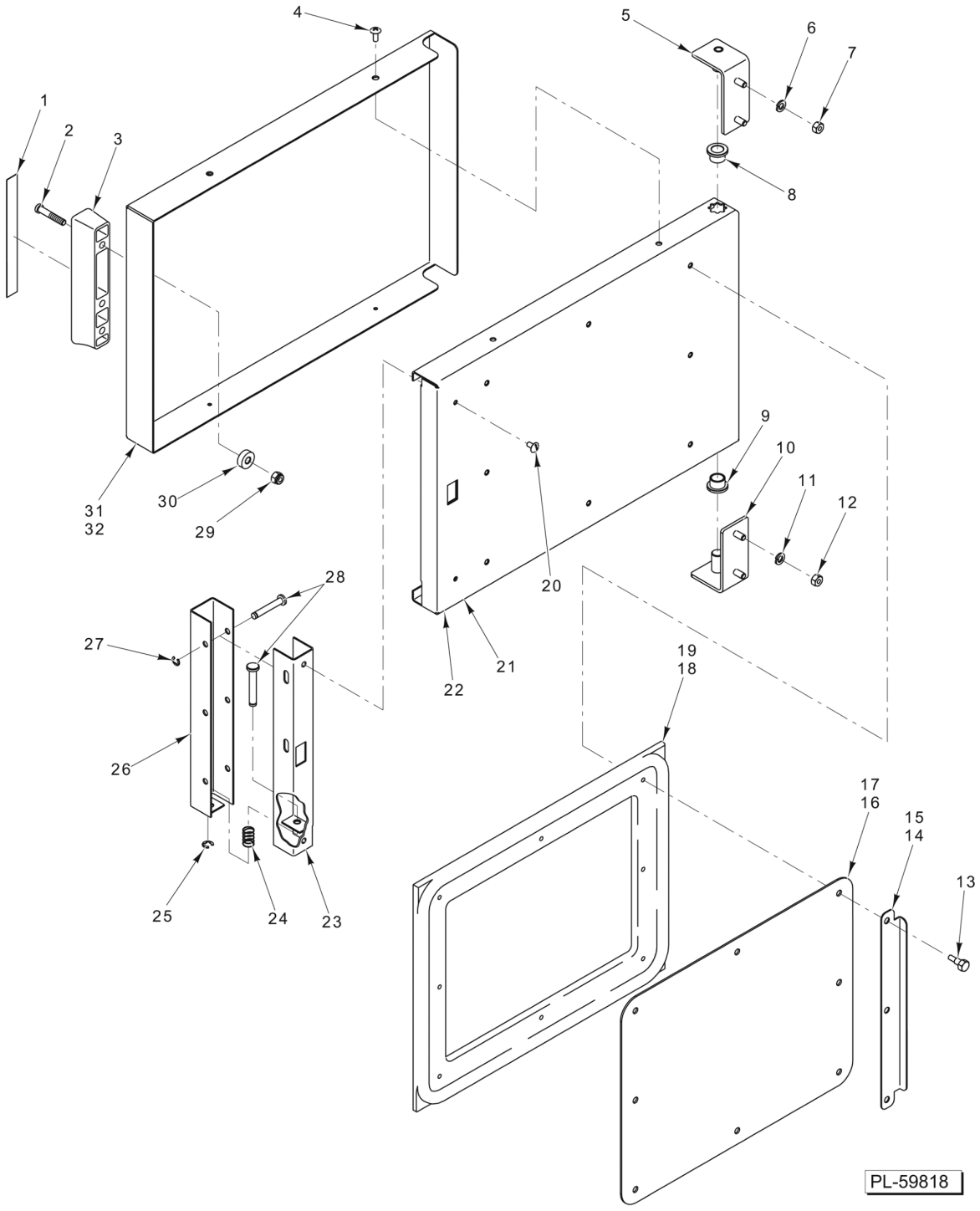
1
2
3
4
5
6
7
8
9
10
11
12
20
21
22
19
18
17
16
15
14
13
31
32
30
29
28
27
26
25
24
23
PL-59818

DOOR

DOOR

ILLUS. PL-59818	PART NO.	NAME OF PART	AMT.
1	00-855288-00001	Face Plate - Door Handle	1
2	SC-120-70	Cap Screw 1/4-20 x 1-5/8 Hex Socket Hd	2
3	00-855287-00001	Handle - Door	1
4	SC-066-20	Mach. Screw 10-32 x 1/2 Phil. Truss Hd. (SST)	4
5	00-855521-00001	Hinge Assy. - Door (Top)	1
6	WL-006-17	Lockwasher 1/4 Helical (SST)	2
7	NS-046-38	Nut 1/4-20 Hex (SST)	2
8	00-817643	Bearing - Flanged	1
9	00-817643	Bearing - Flanged	1
10	00-855521-00002	Hinge Assy. - Door (Bottom)	1
11	WL-006-17	Lockwasher 1/4 Helical (SST)	2
12	NS-046-38	Nut 1/4-20 Hex (SST)	2
13	00-857791-00001	Bolt - Rack Hanger	8
14	00-855714-00001	Gasket - Door Guard (3-Pan)	1
15	00-855714-00002	Gasket - Door Guard (5-Pan)	1
16	00-855285-00001	Gasket Retainer - Door (3-Pan)	1
17	00-855285-00002	Gasket Retainer - Door (5-Pan)	1
18	00-857085-00001	Kit - Door Gasket (3 Pan)	1
19	00-857085-00002	Kit - Door Gasket (5 Pan)	1
20	SC-053-05	Mach. Screw 10-24 x 3/8 Slotted Truss Hd. (SST)	2
21	00-855582-00001	Bracket Weldment - Door (3-Pan)	1
22	00-855582-00002	Bracket Weldment - Door (5-Pan)	1
23	00-855584-00001	Door Latch - Bracket	1
24	00-855298-00001	Latch Spring - Door	1
25	RR-006-22	Retaining Ring 1/4 In. (SST)	1
26	00-855585-00001	Latch Actuator - Door	1
27	RR-006-22	Retaining Ring 1/4 In. (SST)	3
28	00-855590- 00002	Pin - Clevis 1.525 In. Lg	4
29	NS-048-63	Lock Nut 1/4-20 Hex (SST)	2
30	00-855290-00001	Bearing - Door Handle	2
31	00-855582-00001	Bracket Weldment - Door (3-Pan)	1
32	00-855582-00002	Bracket Weldment - Door (5-Pan)	1

27 00-557760 Shim (SST)
28 00-557761 Shim (SST)

PARTS NOT ILLUSTRATED

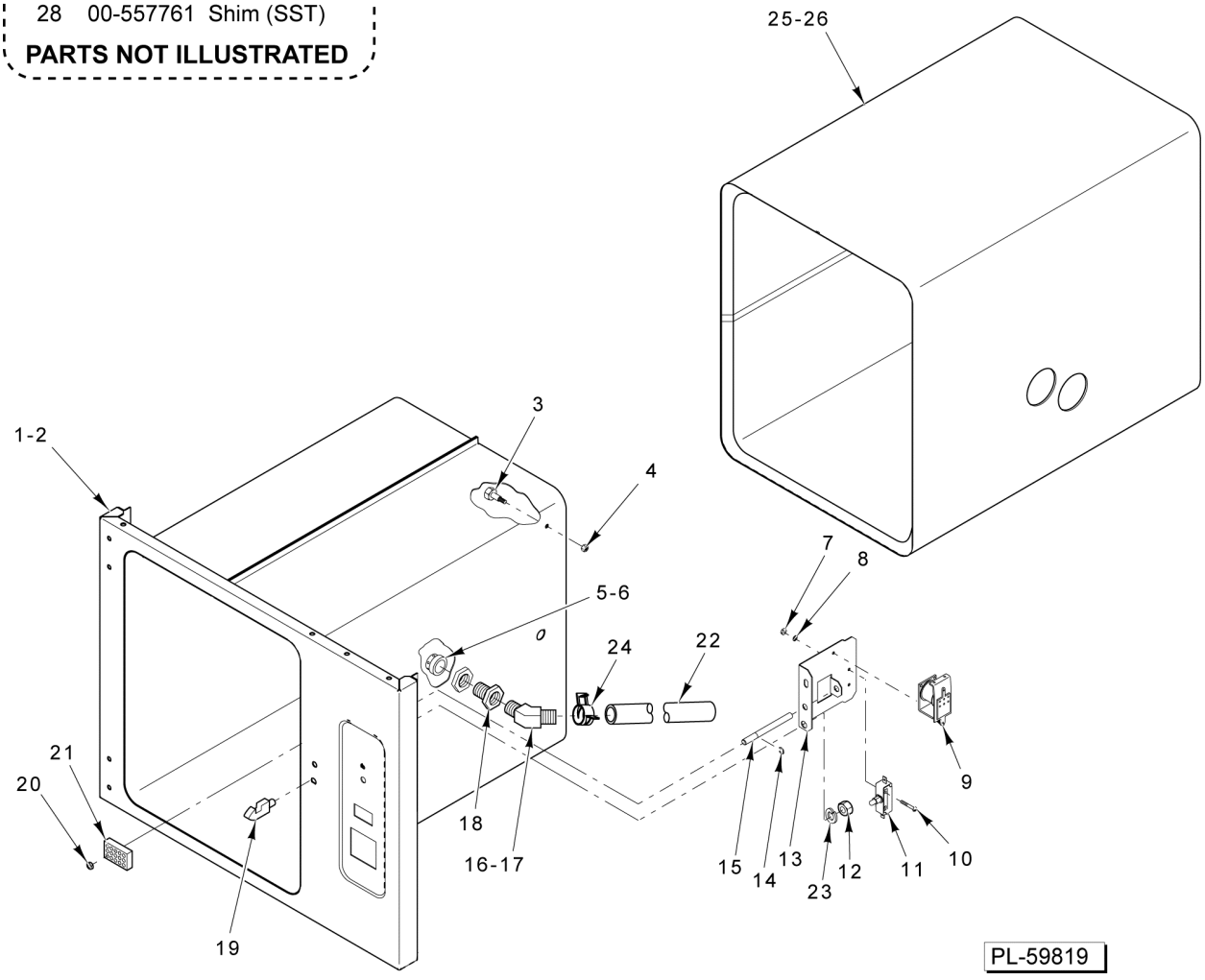

COMPARTMENT

COMPARTMENT

ILLUS. PL-59819	PART NO.	NAME OF PART	AMT.
1	00-857646-00004	Compartment - Service Kit (3-Pan)	1
2	00-857649-00004	Compartment - Service Kit (5-Pan)	1
3	00-857791-00001	Bolt - Rack Hanger	4
4	NS-049-09	Nut Assy. 10-32 (SST)	4
5	00-856753-00001	Steam Port - Compartment (5-Pan)	1
6	00-856742-00001	Steam Port - Compartment (3-Pan)	1
7	NS-011-07	Nut 6-32 Hex (SST)	2
8	WL-014-03	Lockwasher #6 External (SST)	2
9	00-411499-00004	Buzzer (115 V.)	1
10	SC-021-12	Mach. Screw 6-32 x 1 Slotted Rd. Hd. (SST)	1
11	00-842049	Switch - Door	1
12	NS-015-13	Nut 3/8-16 Hex (SST)	1
13	00-855308-00001	Actuator Bracket - Door	1
14	RR-011-26	Ring - Retaining	2
15	00-855307-00001	Actuator Rod - Door	1
16	FP-090-18	Elbow Pipe 5/8 x 45 Deg. (Brass) (Used with Blue Hose)	1
17	FP-091-09	Fitting - Hose 3/4 Hose to 1/2 MPT (Brass) (Used with White Hose)	1
18	00-855394-00001	Adapter - Cabinet Steam Port	1
19	00-855586-00001	Bullet - Door	1
20	NS-011-18	Nut 10-24 Hex (SST)	1
21	00-855753-00001	Cover - Drain	1
22	00-913135-00042	White Steam Line Hose (42 in long)	1
23	WL-006-27	Lockwasher 3/8 Helical (SST)	1
24	00-557846	Clamp - Hose (29mm)	1
25	00-855779-00001	Compartment - Insulation (3-Pan)	1
26	00-855779-00002	Compartment - Insulation (5-Pan)	1
27	00-557760	Shim (0.005 Thk.) (SST)	AR
28	00-557761	Shim (0.010 Thk.) (SST)	AR

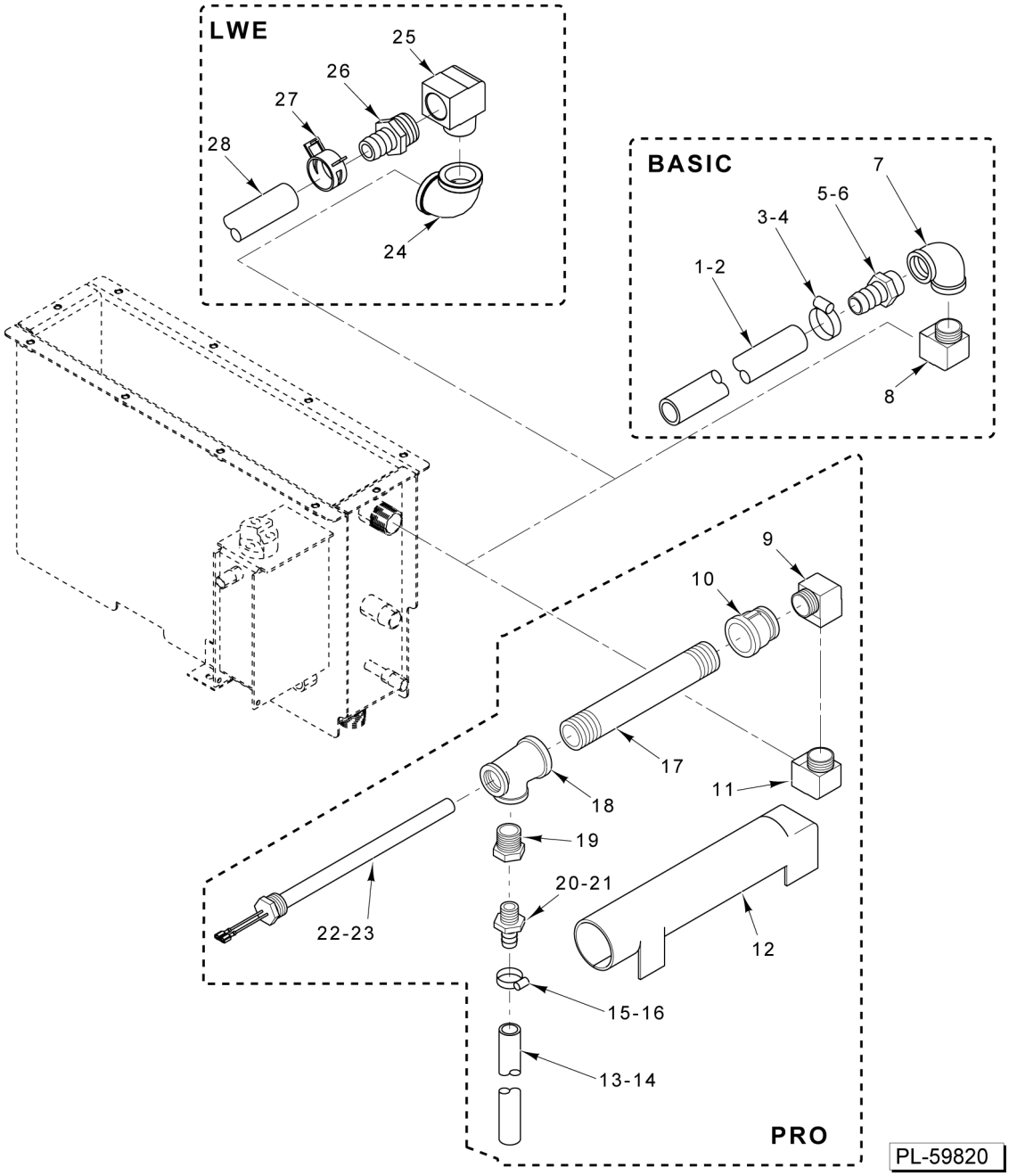

GENERATOR MANIFOLD (3-PAN)

GENERATOR MANIFOLD (3-PAN)

ILLUS. PL-59820	PART NO.	NAME OF PART	AMT.
1	00-557475	Hose 5/8 ID x 0.955 OD (1.66 Ft.) (Blue) (Basic)	1
2	00-913135-00042	White Steam Line Hose (42 in long) (Basic)	1
3	00-557718	Clamp - Hose #10 (For Blue Hose) (Basic)	1
4	00-557846	Clamp - Hose (29mm) (For White Hose) (Basic)	1
5	FP-090-31	Fitting - Hose 5/8 Hose to 3/4 MPT (Brass) (For Blue Hose) (Basic)	1
6	FP-091-08	Fitting - Pipe 3/4 Hose to 3/4 MPT (Brass) (For White Hose) (Basic)	1
7	FP-015-23	Elbow 3/4 x 90 Deg. (Brass) (Basic)	1
8	FP-090-70	Elbow 3/4 Pipe 90 Deg. (Brass) (Basic)	1
9	FP-090-70	Elbow 3/4 Pipe 90 Deg. (Brass) (Pro)	1
10	FP-083-99	Coupling - Reducing 1 to 3/4 (Brass) (Pro)	1
11	FP-090-70	Elbow 3/4 Pipe 90 Deg. (Brass) (Pro)	1
12	00-856774-00001	Insulation - Super Heater (Pro)	1
13	00-557475	Hose 5/8 ID x 0.955 OD (1.66 Ft.) (Blue) (Pro)	1
14	00-913135-00042	White Steam Line Hose (42 in long) (Pro)	1
15	00-557718	Clamp - Hose #10 (For Blue Hose) (Pro)	1
16	00-557846	Clamp - Hose (29mm) (For White Hose) (Pro)	1
17	FP-090-49	Pipe 1 x 8 (Brass) (Pro)	1
18	FP-019-40	Tee - Pipe 1 x 3/4 x 3/4 (Brass) (Pro)	AR
19	FP-027-22	Bushing - Pipe 3/4 to 1/2 (Brass) (For White Hose) (Pro)	1
20	FP-090-31	Fitting - Hose 5/8 Hose to 3/4 MPT (Brass) (For Blue Hose) (Pro)	1
21	FP-091-09	Fitting - Hose 3/4 Hose to 1/2 MPT (Brass) (For White Hose) (Pro)	1
22	00-856709-00001	Heater - Super Heater (208/240 V.) (Pro)	1
23	00-856709-00002	Heater - Super Heater (480 V.) (Pro)	1
24	FP-015-23	Elbow 3/4 x 90 Deg. (Brass) (LWE)	1
25	FP-090-70	Elbow 3/4 Pipe 90 Deg. (Brass) (LWE)	1
26	FP-091-08	Fitting - Pipe 3/4 Hose to 3/4 MPT (Brass) (LWE)	1
27	00-557846	Clamp - Hose (29mm) (LWE)	1
28	00-557475	Hose 5/8 ID x 0.955 OD (1.66 Ft.) (Blue) (LWE)	1

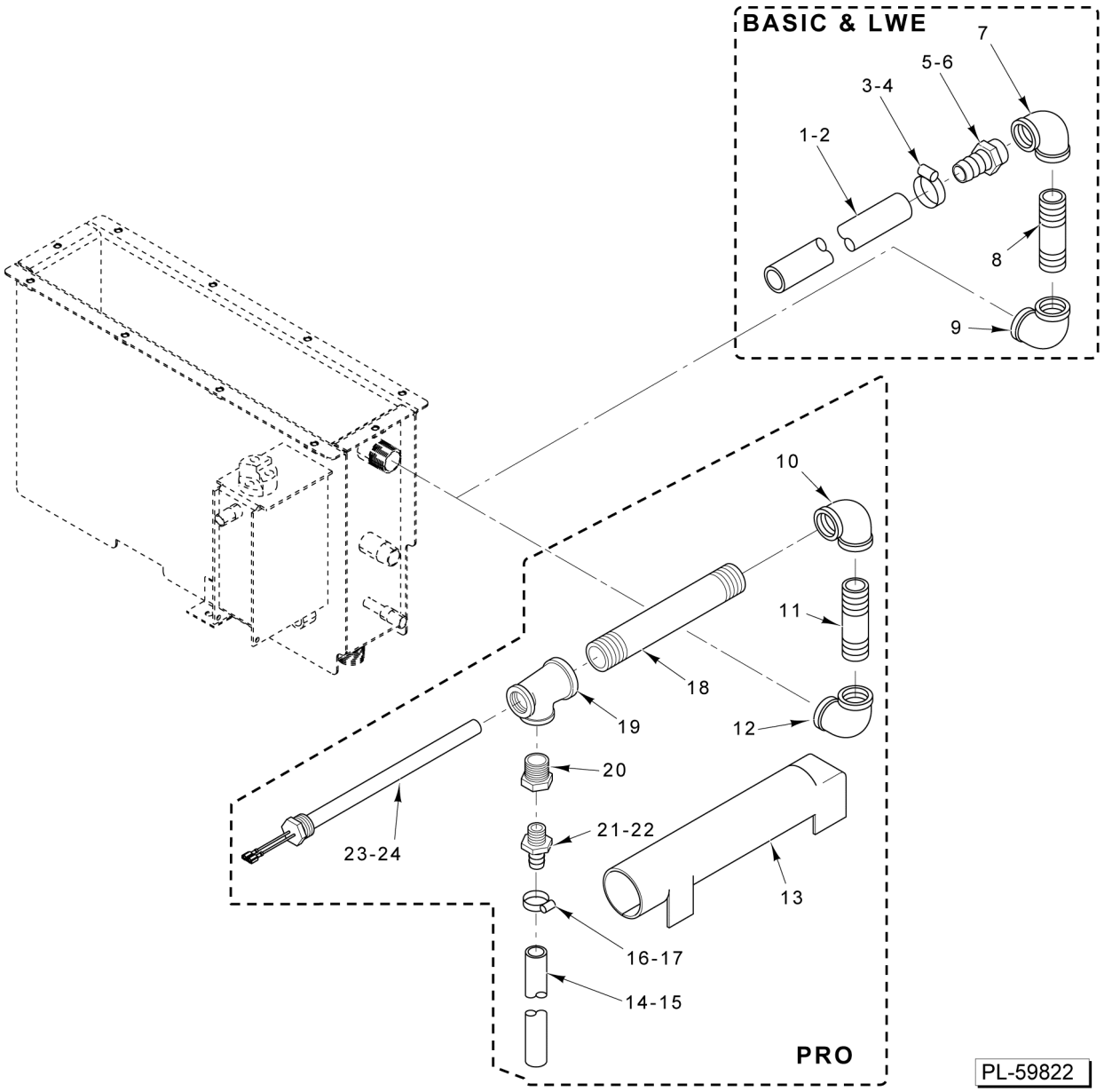

GENERATOR MANIFOLD (5-PAN)

GENERATOR MANIFOLD (5-PAN)

ILLUS. PL-59822	PART NO.	NAME OF PART	AMT.
1	00-557475	Hose 5/8 ID x 0.955 OD (1.66 Ft.) (Blue) (Basic)	1
2	00-913135-00042	White Steam Line Hose (42 in long) (Basic & LWE)	1
3	00-557718	Clamp - Hose #10 (For Blue Hose) (Basic)	1
4	00-557846	Clamp - Hose (29mm) (For White Hose) (Basic & LWE)	1
5	FP-090-31	Fitting - Hose 5/8 Hose to 3/4 MPT (Brass) (For Blue Hose) (Basic)	1
6	FP-091-08	Fitting - Pipe 3/4 Hose to 3/4 MPT (Brass) (For White Hose) (Basic & LWE)	1
7	FP-015-23	Elbow 3/4 x 90 Deg. (Brass) (Basic & LWE)	1
8	FP-041-66	Pipe 3/4 x 3 TBE (Brass) (Basic & LWE)	1
9	FP-015-23	Elbow 3/4 x 90 Deg. (Brass) (Basic & LWE)	1
10	FP-015-23	Elbow 3/4 x 90 Deg. (Brass) (Pro)	1
11	FP-041-66	Pipe 3/4 x 3 TBE (Brass) (Pro)	1
12	FP-015-23	Elbow 3/4 x 90 Deg. (Brass) (Pro)	1
13	00-856774-00001	Insulation - Super Heater (Pro)	1
14	00-557475	Hose 5/8 ID x 0.955 OD (1.66 Ft.) (Blue) (Pro)	1
15	00-913135-00042	White Steam Line Hose (42 in long) (Pro)	1
16	00-557718	Clamp - Hose #10 (For Blue Hose) (Pro)	1
17	00-557846	Clamp - Hose (29mm) (For White Hose) (Pro)	1
18	FP-090-49	Pipe 1 x 8 (Brass) (Pro)	1
19	FP-019-40	Tee - Pipe 1 x 3/4 x 3/4 (Brass) (Pro)	AR
20	FP-027-22	Bushing - Pipe 3/4 to 1/2 (Brass) (For White Hose) (Pro)	1
21	FP-090-31	Fitting - Hose 5/8 Hose to 3/4 MPT (Brass) (For Blue Hose) (Pro)	1
22	FP-091-09	Fitting - Hose 3/4 Hose to 1/2 MPT (Brass) (For White Hose) (Pro)	1
23	00-856709-00001	Heater - Super Heater (208/240 V.) (Pro)	1
24	00-856709-00002	Heater - Super Heater (480 V.) (Pro)	1

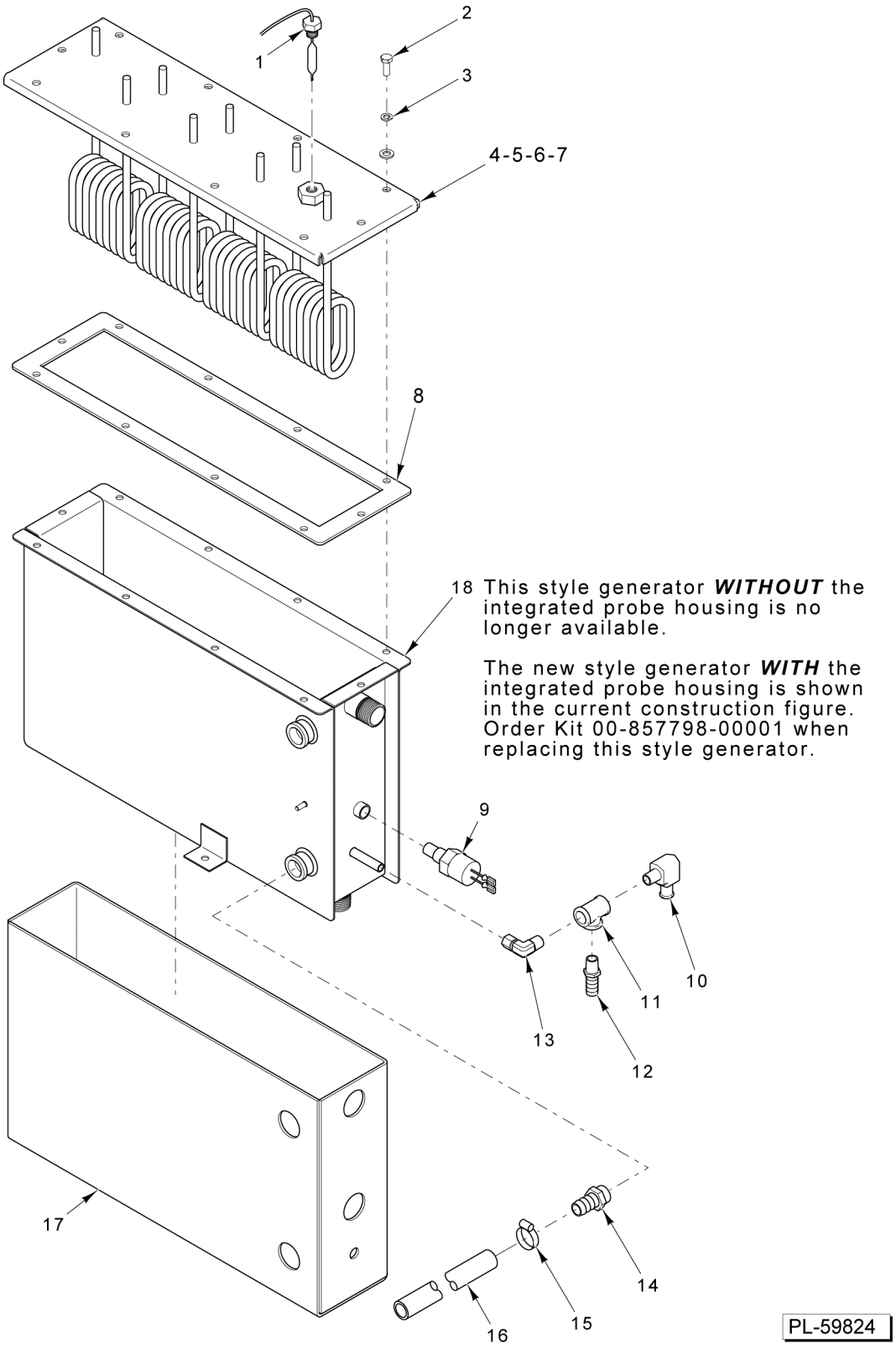

GENERATOR ASSEMBLY
(BEFORE S/N 463003747)

GENERATOR ASSEMBLY
(BEFORE S/N 463003747)

ILLUS. PL-59824	PART NO.	NAME OF PART	AMT.
1	00-913102-00404	Kit - High Limit Probe (Includes Clip)	1
2	SC-041-01	Cap Screw 1/4-20 x 3/4 Hex Hd. (SST)	10
3	WL-006-17	Lockwasher 1/4 Helical (SST)	10
4	00-858460-00001	Element - Heating (208/240 V., 15 kW)	1
5	00-858460-00002	Element - Heating (208/240 V., 8.5 kW)	1
6	00-858460-00003	Element - Heating (277 V., 15 kW)	1
7	00-858460-00004	Element - Heating (277 V., 8.5 kW)	1
8	00-858473-00001	Gasket - Generator	1
9	00-856768-00001	Probe - Hold Temperature	1
10	FP-090-91	Fitting - Hose 1/2 Hose to 1/4 NPT (Brass)	1
11	FP-019-08	Tee - Pipe 1/4 x 1/4 x 1/4 (Brass)	1
12	FP-090-59	Fitting - Hose 1/2 ID x 1/4 NPT (Brass)	1
13	FP-012-11	Fitting - Tube 3/8 TBG x 1/4 MPT (Brass)	1
14	FP-087-39	Fitting - Hose 5/8 Hose to 1/2 NPT (Brass)	1
15	00-534177	Clamp - Hose #12	1
16	00-557477	Hose 1 ID x 1.133 OD (0.93 Ft.) (Green)	1
17	00-856757-00001	Insulation - Generator	1
18	00-857798-00001	Kit - Replacement EA Generator	1
*19	00-858202-00001	Generator Without Transducer Studs	1
*20	00-858202-00002	Generator With Transducer Studs	1

* Not Shown in Art

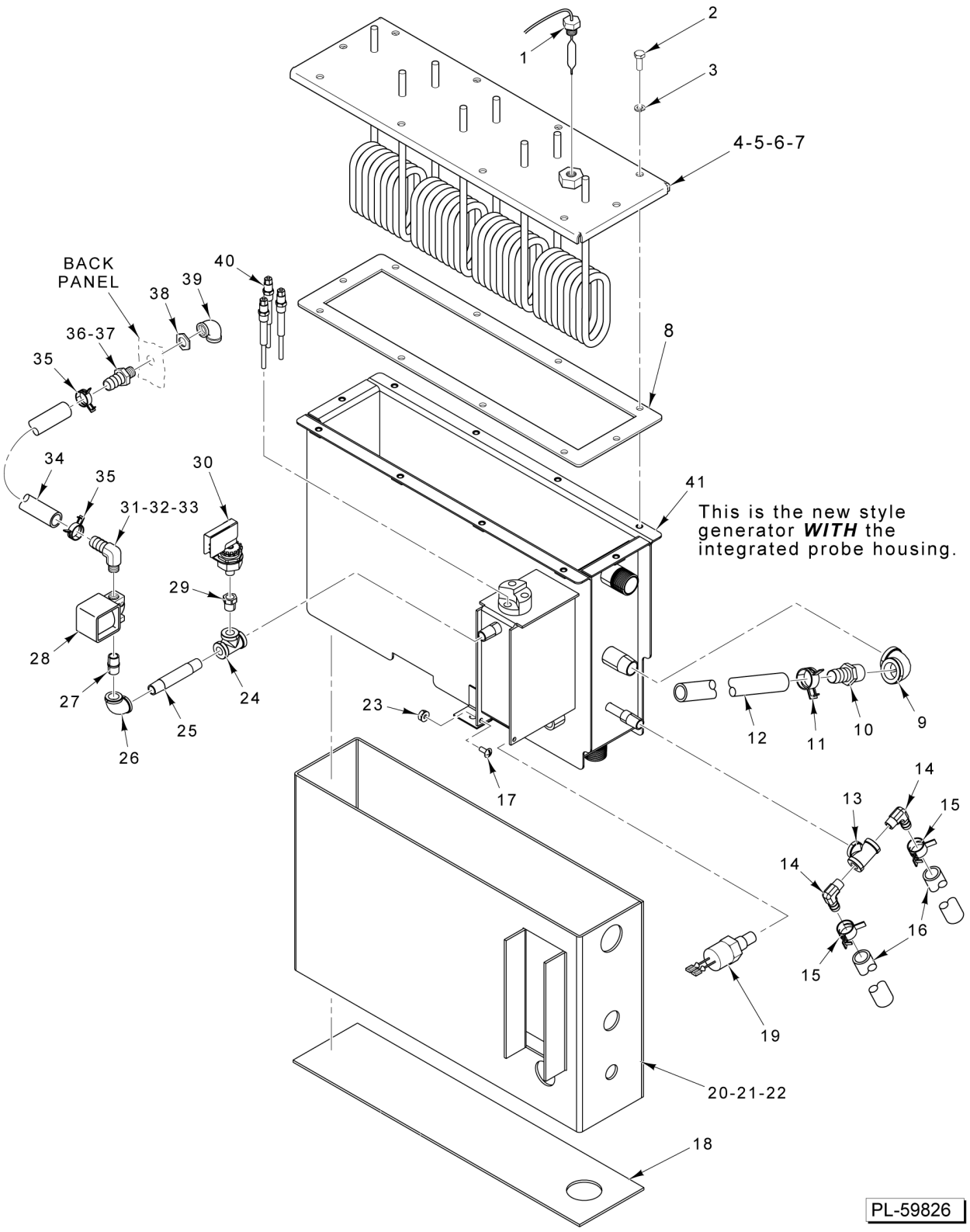

GENERATOR ASSEMBLY
(S/N 463003747 THRU S/N 463023094)

GENERATOR ASSEMBLY
(S/N 463003747 THRU S/N 463023094)

ILLUS. PL-59826	PART NO.	NAME OF PART	AMT.
1	00-913102-00404	Kit - High Limit Probe (Includes Clip)	1
2	SC-041-50	Cap Screw 1/4-20 x 1/2 Hex Hd. (SST)	10
3	WL-006-17	Lockwasher 1/4 Helical (SST)	10
4	00-858460-00001	Element - Heating (208/240 V., 15 kW)	1
5	00-858460-00002	Element - Heating (208/240 V., 8.5 kW)	1
6	00-858460-00003	Element - Heating (277 V., 15 kW)	1
7	00-858460-00004	Element - Heating (277 V., 8.5 kW)	1
8	00-858473-00001	Gasket - Generator	1
9	FP-015-16	Elbow - Pipe 1/2 x 90 Deg. (Brass)	1
10	FP-087-39	Fitting - Hose 5/8 Hose to 1/2 NPT (Brass)	1
11	00-557845	Clamp - Hose (24mm)	2
12	00-557475	Hose 5/8 ID x 0.955 OD (1.66 Ft.) (Blue)	1
13	FP-019-08	Tee - Pipe (Brass)	1
14	FP-090-91	Fitting - Hose 1/2 Hose to 1/4 NPT (Brass)	2
15	00-557844	Clamp - Hose (19mm)	4
16	00-557681	Hose - Condensate Box Line (14 In.)	2
17	SC-066-06	Mach. Screw 10-24 x 1/2 Phil. Truss Hd. (SST)	1
18	00-857755-00001	Insulation - Generator (Bottom)	1
19	00-856768-00001	Probe - Hold Temperature	1
20	00-856757-00001	Insulation - Generator (Pro & Basic)	1
21	00-857757-00001	Insulation - Generator (LWE)	AR
22	00-557598	Tape - Aluminum Foil (Use with Insulation)	AR
23	NS-044-09	Nut Assy. 10-24 Hex KEPS	1
24	FP-019-08	Tee - Pipe (Brass)	1
25	FP-075-70	Pipe 1/4 x 3 TBE (Brass)	1
26	FP-015-05	Elbow - Pipe 1/4 x 90 Deg. (Brass)	1
27	FP-040-08	Pipe 1/4 x 7/8 TBE (Brass)	1
28	00-857021-00001	Valve - Solenoid 1/4 NPT (9/32 Orifice)	1
29	FP-027-02	Bushing - Pipe 1/4 to 1/8	1
30	00-854471	Switch - Pressure (5 PSI)	1
31	FP-090-91	Fitting - Hose 1/2 Hose to 1/4 NPT (Brass) (3-Pan)	1
32	FP-090-59	Fitting - Hose 1/2 ID x 1/4 NPT (Brass) (5-Pan) (Not Shown)	1
33	FP-090-91	Fitting - Hose 1/2 Hose to 1/4 NPT (Brass) (LWE)	1
34	00-557474	Hose 1/2 ID x 0.830 OD (3 Ft.)	1
35	00-557970	Clamp - Hose (20mm)	2
36	FP-090-59	Fitting - Hose 1/2 ID x 1/4 NPT (Brass) (Pro, Basic, & LWE 5-Pan)	1
37	FP-090-91	Fitting - Hose 1/2 Hose to 1/4 NPT (Brass) (LWE 3-Pan)	1
38	FP-030-14	Lock Nut - Pipe 1/4 NPSL (Brass)	1
39	FP-078-85	Elbow - Pipe 1/4 x 90 Deg. (LWE)	1
40	00-857046-00002	Probe - Water Level	3
41	00-857798-00001	Kit - Replacement EA Generator (Incls. Items 9, 10, 11, 13, 14, 15, 17, 18, 20 thru 30, & 40)	1

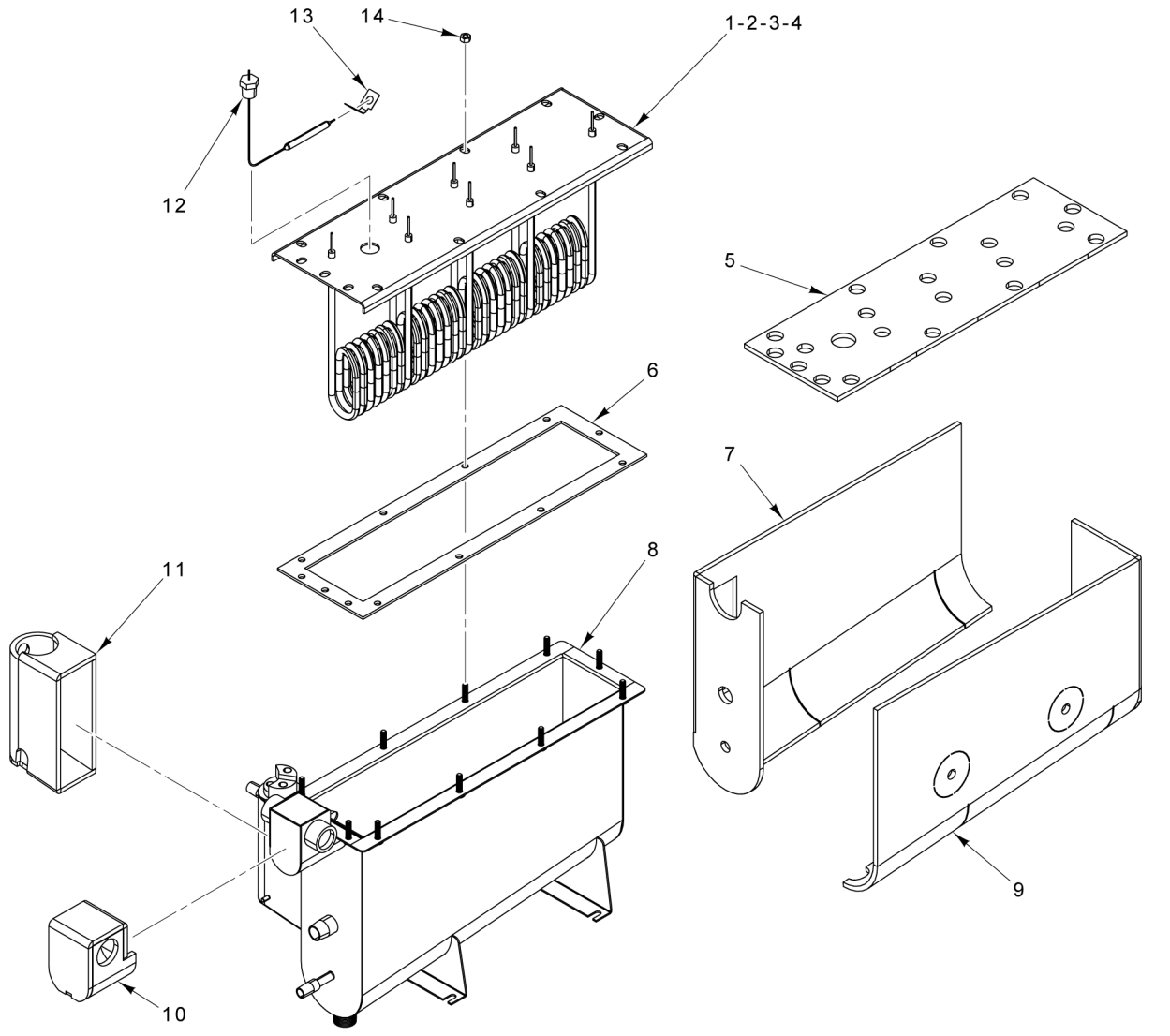

GENERATOR ASSEMBLY
(STARTING S/N 463023094)

GENERATOR ASSEMBLY
(STARTING S/N 463023094)

ILLUS. PL-61513	PART NO.	NAME OF PART	AMT.
1	00-858460-00001	Element - Heating (208/240 V., 15 kW)	1
2	00-858460-00002	Element - Heating (208/240 V., 8.5 kW)	1
3	00-858460-00003	Element - Heating (277 V., 15 kW)	1
4	00-858460-00004	Element - Heating (277 V., 8.5 kW)	1
5	00-858483-00001	Insulation - Generator (Top)	1
6	00-858473-00001	Gasket - Generator	1
7	00-858391-00001	Insulation	1
8	00-858202-00002	Generator	1
9	00-858391-00002	Insulation	1
10	00-858391-00004	Insulation	1
11	00-858391-00003	Insulation	1
12	00-913102-00404	Kit - High Limit Probe (Includes Clip)	1
13	00-858017-00001	Bracket - Mounting (Bulb)	1
14	NS-014-01	Nut 1/4-20 Hex (Brass)	AR

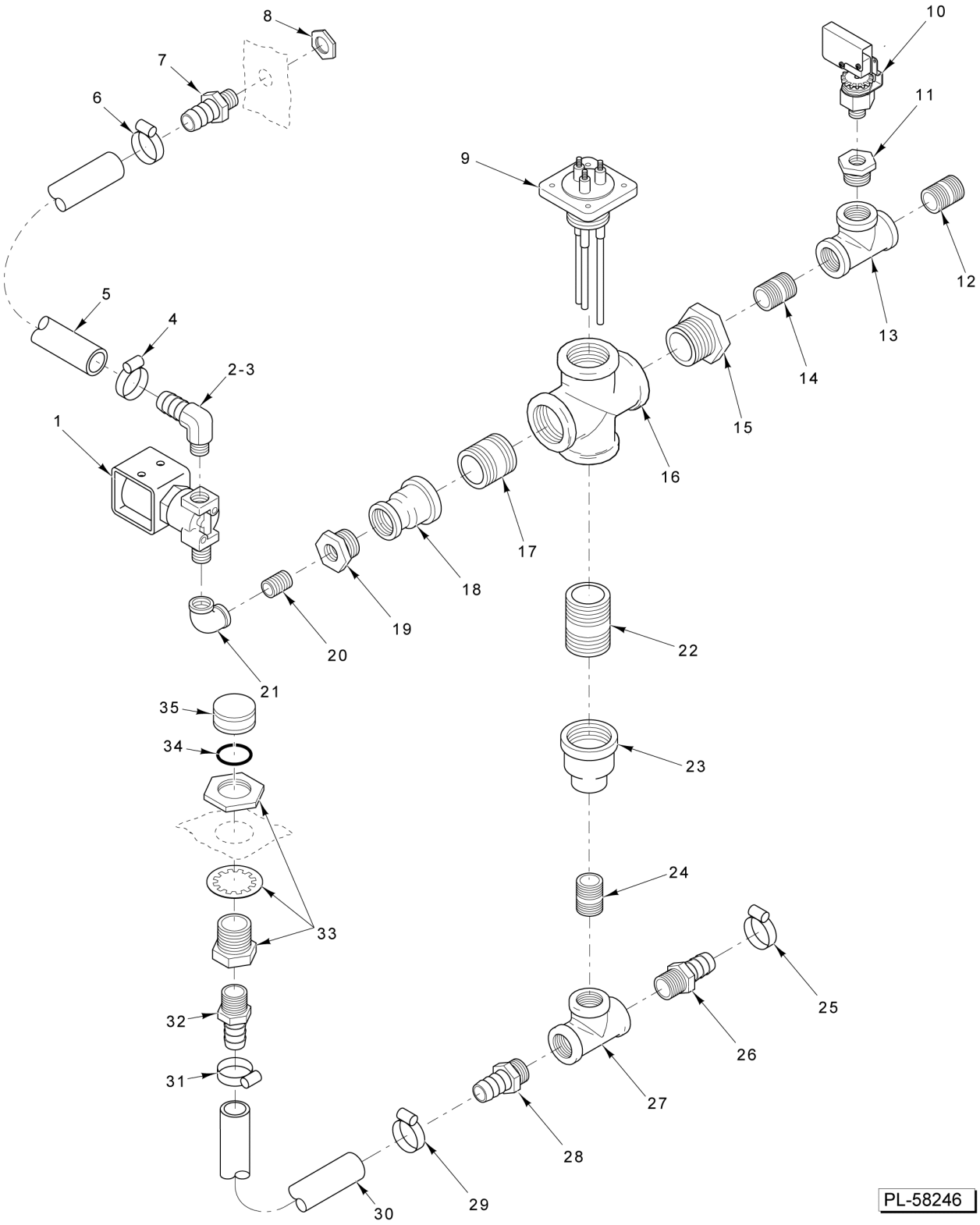

WATER LEVEL PROBE
(BEFORE S/N 463003747)

WATER LEVEL PROBE
(BEFORE S/N 463003747)

ILLUS. PL-58246	PART NO.	NAME OF PART	AMT.
1	00-857021-00001	Valve - Solenoid 1/4 NPT (9/32 Orifice)	1
2	FP-090-91	Fitting - Hose 1/2 Hose to 1/4 NPT (Brass) (3-Pan)	1
3	FP-090-59	Fitting - Hose 1/2 ID x 1/4 NPT (Brass) (5-Pan)	1
4	00-557718	Clamp - Hose #10	1
5	00-557474	Hose 1/2 ID x 0.830 OD (3 Ft.)	1
6	00-557718	Clamp - Hose #10	1
7	FP-090-59	Fitting - Hose 1/2 ID x 1/4 NPT (Brass)	1
8	FP-030-14	Lock Nut - Pipe 1/4 NPSL (Brass)	1
9	00-850736-00003	Probe - Level Control	1
10	00-857022-00001	Switch - Pressure	1
11	FP-027-06	Bushing - Pipe 1/2 To 1/8 (Brass)	1
12	FP-035-91	Pipe 1/2 x 1-1/8 TBE	1
13	FP-019-25	Tee 1/2 x 1/2 x 1/2	1
14	FP-035-91	Pipe 1/2 x 1-1/8 TBE	1
15	FP-026-24	Bushing - Pipe 1 to 1/2	1
16	FP-088-56	Cross - Pipe Std. 1 x 1 x 1 x 1 Std	1
17	FP-036-17	Pipe 1 x 1-1/2 TBE	1
18	FP-024-14	Coupling - Reducing 1 to 3/4	1
19	FP-026-65	Bushing - Pipe 3/4 to 1/4	1
20	FP-035-38	Pipe 1/4 x 7/8 TBE	1
21	FP-078-85	Elbow - Pipe 1/4 x 90 Deg	1
22	FP-059-32	Pipe 1 x 2-1/2 TBE	1
23	FP-024-42	Coupling - Reducing 1 to 1/2	1
24	FP-035-94	Pipe 1/2 x 1-1/2 TBE	1
25	00-557718	Clamp - Hose #10	1
26	FP-087-39	Fitting - Hose 5/8 Hose to 1/2 NPT (Brass)	1
27	FP-019-25	Tee 1/2 x 1/2 x 1/2	1
28	FP-087-39	Fitting - Hose 5/8 Hose to 1/2 NPT (Brass)	1
29	00-557718	Clamp - Hose #10	1
30	00-557475	Hose 5/8 ID x 0.955 OD (1.66 Ft.) (Blue)	1
31	00-557718	Clamp - Hose #10	1
32	FP-090-63	Fitting - Hose 5/8 ID Hose to 3/8 MPT (Brass)	1
33	FP-090-37	Fitting - Hose - Anchor Coupling 3/8 NPT (Brass)	1
34	00-856769-00001	O-Ring 1/8 In. Thk	1
35	FP-090-60	Fitting - Hose (Round Hose Cap 3/4 NH Thread) (Brass)	1

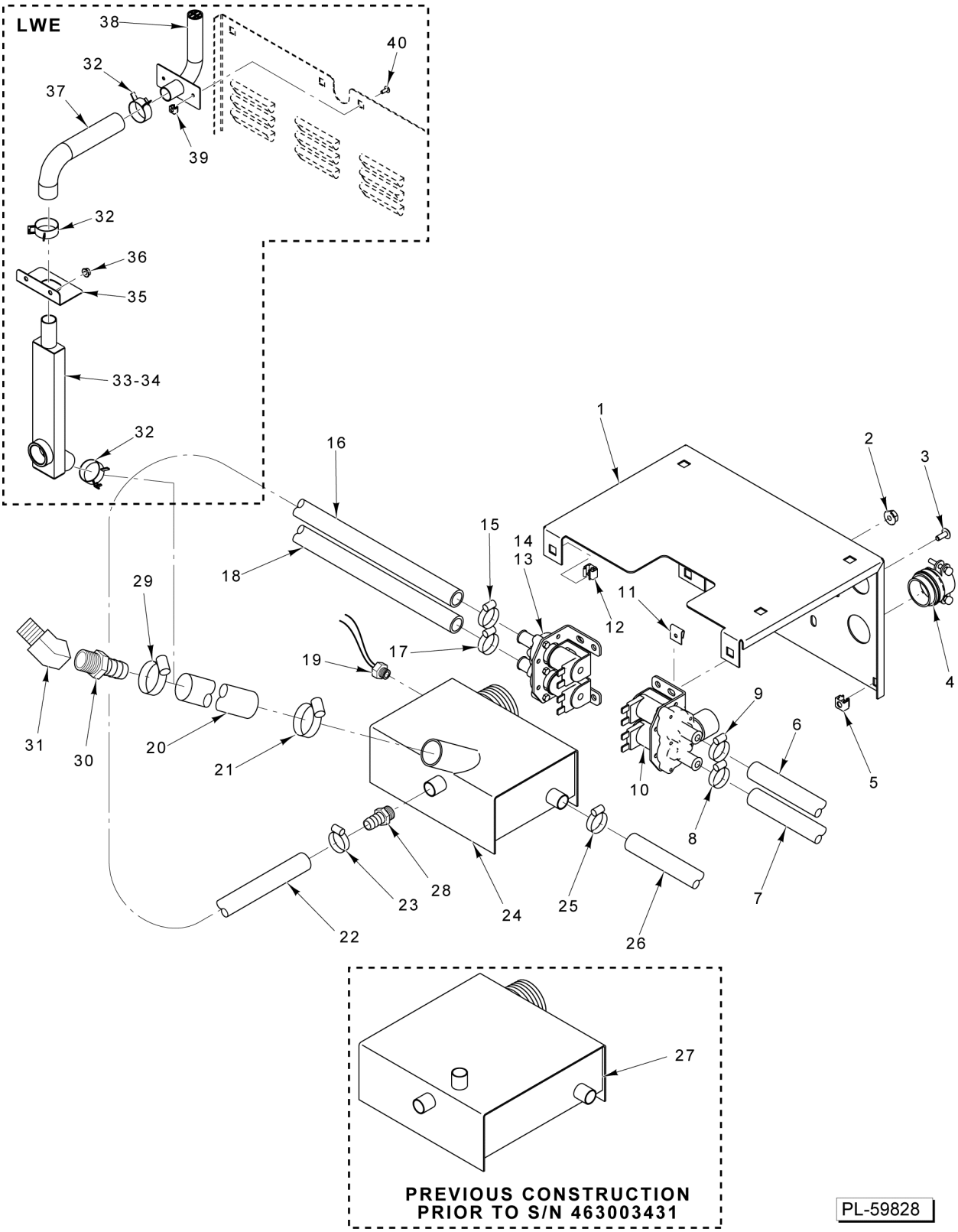

CABINET VALVE

CABINET VALVE

ILLUS. PL-59828	PART NO.	NAME OF PART	AMT.
1	00-856737-00001	Bracket - Valve Cabinet	1
2	NS-038-04	Lock Nut 1/4-20 Flange	2
3	SC-066-06	Mach. Screw 10-24 x 1/2 Phil. Truss Hd. (SST)	4
4	FE-026-41	Connector - Conduit	1
5	NS-049-01	Panel Nut 10-24	2
6	00-557681	Hose - Condensate Box Line (14 In.)	1
7	00-557681	Hose - Condensate Box Line (14 In.)	1
8	00-557844	Clamp - Hose (19mm)	1
9	00-557844	Clamp - Hose (19mm)	1
10	00-856720-00003	Valve - Dual Water (0.50 GPM / 3.8 GPM) Generator Fast & Slow Fill	1
11	NS-048-97	Panel Nut 10-24	4
12	NS-049-03	Panel Nut 1/4-20	5
13	00-856720-00006	Valve - Dual Water 3.8 - 1.0 GPM (5-Pan)	1
14	00-856720-00006	Valve - Dual Water 3.8 - 1.0 GPM (3-Pan)	1
15	00-557844	Clamp - Hose (19mm)	1
16	00-557681	Hose - Condensate Box Line (14 In.)	1
17	00-557844	Clamp - Hose (19mm)	1
18	00-557681	Hose - Compartment Condensate Line (30 In.)	1
19	00-855607-00001	Thermostat - Condensate	1
20	00-557478	Hose - Generator Drain Line (7 In.)	1
21	00-558071	Clamp	1
22	00-557681	Hose - Condensate Box Line (14 In.)	1
23	00-557844	Clamp - Hose (19mm)	1
24	00-857709-00001	Box - Condensate Weldment (Current Construction)	1
25	00-557846	Clamp - Hose (29mm)	1
26	00-557477	Hose (4 Ft.)	1
27	00-856734-00001	Box - Condensate Weldment (Previous Construction)	1
28	FP-090-59	Fitting - Hose 1/2 ID x 1/4 NPT (Brass)	1
29	00-558071	Clamp (Pro & Basic)	1
30	FP-091-18	Pipe 1 x 1-1/8 TOE (SST) (Pro & Basic)	1
31	FP-013-25	Elbow 1 x 45 Deg. (Pro & Basic)	1
32	00-558071	Clamp (LWE)	3
33	00-858078-00001	Tube - Weldment (LWE)	1
34	00-857610-00001	Probe - Sensor	1
35	00-858054-00001	Plate - Sensor Tube Mount (LWE)	1
36	NS-038-04	Lock Nut 1/4-20 Flange (LWE)	2
37	00-858072-00001	Hose - Vent (Formed) (LWE)	1
38	00-857586-00001	Vent (LWE)	1
39	NS-049-01	Panel Nut 10-24 (LWE)	1
40	SC-066-06	Mach. Screw 10-24 x 1/2 Phil. Truss Hd. (SST) (LWE)	1
*41	00-858449-00001	Well Nut 1/4-20 In	1

* Not Shown

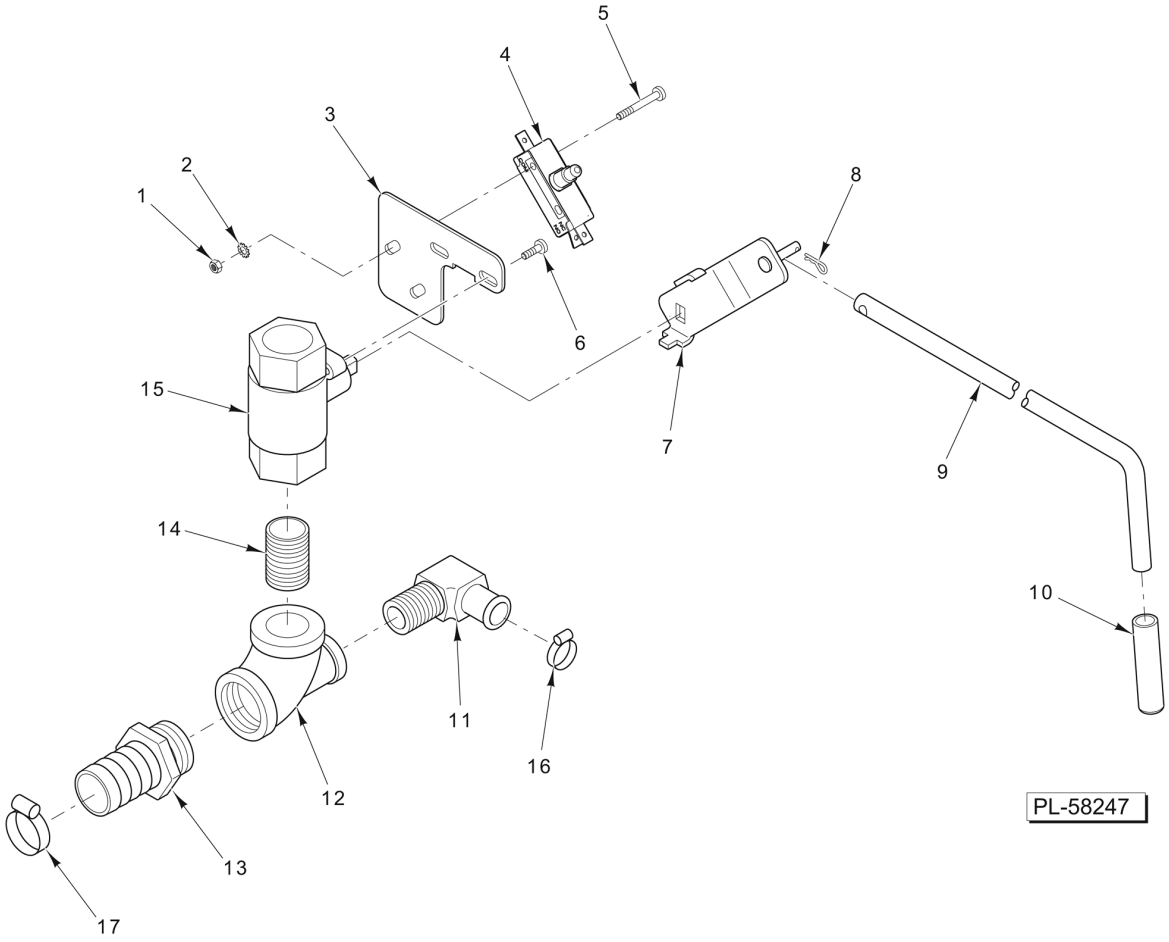

GENERATOR DRAIN - BASIC

GENERATOR DRAIN - BASIC

ILLUS. PL-58247	PART NO.	NAME OF PART	AMT.
1	NS-011-07	Nut 6-32 Hex (SST)	2
2	WL-014-03	Lockwasher #6 External (SST)	2
3	00-856779-00001	Bracket - Actuator (Generator)	1
4	00-842049	Switch (Drain Lever)	1
5	SC-021-12	Mach. Screw 6-32 x 1 Slotted Rd. Hd. (SST)	2
6	SC-066-05	Mach. Screw 10-24 x 3/8 Phil. Truss Hd. (SST)	2
7	00-858525-00001	Lever - Generator Drain	1
8	00-855729-00001	Pin - Cotter	1
9	00-856729-00001	Handle - Drain	1
10	00-856736-00001	Cap - Handle	1
11	FP-090-56	Fitting - Hose	1
12	FP-085-65	Tee - Pipe 3/4 x 3/4 x 3/4	1
13	FP-090-51	Fitting - Hose	1
14	FP-036-92	Pipe 3/4 x 1-3/8 TBE (Black)	1
15	FP-090-57	Valve 3/4 In. Ball (Bronze) (Basic)	1
16	00-557970	Clamp - Hose (20mm)	1
17	00-557847	Clamp - Hose	1

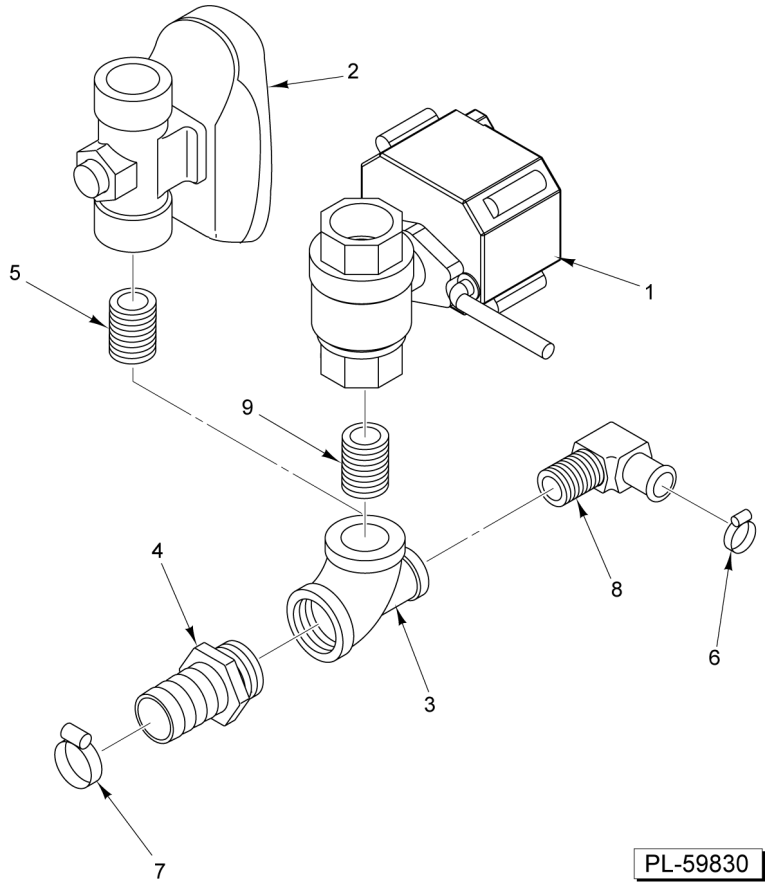

GENERATOR DRAIN - PRO

GENERATOR DRAIN - PRO

ILLUS. PL-59830	PART NO.	NAME OF PART	AMT.
1	00-858461-00001	Valve - Drain (Current Construction)	1
2	00-856718-00001	Drain Valve - Generator (Previous Construction)	1
3	FP-085-65	Tee - Pipe 3/4 x 3/4 x 3/4	1
4	FP-090-51	Fitting - Hose	1
5	FP-036-92	Pipe 3/4 x 1-3/8 TBE (Black) (Previous Construction)	1
6	00-557970	Clamp - Hose (20mm)	1
7	00-557847	Clamp - Hose	1
8	FP-090-56	Fitting - Hose	1
9	FP-041-54	Pipe 3/4 x 2 (Brass) (Current Construction)	1

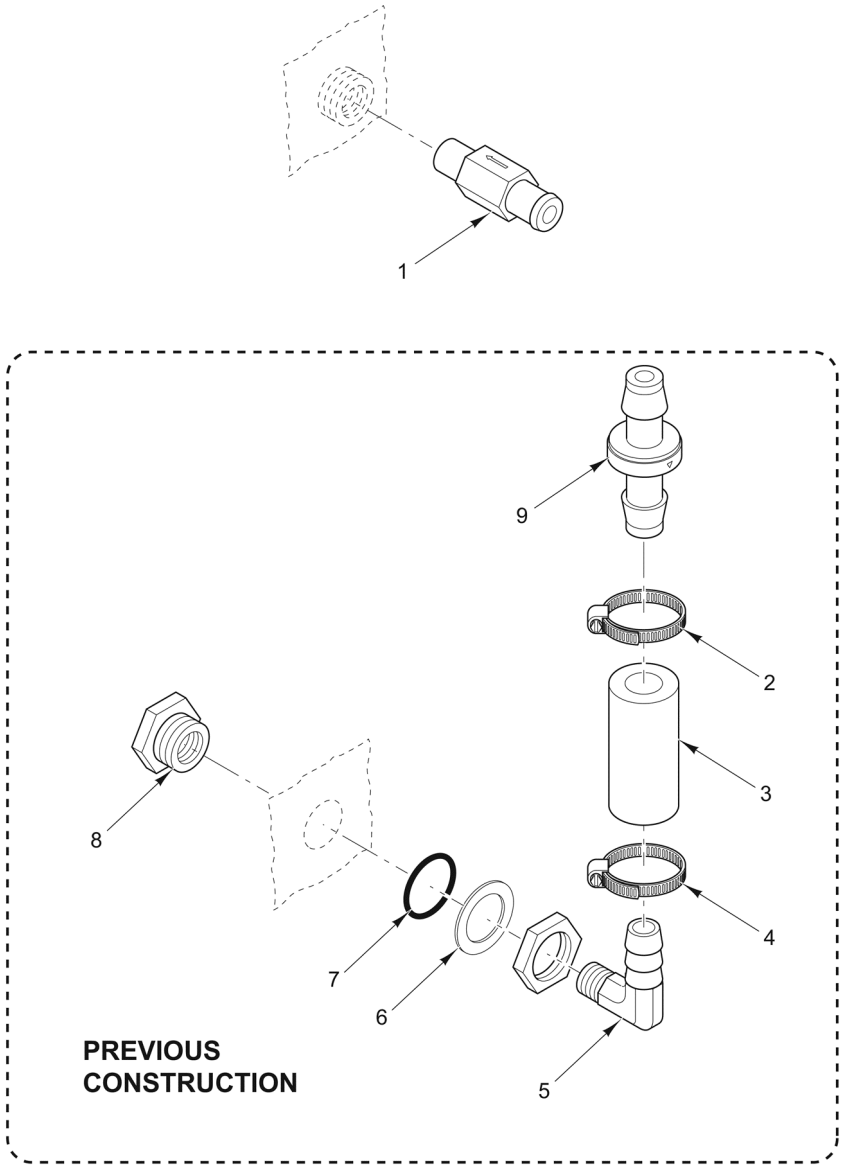

PL-58249

COMPARTMENT VACUUM BREAKER

COMPARTMENT VACUUM BREAKER

ILLUS. PL-58249	PART NO.	NAME OF PART	AMT.
1	00-857625-00001	Valve - Check (Current Construction)	1
2	00-557718	Clamp - Hose #10	1
3	00-557473	Tube Line - Compartment Vacuum	1
4	00-557718	Clamp - Hose #10	2
5	FP-090-71	Fitting - Hose 3/8 Hose by 1/8 NPT (Brass)	1
6	WS-010-26	Washer (SST)	1
7	00-856769-00001	O-Ring 1/8 In. Thk	1
8	FP-090-36	Coupling - Anchor 1/8 (Brass)	1
9	00-856755-00001	Valve - Check (Previous Construction)	1