SERVICE MANUAL



C24ET-SERIES STEAMERS

ML-152035	C24ET6 - LWE1
ML-152036	C24ET6 - LWE2
ML-152037	C24ET10 - LWE1
ML-152038	C24ET10 - LWE2
ML-152039	C24ET6 - 1
ML-152040	C24ET6 - 2
ML-152041	C24ET10 - 1
ML-152042	C24ET10 - 2
ML-152043	C24ET6 - 21
ML-152044	C24ET6 - 22
ML-152045	C24ET10 - 21
ML-152046	C24ET10 - 22

- NOTICE -

This Manual is prepared for the use of trained Hobart Service Technicians and should not be used by those not properly qualified.

This manual is not intended to be all encompassing. If you have not attended a Hobart Service School for this product, you should read, in its entirety, the repair procedure you wish to perform to determine if you have the necessary tools, instruments and skills required to perform the procedure. Procedures for which you do not have the necessary tools, instruments and skills should be performed by a trained Hobart Service Technician.

The reproduction, transfer, sale or other use of this manual, without the express written consent of Hobart, is prohibited.

This manual has been provided to you by ITW Food Equipment Group LLC ("ITW FEG") without charge and remains the property of ITW FEG, and by accepting this manual you agree that you will return it to ITW FEG promptly upon its request for such return at any time in the future.

TABLE OF CONTENTS

SERVICE UPDATES 4
SERVICE UPDATES 4
TIS DOCUMENT LIST - C24ET SERIES STEAMERS 4

GENERAL 6
INTRODUCTION 6
OPERATION 6
INSTALLATION 6
LUBRICATION 6
CLEANING 6
ELECTRICAL SPECIFICATIONS - BASIC / PROFESSIONAL MODELS 7
ELECTRICAL SPECIFICATIONS - LWE MODEL 7
WATER SPECIFICATIONS - ALL MODELS 7
TOOLS 8

REMOVAL AND REPLACEMENT OF PARTS 10
RIGHT SIDE TOP PANEL 10
RIGHT SIDE BOTTOM PANEL 10
LEFT SIDE TOP PANEL 10
LEFT SIDE BOTTOM PANEL 11
TOP REAR PANEL 11
BOTTOM REAR PANEL 12
BOTTOM FRONT PANEL 13
TOP COVER 13
DOOR 13
DOOR GASKET 14
DOOR HANDLE 14
DOOR LATCH 15
HINGE BEARINGS 16
DRAIN BOX 16
CONDENSATE THERMOSTAT 17
HEATING ELEMENT 18
STEAM GENERATOR TANK 19
MOTORIZED DRAIN VALVE (PROFESSIONAL) 21
DRAIN TANK MANUALLY 21
REMOVAL 23
SUPER-HEATER ELEMENT 24
HOLD THERMOSTAT 24
HIGH LIMIT THERMOSTAT 25
WATER LEVEL PROBES 25
SENSOR PROBE 26
UPPER COOKING COMPARTMENT 26
LOWER COOKING COMPARTMENT 27
PRESSURE SWITCH 29
VACUUM RELIEF VALVE 30
FILL VALVES 30
ELECTRONIC COMPONENT 31
PID CONTROLLER 31
SOLID STATE CONTACTOR 32
ON/OFF SWITCH 32
INDICATOR LIGHT ASSEMBLY 32
DOOR SWITCH 33
TIMER 33
BUZZER 34

SERVICE PROCEDURES AND ADJUSTMENTS 35
DOOR LATCH ADJUSTMENT 35

HEATING ELEMENT DIAGNOSTIC CHECK - LWE MODELS 35
HEATING ELEMENT DIAGNOSTIC CHECK - BASIC / PROFESSIONAL MODELS 37
SUPER-HEATER DIAGNOSTIC CHECK - PROFESSIONAL MODELS 38
PID CONTROLLER TEST - LWE MODEL 38
SENSOR PROBE TEST - LWE MODEL 39
PRESSURE SWITCH CHECK / ADJUST 40
MANUAL DRAIN 41

ELECTRICAL OPERATION 42
COMPONENT FUNCTION 42
COMPONENT LOCATION 44
SEQUENCE OF OPERATION (BASIC MODEL) 54
SEQUENCE OF OPERATION (PRO MODEL) 56
SEQUENCE OF OPERATION (LWE MODEL) 57

DIAGRAMS 60
WIRING DIAGRAMS 60
WATER / STEAM DIAGRAM 65

TROUBLESHOOTING 66
ALL MODELS 66
LWE MODEL 68

© VULCAN 2021

SERVICE UPDATES

SERVICE UPDATES

- January 2019

  Updated MOTORIZED DRAIN VALVE (PROFESSIONAL)

- March 2018

  New release.

TIS DOCUMENT LIST - C24ET SERIES STEAMERS

SERVICE TAB	
Document Title	**Document Type**
C24ET SERIES STEAMERS Service Manual	Service Manual

SERVICE TAB (Multimedia)	
Document Title	**Document Type**
All Stainless Steel with Automatic Timers & Manual Boilers Direct Steam - ST. STL. LEG, Pedestal or Wall Mounted Owners Manual	Instructions
Electric Boiler Owners Manual	Instructions
Repair Flood-Damaged Food Equipment	Misc
ET SERIES STEAMERS Installation and Operation	Operator
Fundamentals of Steam	Service Instructions
Fundamentals of Gas	Service Instructions
Hobart Water Filter Replacement Cross Reference Sheet	Service Instructions
Pilot & Burner Problems on Units Without Powered Burners Service Information	Service Instructions
ScaleStick Twin System, Part No. 01-234301-51200	Service Instructions
Water Level Pressure Switches Information	Service Instructions
Rating Plate Locations on Current Vulcan-Hart/Wolf Range Equipment	Technical Service Bulletin (TSB)
SB630 Gas Range Thermocouples	Technical Service Bulletin (TSB)
SB760 Vulcan Steam Temporary Service Instruction / Inspect All Warrick Water Level	Technical Service Bulletin (TSB)
SB800 Vulcan Steam Equipment - Enhanced Ignition Modules	Technical Service Bulletin (TSB)
SB860 Atmospheric Steamer Door Switch Actuator Rod	Technical Service Bulletin (TSB)
TSB 1374 Water Level Control Part No. 844069-1 Changes	Technical Service Bulletin (TSB)
TSB 1393 Steam Cooking Equipment - Prevention, Detection and Treatment of Corrosion on Stainless Steel	Technical Service Bulletin (TSB)
TSB 1037A Hobart to Vulcan "Common" Model Cross Reference List	Technical Service Bulletin (TSB)

SERVICE TAB (Multimedia)	
TSB 1298A Atmospheric Steamer Door Switch Actuator Rod	Technical Service Bulletin (TSB)
TSB 1339 Vulcan High Efficiency Gas Steamers - Burner Noise	Technical Service Bulletin (TSB)
Hobart & Vulcan Steamers/Kettles with Warrick Water Level Control Boards	Temporary Service Instructions (TSI)
Steamers - Main Transformer Primary Tap on Electric Machines	Temporary Service Instructions (TSI)
Steamers - Motorized Valve P/N 856718-1 Temporarily Unavailable	Temporary Service Instructions (TSI)
Steamers Wire Insulation Pinched Under Screw Lug on Terminal Block & Contractors	Temporary Service Instructions (TSI)

PARTS TAB	
Document Title	**Document Type**
C24ET Series Steamer	Parts Catalog

GENERAL

INTRODUCTION

This manual is applicable to the models and ML numbers listed on the cover page. Procedures apply to all models unless specified otherwise.

BASIC Steamers

Basic model steamers use traditional steam cooking components and methods.

PROFESSIONAL Steamers

Professional model steamers use traditional steam cooking components and methods. This model adds a super-heater element to decrease cooking times and increase temperatures.

LWE Steamers

Low Water and Energy (LWE) steamers provide energy and water saving steam generation that meets ENERGY STAR® performance levels. The steamers feature an electronic PID controller and solid state contactor. These work together to pulse power to the heating elements during a cook cycle, reducing the amount of electrical energy and water consumed.

Steam Cooking

Atmospheric steamers offer an efficient way to produce many foods in either small portions or larger batches. Atmospheric convection steam cooking steam cooks fresh foods or defrosts and steam cooks frozen foods. This provides maximum color, flavor and nutritional value with the least expenditure of energy and labor. The atmospheric steaming compartment allows the operator to open and close the door anytime during a cooking cycle. The generator element will shut off when the door is opened then re-start when the door is closed.

MODELS			
Pans	**Configuration**	**Model**	**Power**
6	Basic	C24ET6-21	208/240 VAC
6	Basic	C24ET6-22	480 VAC
6	Professional	C24ET6-1	208/240 VAC
6	Professional	C24ET6-2	480 VAC
6	LWE	C24ET6-LWE1	208/240 VAC
6	LWE	C24ET6-LWE2	480 VAC
10	Basic	C24ET10-21	208/240 VAC
10	Basic	C24ET10-22	480 VAC
10	Professional	C24ET10-1	208/240 VAC
10	Professional	C24ET10-2	480 VAC
10	LWE	C24ET10-LWE1	208/240 VAC
10	LWE	C24ET10-LWE2	480 VAC

OPERATION

Refer to Installation & Operation Manual (F37512) for operation instructions. This manual is located on Vulcan Resource Center (https://my.vulcanfeg.com/ resourcecenter/ vulcanwolfberkel/default.aspx).

INSTALLATION

Refer to Installation & Operation Manual (F37512) for installation instructions. This manual is located on Vulcan Resource Center (https://my.vulcanfeg.com/ resourcecenter/ vulcanwolfberkel/default.aspx).

LUBRICATION

Refer to Lubrications Manual F20067 for current values.

CLEANING

Refer to Installation & Operation Manual (F37512) for cleaning instructions. This manual is located on

Vulcan Resource Center (https://my.vulcanfeg.com/ resourcecenter/ vulcanwolfberkel/default.aspx).

ELECTRICAL SPECIFICATIONS - BASIC / PROFESSIONAL MODELS

NOTE: All C24ET basic and professional steamers (with the exception of 480V steamers) are shipped pre-wired for 208/60/3 operation, Steamer heating element wiring connection change is required if connecting to 208/60/1, 240/60/1, or 240/60/3 electrical service. See WIRING DIAGRAMS for proper connections.

Power Requirements													
Model	Total kW	Hz	3 Phase									1 Phase	
			208 VAC			240 VAC			480 VAC			208 VAC	240 VAC
			L1	L2	L3	L1	L2	L3	L1	L2	L3		
C24ET6-21	17	50 /60	45	53	45	41	41	41	--	--	--	82	71
C24ET6-1	18.5		49	53	49	47	41	47	--	--	--	88	77
C24ET6-22	17		--	--	--	--	--	--	20	20	20	--	--
C24ET6-2	18.4		--	--	--	--	--	--	24	21	21	--	--
C24ET10-21	30		79	94	79	72	72	72	--	--	--	144	126
C24ET10-1	31.5		83	94	83	78	72	78	--	--	--	150	131
C24ET10-22	30		--	--	--	--	--	--	36	36	36	--	--
C24ET10-2	31.5		--	--	--	--	--	--	40	37	37	--	--

ELECTRICAL SPECIFICATIONS - LWE MODEL

NOTE: All C24ET LWE steamers are shipped pre-wired for 208/60/3 or 480V/50/60/3 operation. 208V 3 phase is an unbalanced load and the value listed for amperage is the maximum on any leg. The steamer can be field converted from 208V/50/60/3 electrical service by disconnecting the fourth heating element wires to the contactors. See WIRING DIAGRAMS for proper connections. If field converting, check transformer for proper voltage setting. **The LWE units are not designed to operate on single phase.**

Power Requirements											
Model	Total kW	Hz	Three Phase Power								
			208 VAC			240 VAC			480 VAC		
			L1	L2	L3	L1	L2	L3	L1	L2	L3
C24ET6-LWE1	17	50/60	45	53	45	41	41	41	--	--	--
C24ET6-LWE2	18.5		--	--	--	--	--	--	20	20	20
C24ET10-LWE1	30		79	94	79	72	72	72	--	--	--
C24ET10-LWE2	30		--	--	--	--	--	--	36	36	36

WATER SPECIFICATIONS - ALL MODELS

Water Supply Requirements

Supply pressure should be	20-60 psig
In line strainer for supply line (Supplied)	__
Hardness*	less than 3 grains
Silica	less than 13 ppm
Total chlorine	less than 0.1 ppm

PH range	7 to 8
Undissolved solids	less than 5 microns
NOTE: *17.1 ppm = 1 grain of hardness.	

NOTICE

Chlorine and chloramine above levels of 0.1 ppm will cause permanent damage to the steam generator and cooking compartment. Contact water filter system manufacturer to ensure this requirement is met

Hardness above 4 grains/gal should be treated by water conditioner, water softener, or in-line treatment.

Water Conditioning

It is recommended that a local water treatment specialist be consulted before the installation of any steam generating equipment.

Furnishing the steam generator with properly conditioned water to reduce scale formation is important. Scale formation will reduce steam output, cause premature component failure, and shorten equipment life. Most water supplies contain scale producing minerals such as calcium and magnesium. As steam is generated, the minerals remain and dissolve into the remaining water. As the concentration of these minerals increases past a certain point, they precipitate from the water and coat the inside of the tank, heating elements, thermostat bulbs and water level probes. Because of the high temperature of these surfaces, the precipitated minerals bake onto them and become very difficult to remove.

This phenomenon causes several problems:

1. Reduces the heat transfer efficiency of the heaters.
2. Causes premature failure of the heaters.
3. Water level probes will give false readings.
4. Thermostat bulbs will sense temperature incorrectly.

These problems are common to any manufacturer's steamer regardless of design, but they can all be prevented by furnishing the steam generator tank with properly conditioned water.

Other chemical properties in water supplies can also affect good steam generation and vary from within each state and locality. The water level probes in the steam generator tank use ions in the water to detect the water level. **DO NOT** use fully demineralized or de-ionized water since it is non-conductive and the water level cannot be detected.

NOTE: The use of strainers or filters will not remove minerals from the water.

Steamers that operate over a long period of time without the benefit of properly conditioned water, which have developed a heavy scale build up, should be cleaned before connecting to a conditioned water supply.

TOOLS

Standard

- Standard set of hand tools.
- Pipe thread sealant.
- Teflon tape.
- VOM with minimum of NFPA-70E CATIII 600V, UL/CSA/TUV listed. Sensitivity of at least 20,000 ohms per volt and the ability to measure DC micro amps. Meter leads must also be rated at CAT III 600V.
- Clamp on type amp meter with minimum of NFPA-70E CAT III 600V,UL/CSA/TUV listed.
- ESD (Electrostatic Discharge) protection kit

Special

- Torque wrench - capable of measuring 70 in-lb.
- RTV 109 silicone sealant or equivalent for use when replacing door gasket.
- Lubriplate 630AA.
- Loctite 241.
- Loctite 271.
- Loctite 565.
- Petrogel 833652
- High temperature aluminum foil tape for use when securing insulation around cooking compartment.
- Pressure gauge assembly for use when checking and adjusting pressure switch:
  - Pressure gauge - 0 to 15 psi, 1/4" NPT, recommended Grainger Part No. 36TW02 or equivalent for steamers with nonadjustable pressure switch.
  - Low pressure gauge - 0 to 5 psi, 1/4" NPT, recommended Grainger Part No. 2C641 or equivalent for steamers with adjustable pressure switch.

- Water hose to pipe coupling - 3/4" FGHT x ½" FNPT- swivel type, double female brass, Grainger Part No. 4KG87 or equivalent.
- Reducer bushing - ½" MNPT x 1/4" FNPT brass, Grainger Part No. 6AYW8, package of 10 or single bushing equivalent (purchase locally).

REMOVAL AND REPLACEMENT OF PARTS

RIGHT SIDE TOP PANEL



⚠ WARNING

Disconnect the electrical power to the machine and follow lockout / tagout procedures.

1. Remove five screws from locations noted in Fig. 1.

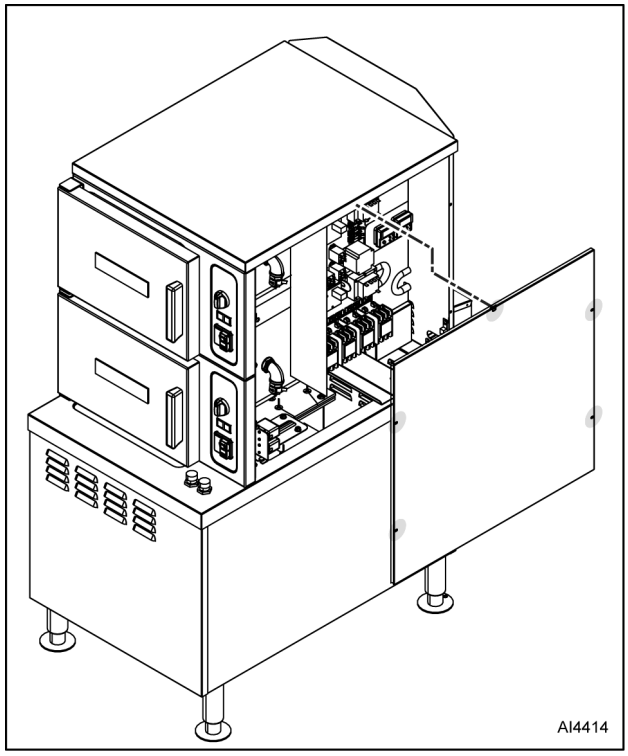

Fig. 1

2. Pull out bottom of panel and slide down out of top cover.
3. Reverse procedure to install.

RIGHT SIDE BOTTOM PANEL



⚠ WARNING

Disconnect the electrical power to the machine and follow lockout / tagout procedures.

1. Remove two screws from locations noted in Fig. 2.

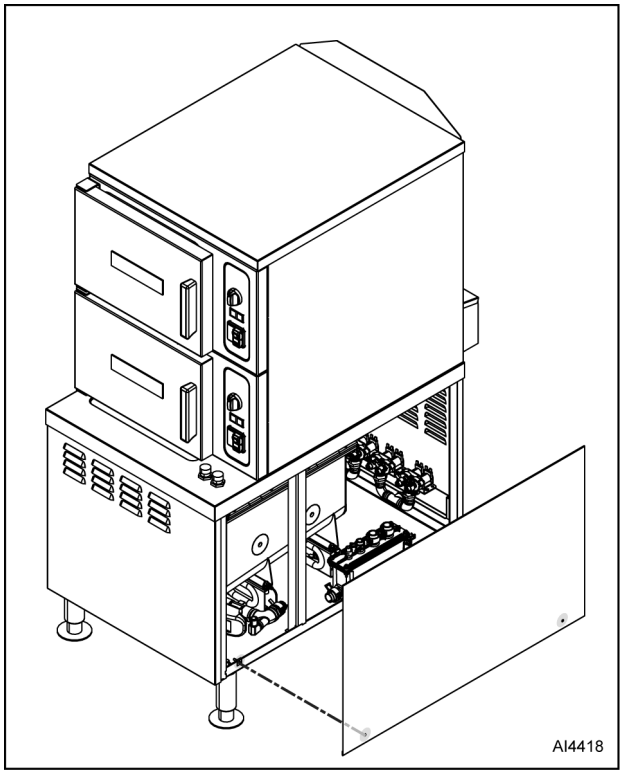

Fig. 2

2. Pull out bottom of panel and slide down out of frame.
3. Reverse procedure to install.

LEFT SIDE TOP PANEL



⚠ WARNING

Disconnect the electrical power to the machine and follow lockout / tagout procedures.

1. Remove five screws from locations noted in Fig. 3.

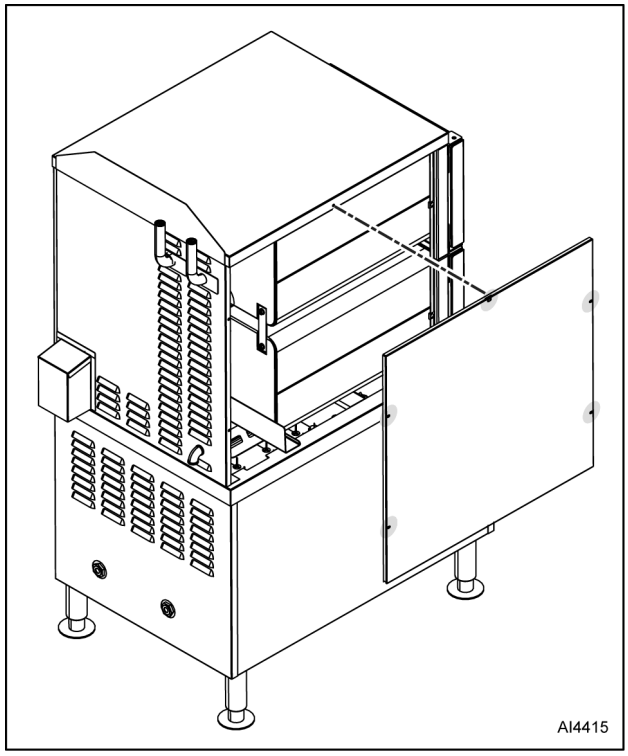

Fig. 3

2. Pull out bottom of panel and slide down out of top cover.
3. Reverse procedure to install.

LEFT SIDE BOTTOM PANEL



⚠ WARNING

Disconnect the electrical power to the machine and follow lockout / tagout procedures.

1. Remove two screws from locations noted in Fig. 4.

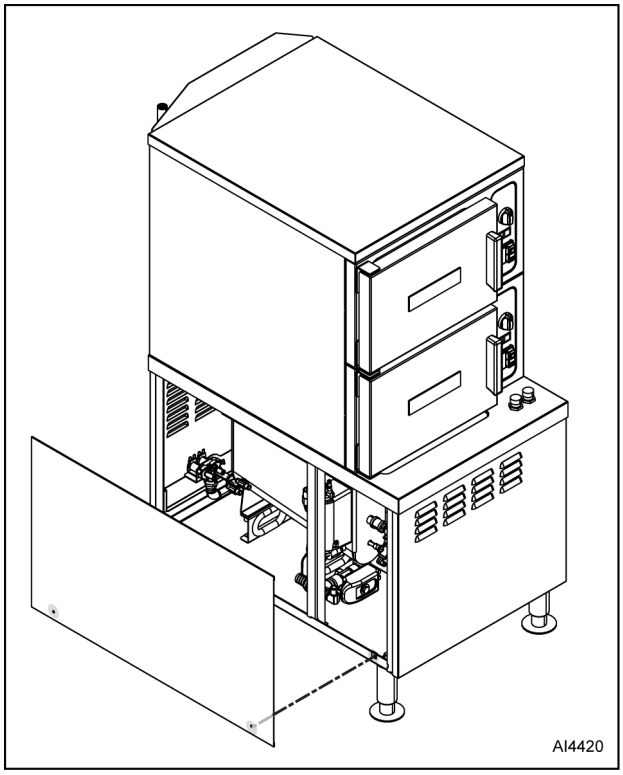

Fig. 4

2. Pull out bottom of panel and slide down out of frame.
3. Reverse procedure to install.

TOP REAR PANEL



⚠ WARNING

Disconnect the electrical power to the machine and follow lockout / tagout procedures.

1. Remove RIGHT SIDE TOP PANEL and LEFT SIDE TOP PANEL.
2. If desired, remove TOP COVER.
3. **LWE Models Only:** Compress hose fittings and remove hoses from LWE vents.

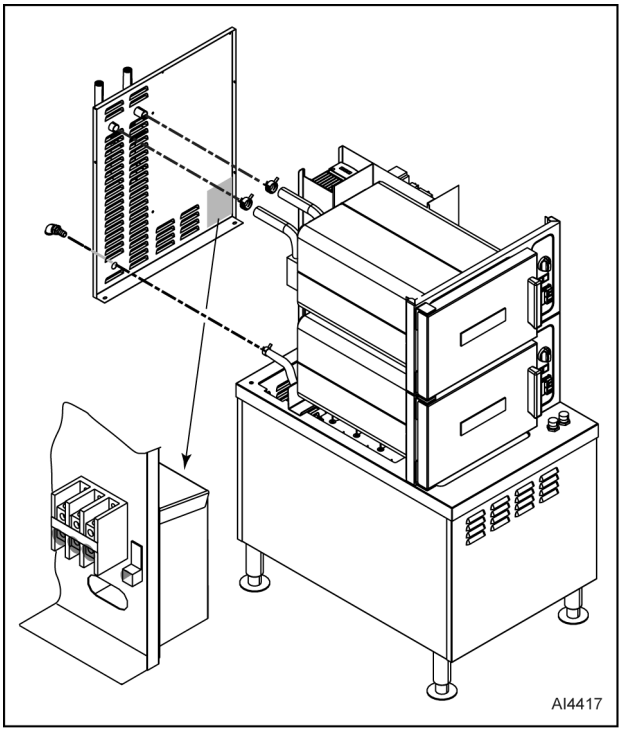

Fig. 5

4. Compress hose fitting and remove hose from rear vent fitting.
5. Remove facility power cable wires from input terminal and ground block.

NOTE: Wires can be left connected to terminal block as long as top rear panel is supported and no strain is placed on the electrical leads.

6. Remove four screws as noted in Fig. 6

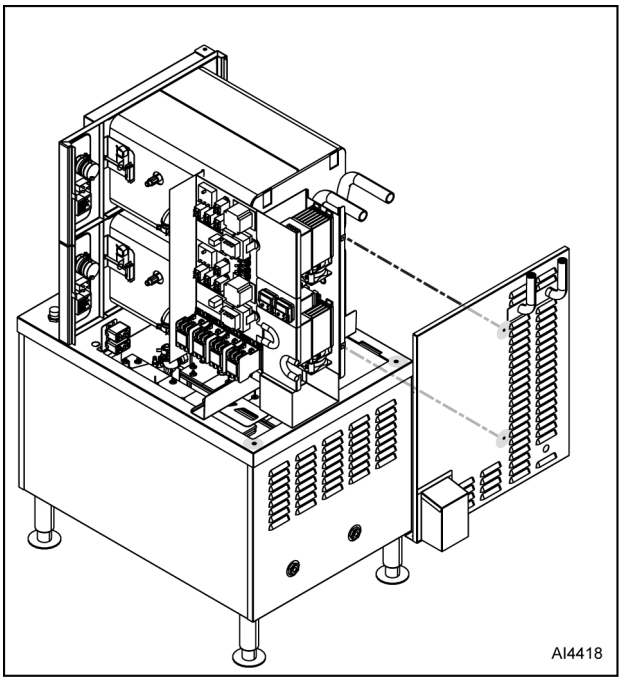

Fig. 6

NOTICE

Do not reuse hose clamps. Always replace opened / removed hose clamps with new ones.

7. Reverse procedure to install.

BOTTOM REAR PANEL



⚠ WARNING

Disconnect the electrical power to the machine and follow lockout / tagout procedures.

1. Remove five screws from locations noted in Fig. 7.

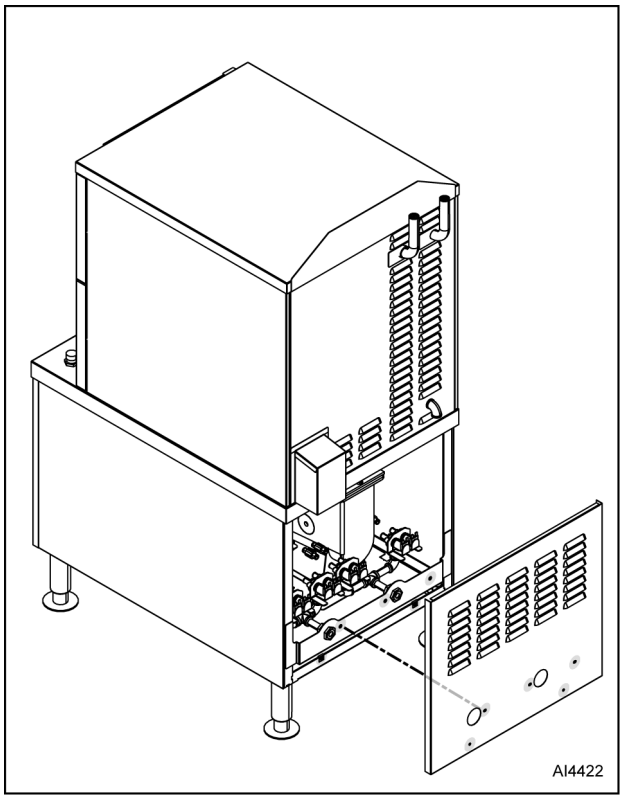

Fig. 7

2. Pull out bottom of panel and slide down out of frame.
3. Reverse procedure to install.

BOTTOM FRONT PANEL



⚠ WARNING

Disconnect the electrical power to the machine and follow lockout / tagout procedures.

1. Remove two screws from locations noted in Fig. 8.

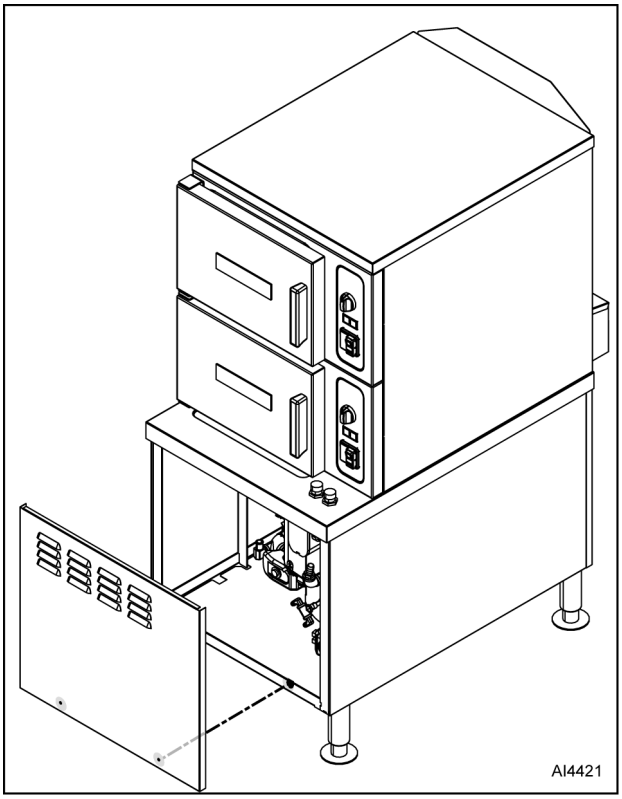

Fig. 8

2. Pull out bottom of panel and slide down out of frame.
3. Reverse procedure to install.

TOP COVER



⚠ WARNING

Disconnect the electrical power to the machine and follow lockout / tagout procedures.

1. Remove five screws from locations noted in Fig. 9.

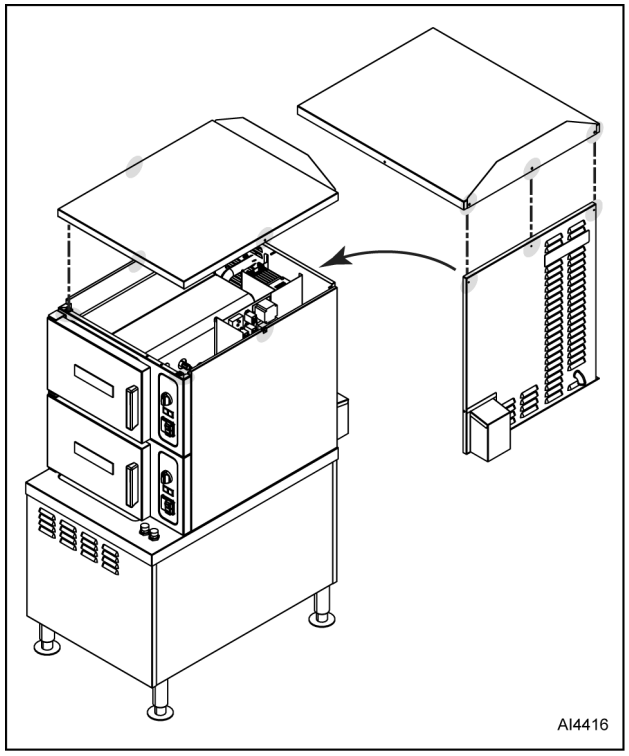

Fig. 9

2. Lift cover off steamer unit.
3. Reverse procedure to install.

DOOR



⚠ WARNING

Disconnect the electrical power to the machine and follow lockout / tagout procedures.

1. Close door.
2. Remove LEFT SIDE TOP PANEL.
3. Remove nuts (Fig. 10) from upper hinge located inside front panel.

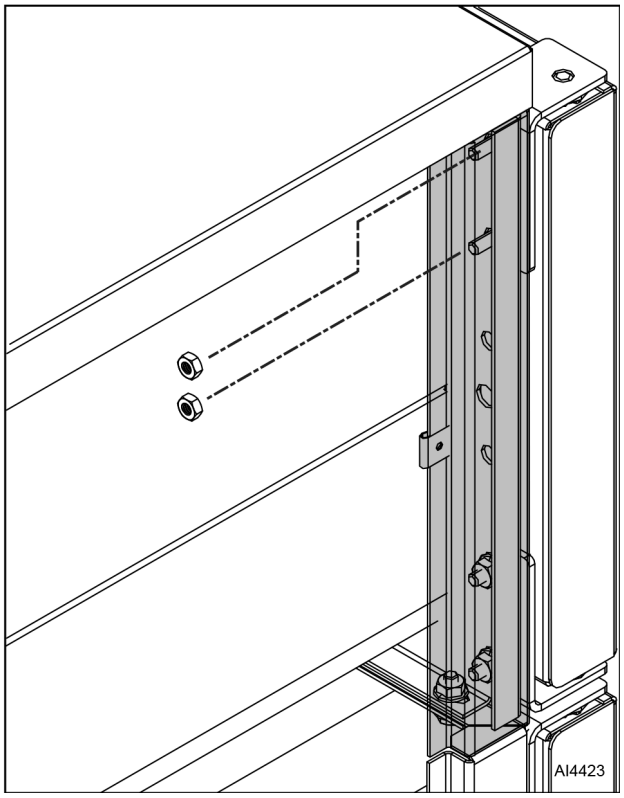

Fig. 10

4. Open door slightly and pull upper hinge up and out of upper door hinge bushing.
5. Lift door assembly (Fig. 11) up and off lower door hinge.
6. Reverse procedure to install.
7. Check door for fit and proper sealing of gasket.

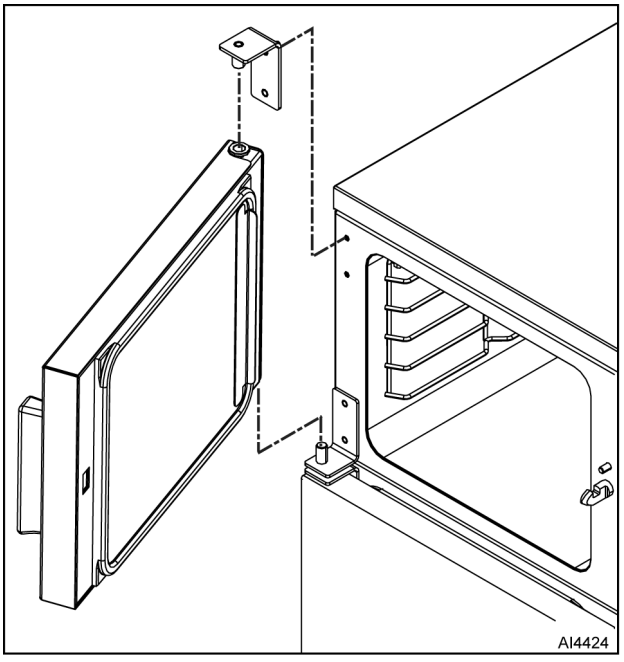

Fig. 11

DOOR GASKET



⚠ WARNING

Disconnect the electrical power to the machine and follow lockout / tagout procedures.

1. Open door.
2. Remove shoulder screws, gasket door guard (1, Fig. 12), and gasket door retainer (2) from door assembly (4).

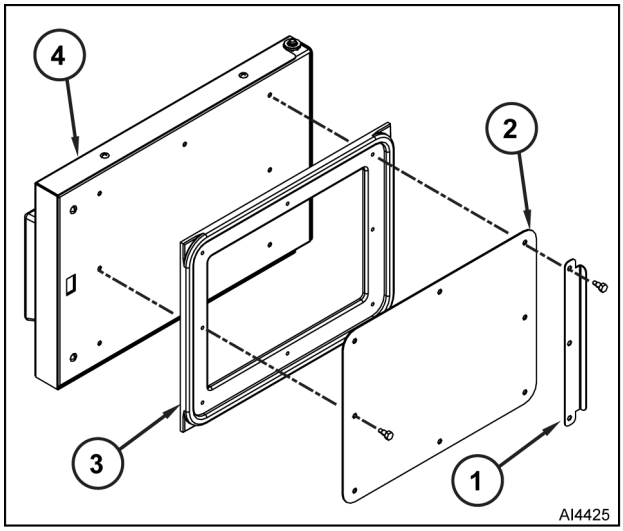

Fig. 12

3. Remove gasket (3) from inner door panel.
4. Remove RTV from inner door panel.

NOTE: Reapply RTV 109 to portion of inner door panel where it was removed in Step 4.

NOTE: Place a small amount of RTV109 into inner door panel gasket screw holes before assembly.

5. Reverse procedure to install.

DOOR HANDLE



⚠ WARNING

Disconnect the electrical power to the machine and follow lockout / tagout procedures.

Removal

1. Open door.
2. Remove four screws from locations noted in Fig. 13.

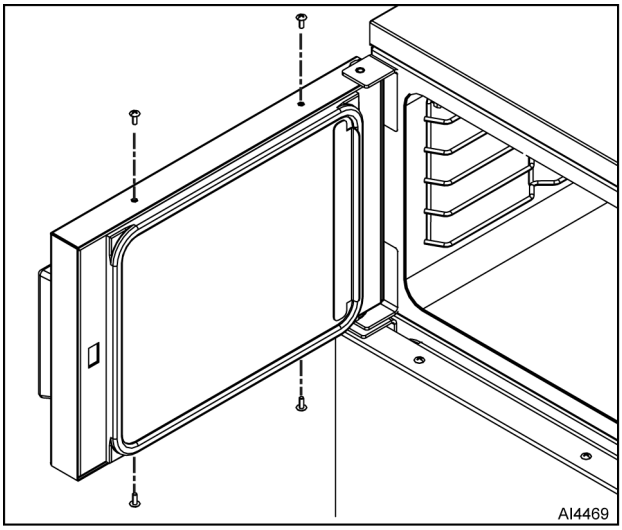

Fig. 13

3. Pull outer door housing (Fig. 14) away from inner door panel starting at hinge side of door to separate door halves.

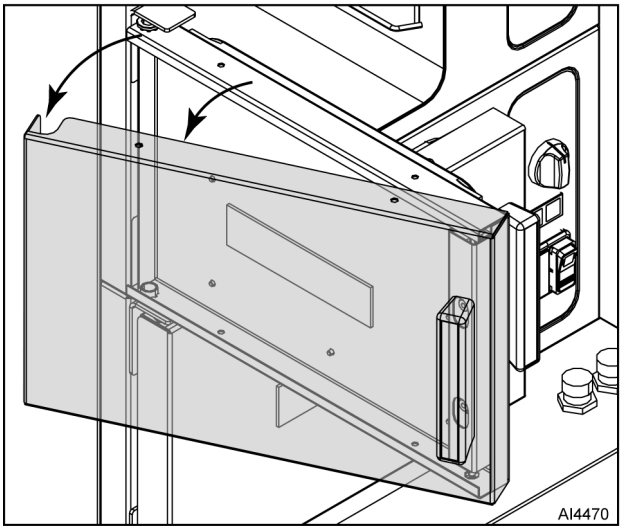

Fig. 14

4. Remove lock nuts, stepped spacers (3, Fig. 15) and door handle (1) from door.

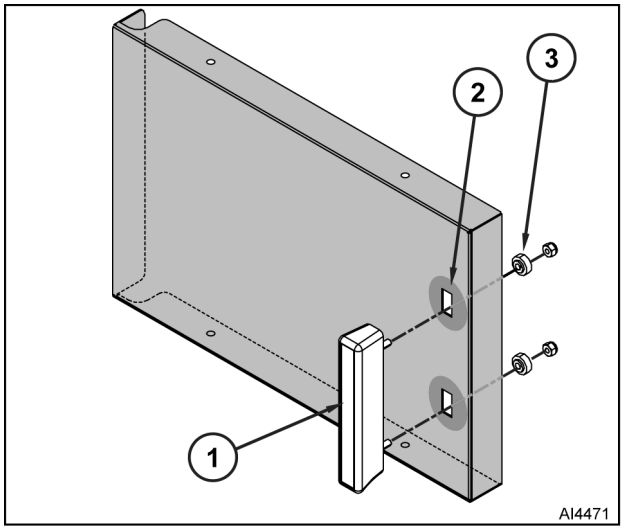

Fig. 15

NOTE: Smaller radius of step spacers fit into outer door housing slots and is used to provide clearance for handle operation.

NOTE: Apply Lubriplate 630AA (2, Fig. 15) around slots of outer door housing where step spacers contact housing.

NOTE: Make sure door handle arrow points up.

NOTE: Apply Loctite 242 to screw threads.

5. Reverse procedure to install.

DOOR LATCH



⚠ WARNING

Disconnect the electrical power to the machine and follow lockout / tagout procedures.

1. Separate inner and outer door housing assembly. Refer to DOOR HANDLE.
2. Remove screws and latch mechanism (Fig. 16).

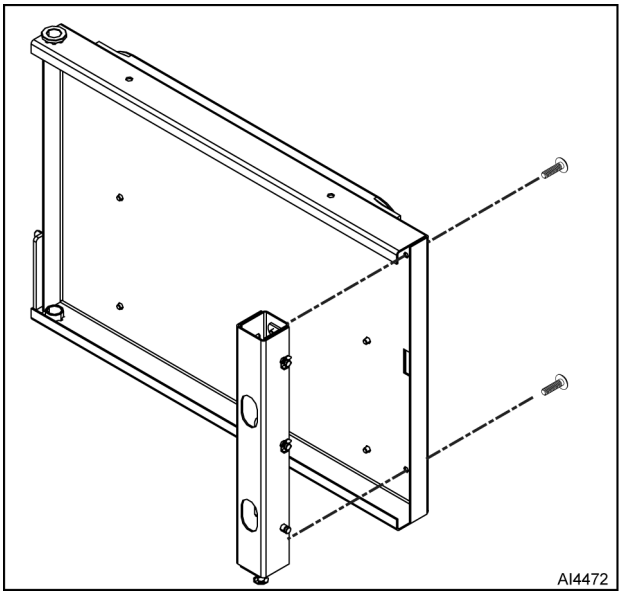

Fig. 16

3. Remove E-clip (Fig. 17) from latch assembly pins and pull pins from latch mechanism.
4. Remove retaining pin from spring pin.
5. Separate sliding bracket from stationary bracket.

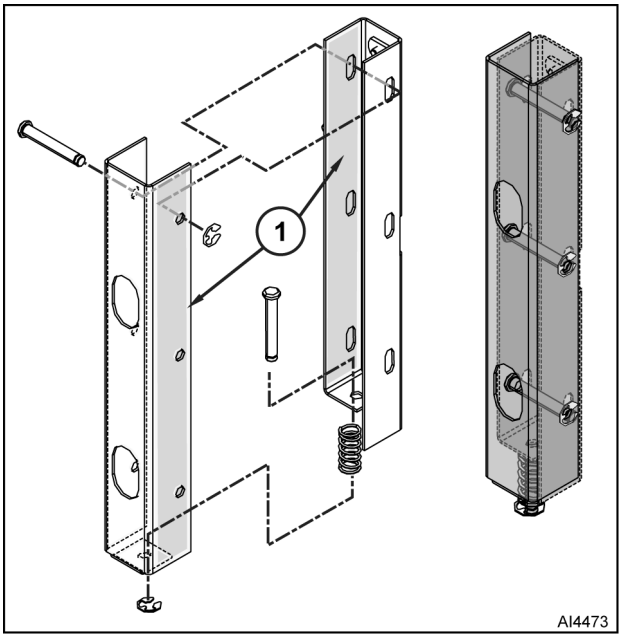

Fig. 17

NOTE: Apply Lubriplate 630AA (1, Fig. 17) to sides of sliding bracket.

NOTE: Install pins so heads face inward toward hinge side of inner door panel.

NOTE: Apply Loctite 271 to threads of screws before assembly and secure latch assembly to inner door panel.

6. Reverse procedure to install.

HINGE BEARINGS



⚠ WARNING

Disconnect the electrical power to the machine and follow lockout / tagout procedures.

1. Close door.
2. Remove LEFT SIDE TOP PANEL.
3. Remove DOOR.
4. Pry top (1, Fig. 18) and bottom (2) hinge bearings from door assembly.

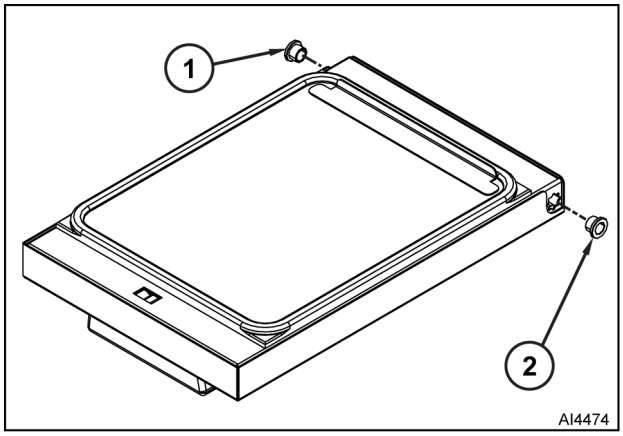

Fig. 18

NOTE: Do not drive bearing into place or door panel could be damaged. Press bearing into position.

NOTE: When replacing door hinge bearings, replace both hinge bearings.

5. Reverse procedure to install.

DRAIN BOX



⚠ WARNING

Disconnect the electrical power to the machine and follow lockout / tagout procedures.

1. Turn off machine to drain steam generator tank. Allow steamer to complete drain cycle.
2. Turn off water supply.
3. Remove RIGHT SIDE BOTTOM PANEL.
4. Disconnect drain plumbing from drain box outlet fitting.

NOTE: Document wire connections.

5. Disconnect condensate thermostat wires.
6. Disconnect following hoses:
    - Cold water condensate hoses (2 and 6, Fig. 19).

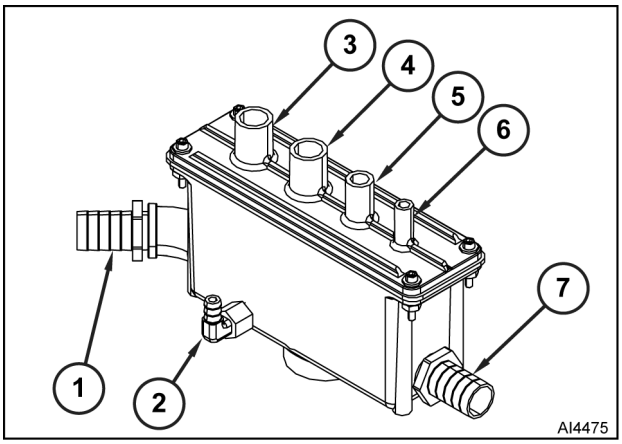

Fig. 19

- Cooking compartment drain hoses (3 and 4).
- Steam generator drain hoses (1 and 7).
- Pressure relief hose (5).

7. Remove two screws and drain box (Fig. 20).

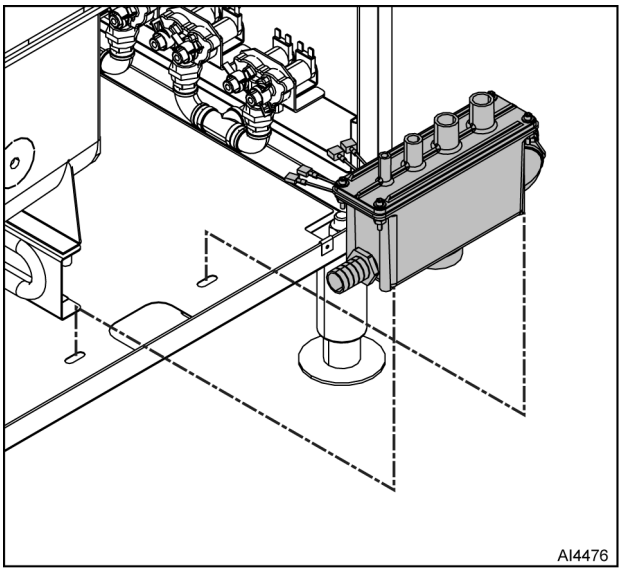

Fig. 20

NOTE: Retain condensate thermostat for use on replacement drain box.

8. Remove condensate thermostat (Fig. 21) from drain box.

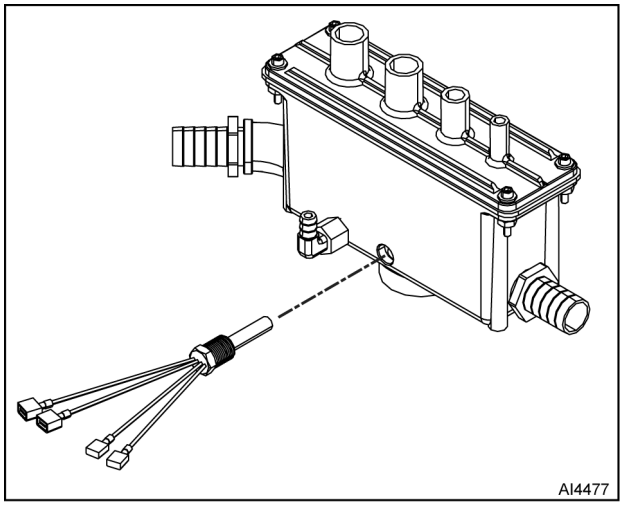

Fig. 21

NOTICE

Do not reuse hose clamps. Always replace opened / removed hose clamps with new ones.

NOTE: Apply thread sealant to condensate thermostat threads.

9. Reverse procedure to install.

CONDENSATE THERMOSTAT



⚠ WARNING

Disconnect the electrical power to the machine and follow lockout / tagout procedures.

1. Allow steamer to complete drain cycle.
2. Turn off water supply.
3. Unthread condensate thermostat (Fig. 22) from drain box.

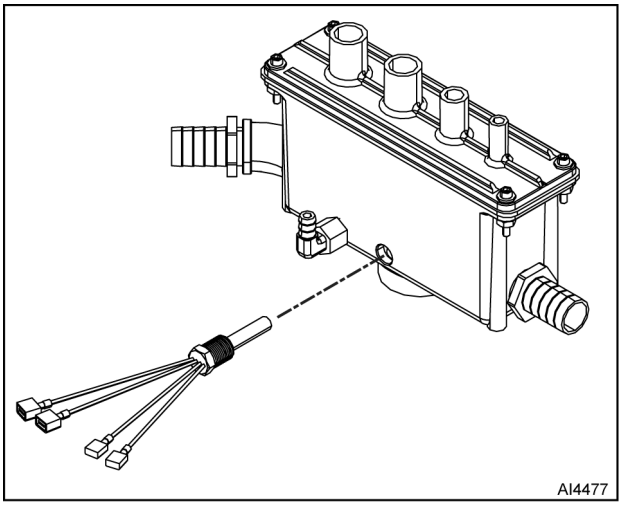

Fig. 22

NOTICE

Do not reuse hose clamps. Always replace opened / removed hose clamps with new ones.

NOTE: Apply thread sealant to condensate thermostat threads.

4. Reverse procedure to install.

HEATING ELEMENT



⚠ WARNING

Disconnect the electrical power to the machine and follow lockout / tagout procedures.

1. Turn off machine to drain steam generator tank. Allow steamer to complete drain cycle.
2. Turn off water supply.

NOTE: Remove left panel for upper compartment steam generator, right panel for lower compartment steam generator.

3. Remove following covers and panels:
   - RIGHT SIDE TOP PANEL
   - BOTTOM FRONT PANEL
   - RIGHT SIDE BOTTOM PANEL

     or

     LEFT SIDE BOTTOM PANEL

NOTE: Document wire connections.

4. Disconnect heating element lead wires from limiting contactor (1A or 2A) Fig. 23 and regulating contactor (1B or 2B).

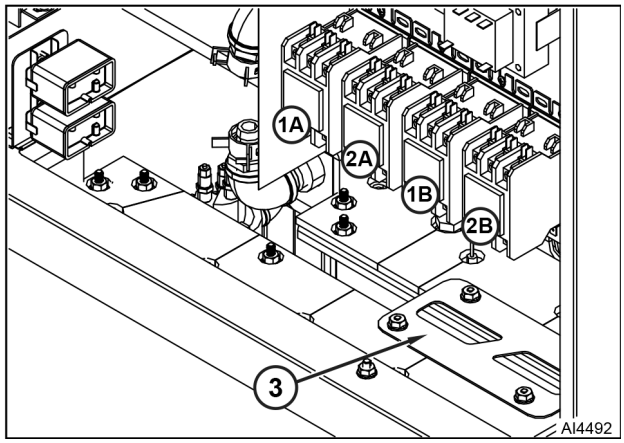

Fig. 23

5. Remove four nuts, washers, and bracket (3) from both steam generators.
6. Right steam generator only:

NOTE: Right steam generator must be moved to provide clearance.

   A. Disconnect steam hose (1, Fig. 24) from generator tank.
   B. Disconnect drain hose (2) from drain box.
   C. Loosen / remove bolts and washers (3) that secure steam generator to mounting brackets.
   D. Move steam generator forward off mounting brackets.

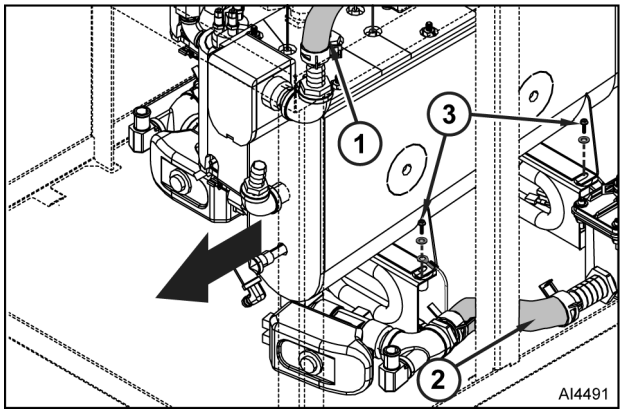

Fig. 24

7. Position high-limit thermostat (1, Fig. 25) capillary tube to facilitate heating element removal. Avoid creating sharp bends or kinks in the capillary tube.
8. Remove nut, lock washers, and flat washers that secure heating element (2) to tank (4).
9. Pull heating element out of steam generator tank.

NOTE: Note mounting position of high-limit bulb.

10. Remove high-limit bulb from heating element.

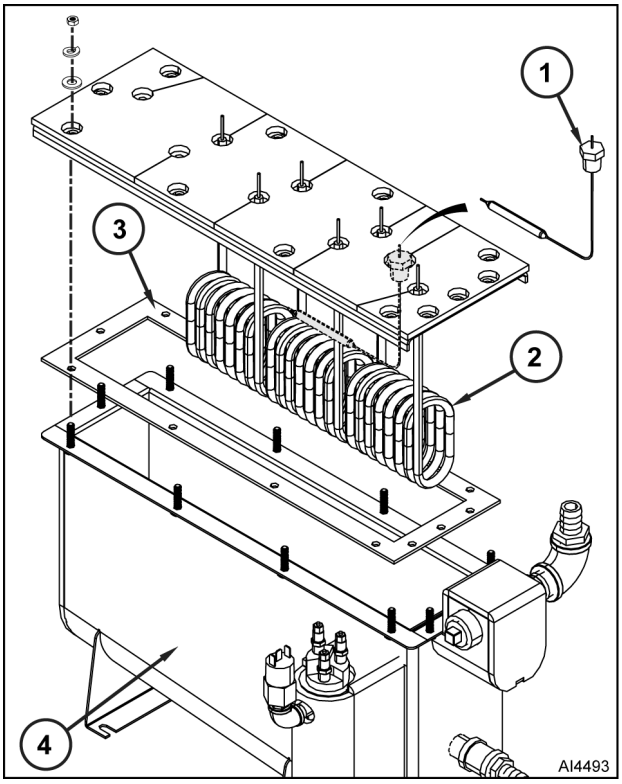

Fig. 25

11. Remove high-limit capillary tube compression fitting then remove high-limit capillary tube and bulb from heating element.
12. Remove gasket (3) from steam generator tank.
13. Clean remaining sealant from top lip of steam generator tank.

NOTICE

Do not reuse hose clamps. Always replace opened / removed hose clamps with new ones.

NOTE: Position capillary bulb so it is centered across heating elements.

NOTE: Apply pipe thread sealant to threads of large capillary tube mounting nut before installing.

NOTE: Pull excess capillary tubing out of heating element. Route capillary tube such that there are no sharp bends or kinks.

NOTE: Right steam generator - make sure ground bond strap is properly installed.

NOTE: Install a new gasket when reassembling steam generator tank. Temporarily secure gasket in place with RTV 109.

NOTE: Tighten heating element screws evenly to 70 in-lbs. Follow tightening sequence pattern as shown in Fig. 26.

14. Reverse procedure to install.

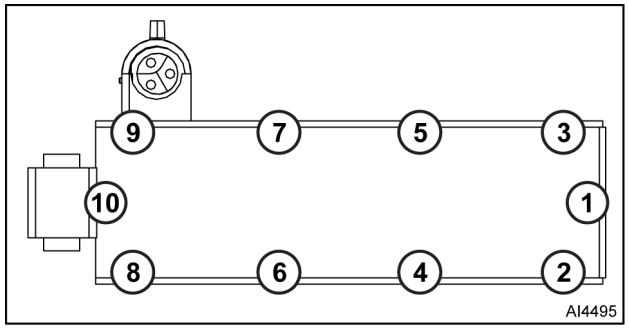

Fig. 26

STEAM GENERATOR TANK



⚠ WARNING

Disconnect the electrical power to the machine and follow lockout / tagout procedures.

NOTE: Replace any defective components when disassembling / replacing steam generator tank.

1. Turn off machine to drain steam generator tank. Allow steamer to complete drain cycle.
2. Turn off water supply.

NOTE: Remove left panel for upper compartment steam generator, right panel for lower compartment steam generator.

3. Remove following covers and panels:
   - BOTTOM FRONT PANEL
   - LEFT SIDE BOTTOM PANEL

     or
   - RIGHT SIDE BOTTOM PANEL
4. Remove four nuts, washers, and bracket (1, Fig. 27) from both steam generators.

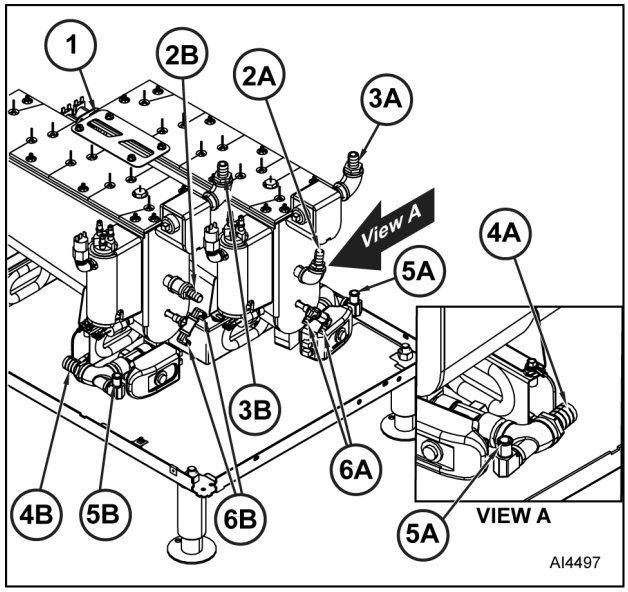

Fig. 27

5. Disconnect following hoses:
    - Delime hose (2A or 2B).
    - Steam hose (3A or 3B).
    - Motorized valve drain hose (4A or 4B).
    - Flush hose (5A or 5B).
    - Fast and slow supply hoses (6A or 6B).
6. Disconnect heating element leads from limiting (1A or 1B, Fig. 28) and regulating contactors (2A or 2B).

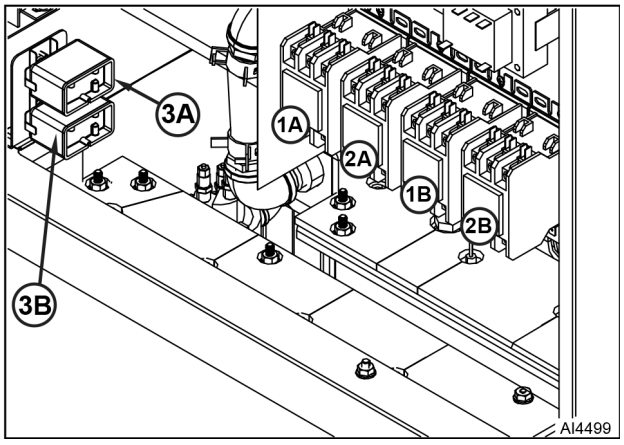

Fig. 28

7. Remove high limit switch (3A or 3B) from mounting bracket.

NOTE: Document all wire / lead connections

8. Disconnect following electrical wires and cables:
    - High pressure limit switch (1A or 1B) leads.
    - Water level probe (2A or 2B) leads.
    - Motorized drain valve (3A or 3B) leads.
    - Hold thermostat (4A or 4B) leads.

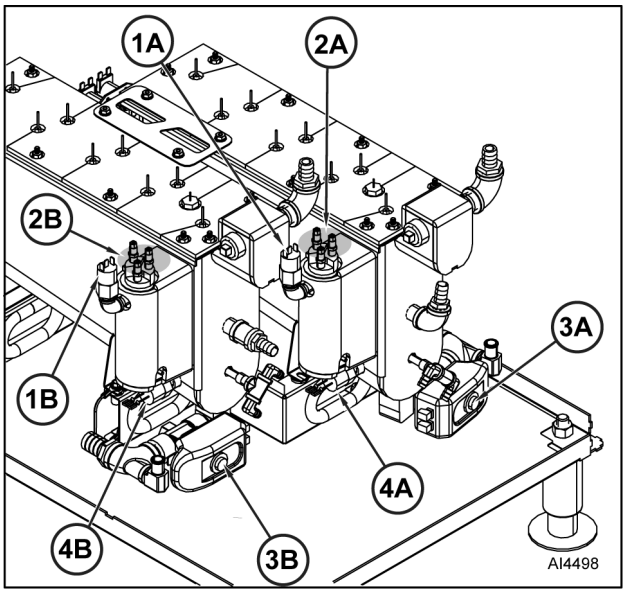

Fig. 29

9. Remove two bolts, washers, and steam generator tank.
10. Remove HEATING ELEMENT.
11. Remove following items from steam generator tank:
    - Water level probes (1, Fig. 30).
    - Steam outlet fitting (2).
    - Delime port fitting (3).
    - Supply port fitting (4).
    - Motorized drain valve assembly (5).
    - Hold thermostat (6).
    - Nipple and cap (7).
    - High pressure limit switch (8).

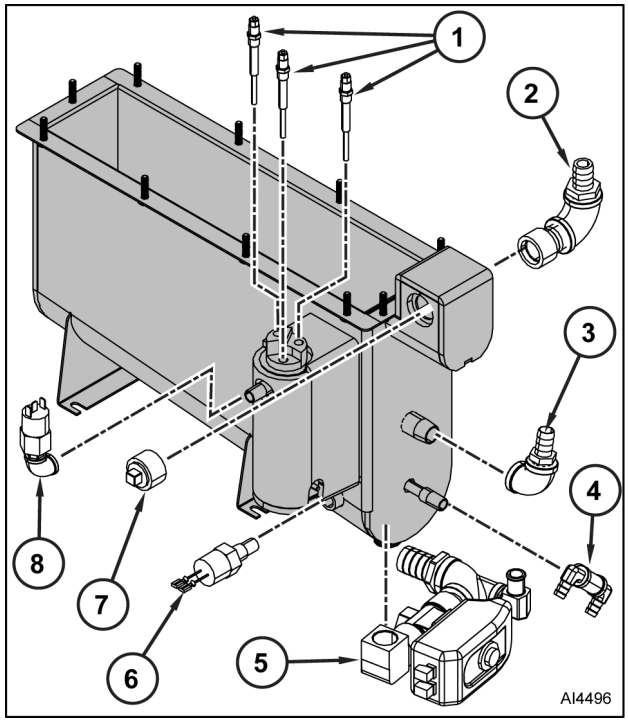

Fig. 30

12. Remove gasket from steam generator tank.

NOTICE

Do not reuse hose clamps. Always replace opened / removed hose clamps with new ones.

NOTE: Temporarily secure gasket in place with RTV 109.

NOTE: Use high temperature aluminum foil tape to secure insulation.

NOTE: Apply thread sealant to all pipe threads connected to steam generator tank.

NOTE: Follow torque requirement / tightening sequence shown in HEATING ELEMENT.

13. Reverse procedure to install.

MOTORIZED DRAIN VALVE (PROFESSIONAL)



⚠ WARNING

Disconnect the electrical power to the machine and follow lockout / tagout procedures.

NOTE: There are two generations of motorized drain valves on ET models. Shown below are 1st Generation (1, Fig. 31), 2nd Generation (2, Fig. 31).

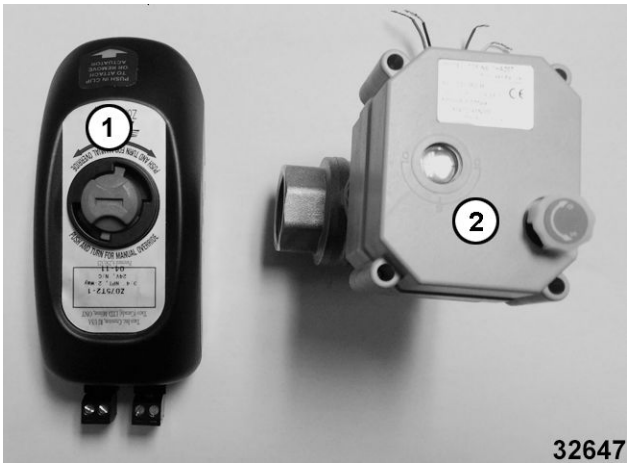

Fig. 31

1. Turn steamer off by using on/off switch on front panel of steamer.
   A. Allow steamer to complete drain cycle.
   B. If motorized drain valve has malfunctioned such that tank will not drain normally, refer to Drain Tank Manually for draining procedure.

Drain Tank Manually

1. Turn off water supply to steamer.
2. Disconnect power to steamer, allow enough time for water in steam generator tank to cool to 140°F before attempting to manually open drain valve.
3. Remove BOTTOM FRONT PANEL.
4. Locate the motorized drain valve (1, Fig. 32) found at lower right side of steam generator tank.

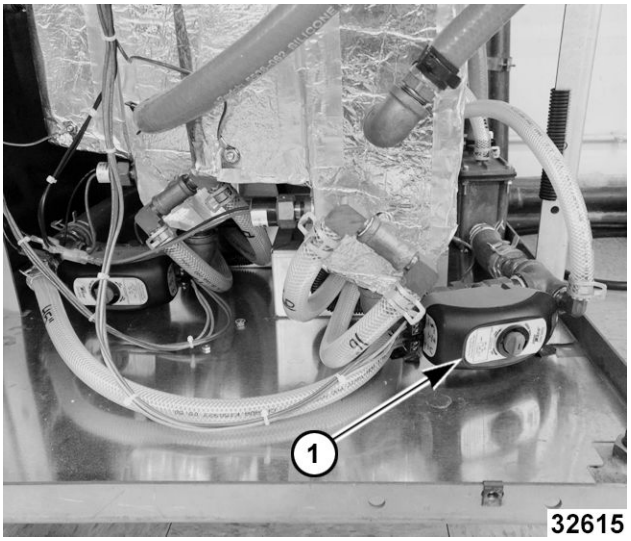

Fig. 32

5. Perform valve manual override.

1st GENERATION

A. Push in and turn knob 90° counterclockwise to open (Fig. 33).

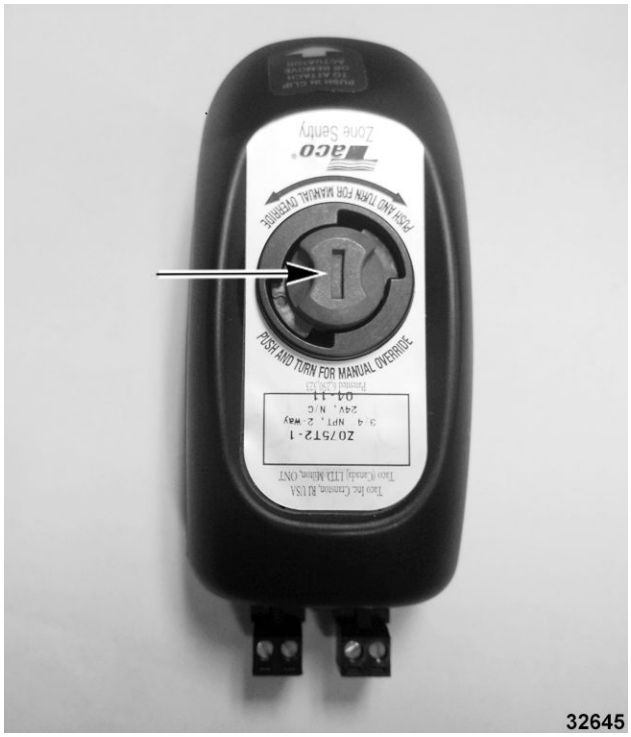

Fig. 33

B. Return manual drain override knob to the closed position (Fig. 34) 90° clockwise (slot in horizontal position).



Fig. 34

2nd GENERATION

A. Pull knob (1, Fig. 35) out and turn while watching indicator window. Verify red line inside indicator window (2, Fig. 35) is vertical (closed position) with valve body.

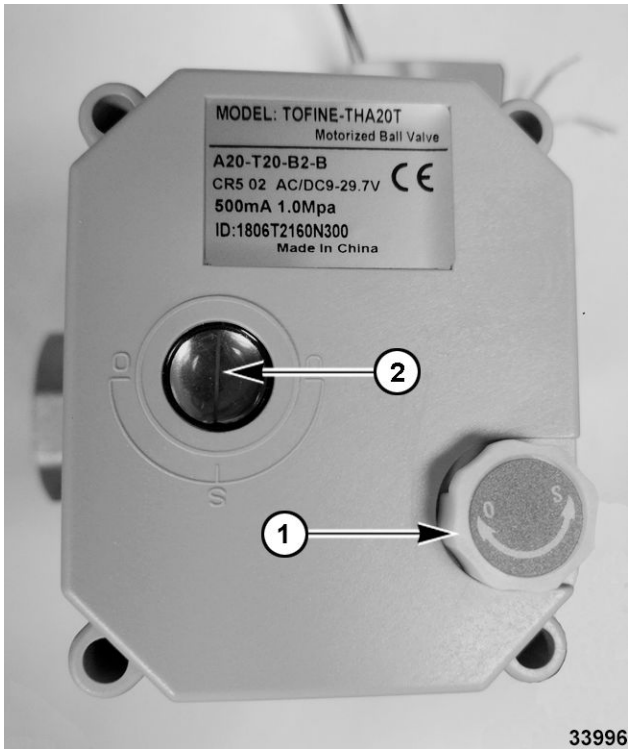

Fig. 35

B. Pull knob (1, Fig. 36) out and turn while watching indicator window. Verify red line inside indicator window (2, Fig. 36) is horizontal (open position) with valve body.

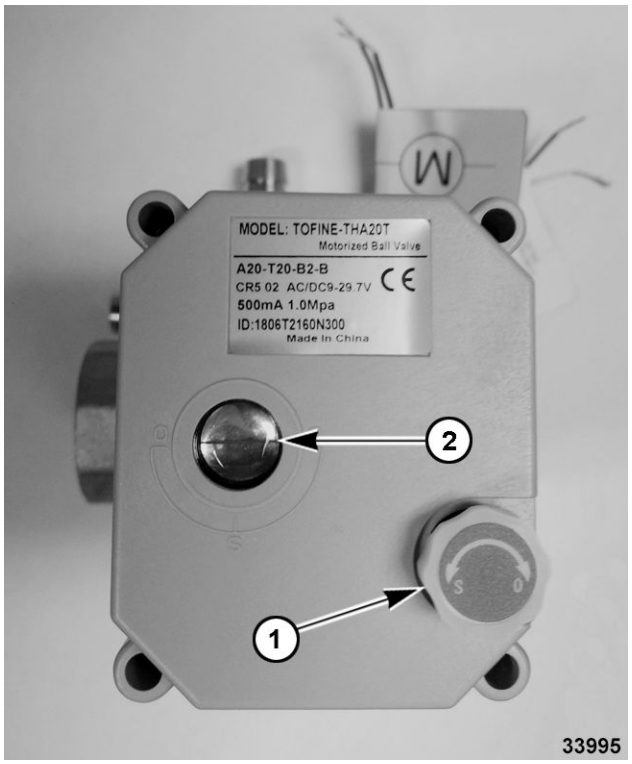

Fig. 36

Removal

1. Turn off water supply to steamer.
2. Remove BOTTOM FRONT PANEL.
3. Remove the motorized control assembly.

1st GENERATION

- Press and hold spring catch (1, Fig. 37) then life motorized control assembly (2, Fig. 37) off valve body (3, Fig. 37).

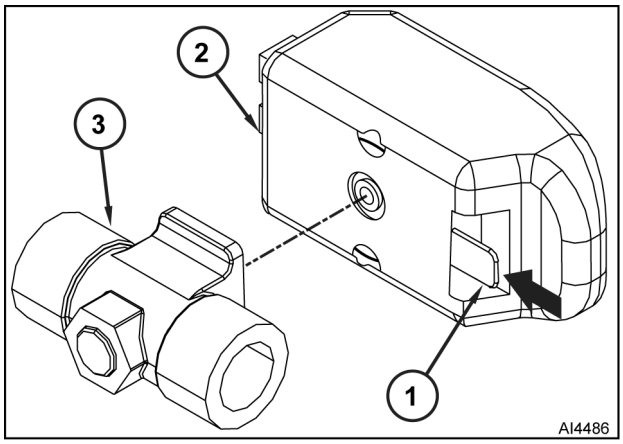

Fig. 37

2nd GENERATION

- Remove 2.5mm screws (Fig. 38).

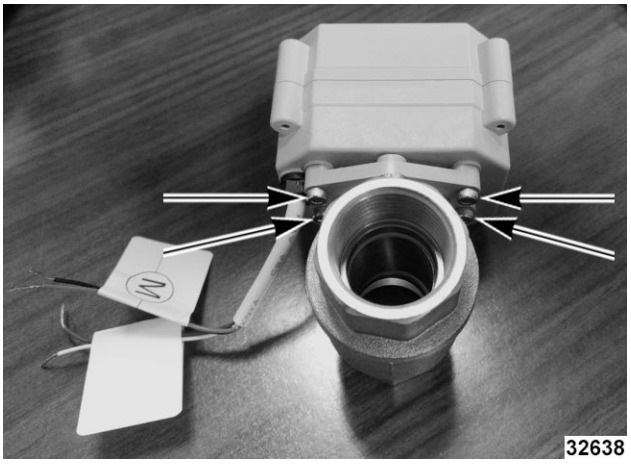

Fig. 38

NOTE: 1st generation has an electrical plug and 2nd generation is hard wired. If electrical wiring is not connected correctly, the motorized drain valve will not function.

4. Note location of electrical connections then disconnect electrical wiring from motorized control assembly.
5. Disconnect the drain and drain flush hoses from the Tee located below the drain valve.
6. Remove drain valve body from steam generator tank.

7. Separate tee and nipple from the drain valve body.
8. Reassemble parts removed in reverse order. Apply liquid pipe thread sealant to threads of plumbing connections.

NOTE: If motorized drain valve is in the open position when power is applied to the steamer with the power switch on, drain valve will not close and fill water will flow through the generator into the drain.

9. Verify On/Off switch is in off position and motorized drain valve is closed before applying power to steamer.

NOTE: When power is applied and power switch is off steamer will enter a drain cycle.

10. Check steamer for proper operation and leaks around drain valve.

SUPER-HEATER ELEMENT

NOTE: Super-heaters are installed only on Professional models.

1. Turn off machine to drain steam generator tank. Allow steamer to complete drain cycle.
2. Turn off water supply.
3. Remove the following covers and panels.
   - RIGHT SIDE TOP PANEL
   - RIGHT SIDE BOTTOM PANEL
   - BOTTOM FRONT PANEL

NOTE: Document wire connections.

4. Remove super-heater electrical wires from electrical panel.
5. Remove cable ties that secure super-heater electrical wires in place.
6. Remove / peel back insulation from super-heater head.
7. Remove super-heater element from pipe (Fig. 39).

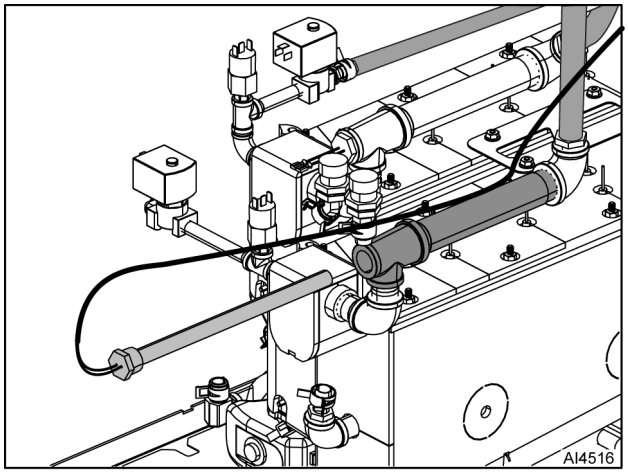

Fig. 39

NOTICE

Do not reuse hose clamps. Always replace opened / removed hose clamps with new ones.

NOTE: Apply pipe thread sealant to threads of super-heater element before assembly.

NOTE: Tape insulation around head of super-heater element using high-temperature aluminum foil tape.

NOTE: Make sure insulated piping assembly is horizontal or super-heater element head end of assembly is slightly elevated.

8. Reverse procedure to install.

HOLD THERMOSTAT



⚠ WARNING

Disconnect the electrical power to the machine and follow lockout / tagout procedures.

1. Turn off machine to drain steam generator tank. Allow steamer to complete drain cycle.
2. Remove BOTTOM FRONT PANEL.

NOTE: Document wire connections.

3. Disconnect electrical lead wires from hold thermostat.
4. Remove hold thermostat from steam generator tank.

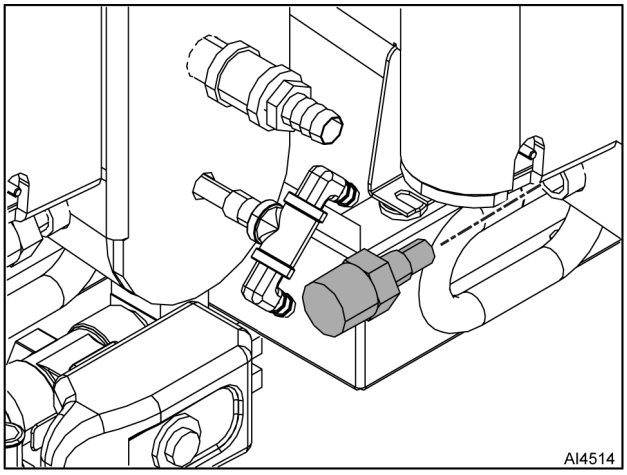

Fig. 40

NOTE: Apply Loctite 565 to hold thermostat threads before installing.

5. Reverse procedure to install.

HIGH LIMIT THERMOSTAT



⚠ WARNING

Disconnect the electrical power to the machine and follow lockout / tagout procedures.

1. Turn off machine to drain steam generator tank. Allow steamer to complete drain cycle.
2. Turn off water supply.

NOTE: High limit thermostat bulb and capillary tube are removed from heating element in HEATING ELEMENT procedure.

3. Remove HEATING ELEMENT.

NOTE: Document wire connections.

4. Disconnect electrical wiring from high-limit thermostat (1 or 2, Fig. 41).

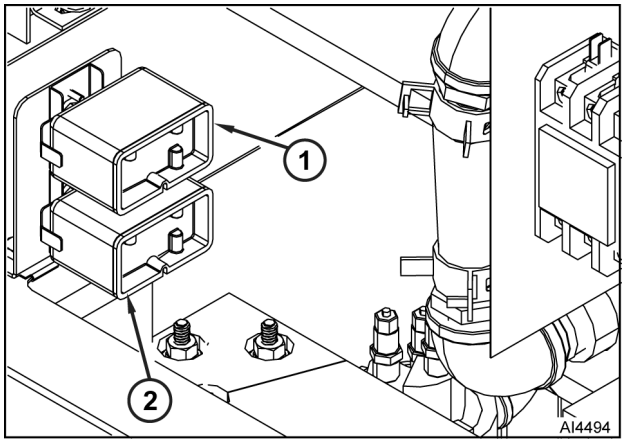

Fig. 41

5. Remove high-limit thermostat from mounting bracket.
6. Reverse procedure to install.

WATER LEVEL PROBES



⚠ WARNING

Disconnect the electrical power to the machine and follow lockout / tagout procedures.

NOTE: Remove left panel for upper compartment steam generator, front panel for lower compartment steam generator.

1. Remove LEFT SIDE BOTTOM PANEL or BOTTOM FRONT PANEL.

NOTE: Document wire connections.

2. Remove nut(s) and lead(s) from probe(s).
3. Remove water level probe(s)
   - High Level (1, Fig. 42).
   - Low Level (2) and / or
   - Low Level Cut Off (3).

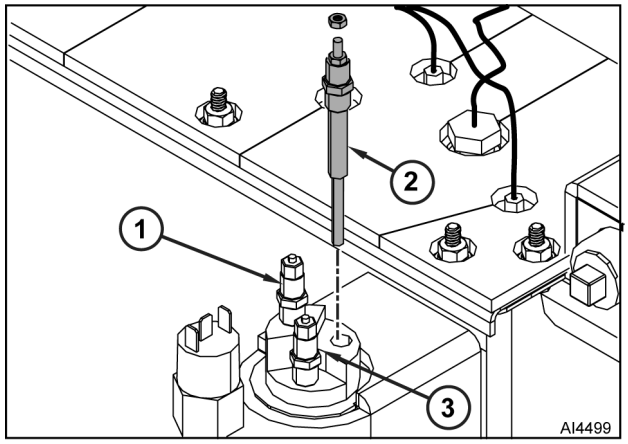

Fig. 42

NOTICE

Do not use anything abrasive on insulators.

4. Use a soft cloth to remove all accumulated deposits from probe insulator.

NOTE: If probes are dirty, delime steam generator tank after assembling.

NOTE: Apply pipe sealant to probe threads

5. Reverse procedure to install.

WATER LEVEL PROBE ELECTRICAL CONNECTIONS			
Item Number	**Water Level Controller**	**Wiring**	**Water Level Probe**
1	H	#5A	HL - High Level Probe
2	L	#6B	LL - Low Level Probe
3	LLCO	#7C	LLCO - Low Level Cut Off
4	G	#8	Ground

SENSOR PROBE



⚠ WARNING

Disconnect the electrical power to the machine and follow lockout / tagout procedures.

NOTE: Sensor probes are installed only on LWE models.

1. Remove TOP REAR PANEL.

NOTE: Document wire connections.

2. Disconnect sensor probe (1, Fig. 43 wires from PID controller (2) leads.
3. Remove sensor probe (1) from sensor tube.
4. Reverse procedure to install.

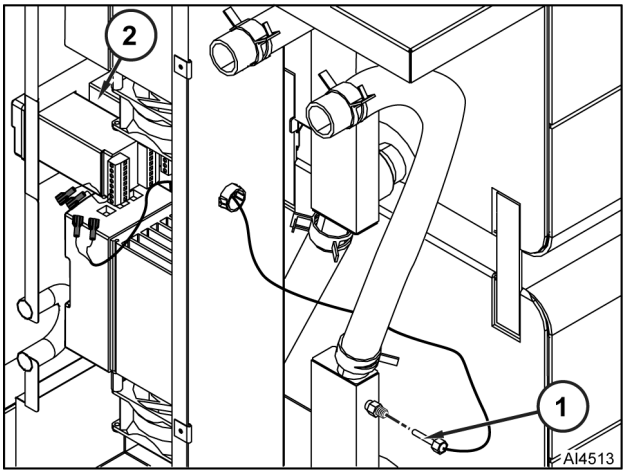

Fig. 43

UPPER COOKING COMPARTMENT



⚠ WARNING

Disconnect the electrical power to the machine and follow lockout / tagout procedures.

NOTE: Cooking compartment and front panel are constructed as an assembly and cannot be separated.

1. Turn off machine to drain steam generator tank. Allow steamer to complete drain cycle.
2. Turn off water supply.
3. Remove following covers and panel.
   - RIGHT SIDE TOP PANEL
   - LEFT SIDE TOP PANEL
   - TOP COVER
   - TOP REAR PANEL

NOTE: Remove cabinet door actuator bracket and buzzer as an assembly. No further disassembly required.

NOTE: Document all wire connections.

4. Remove following components:
   - DOOR
   - TIMER
   - INDICATOR LIGHT ASSEMBLY
   - ON/OFF SWITCH

- BUZZER

5. Remove bolts (4, Fig. 44) and nuts that secure cooking compartment front panel to lower cooking compartment.
6. Remove lower hinge (3) from front panel.
7. Remove vacuum breaker (2).
8. Disconnect steam hose from cooking compartment steam port inlet fitting.

NOTE: Retain steam port inlet fitting for reuse.

9. Remove steam port inlet fitting (1).

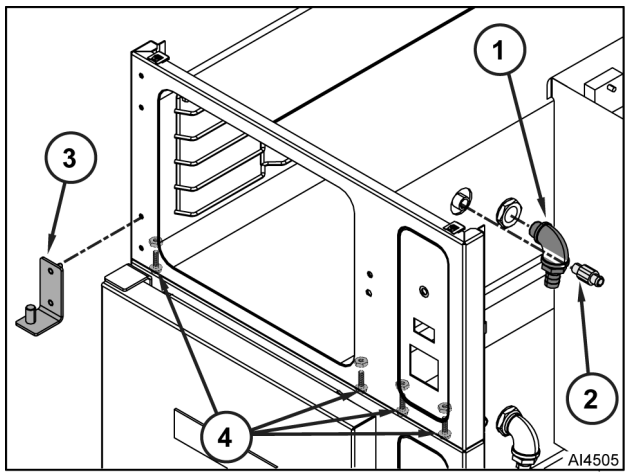

Fig. 44

10. **Basic and Professional Models:** Disconnect compartment drain hose from rear of cooking compartment.
11. **LWE Models:**
    A. Remove SENSOR PROBE.
    B. Remove sensor probe fitting (1, Fig. 45) from vent weldment (5).
    C. Remove vent hose (4) from vent weldment (5).
12. Remove cable clamp and drain hose from bottom of vent weldment (5).
13. Remove mounting nuts that secure cooking compartment (2) to vertical mounting brackets (3).
14. Remove cooking compartment assembly from steamer.
15. Remove vent weldment (5) cooking compartment (2).

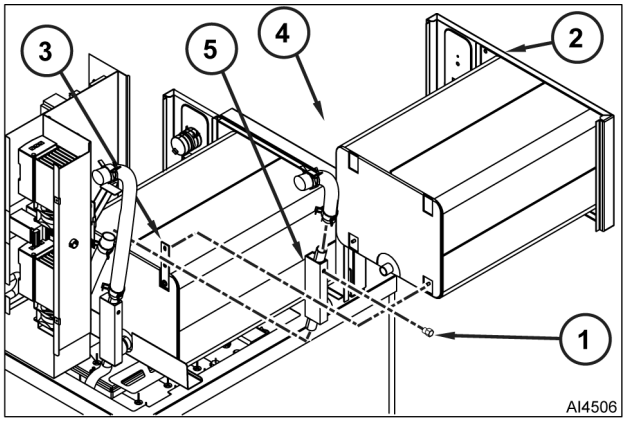

Fig. 45

NOTICE

Do not reuse hose clamps. Always replace opened / removed hose clamps with new ones.

NOTE: Perform DOOR LATCH ADJUSTMENT.

16. Reverse procedure to install.

LOWER COOKING COMPARTMENT



⚠ WARNING

Disconnect the electrical power to the machine and follow lockout / tagout procedures.

NOTE: Cooking compartment and front panel are constructed as an assembly and cannot be separated.

1. Turn off machine to drain steam generator tank. Allow steamer to complete drain cycle.
2. Turn off water supply.
3. Remove following covers and panels.
   - RIGHT SIDE TOP PANEL
   - LEFT SIDE TOP PANEL
   - TOP COVER.
   - TOP REAR PANEL
   - BOTTOM FRONT PANEL
4. Remove upper cooking compartment as follows:
   A. Note connections and disconnect following components from wire harnesses:
      - Timer
      - ON/OFF Switch
      - Indicator Lights

- Buzzer
- Door Switch

B. Remove four bolts nuts (1, Fig. 46) that secure upper and lower cooking compartment front panels.

C. Disconnect steam supply hose (2) from steam fitting.

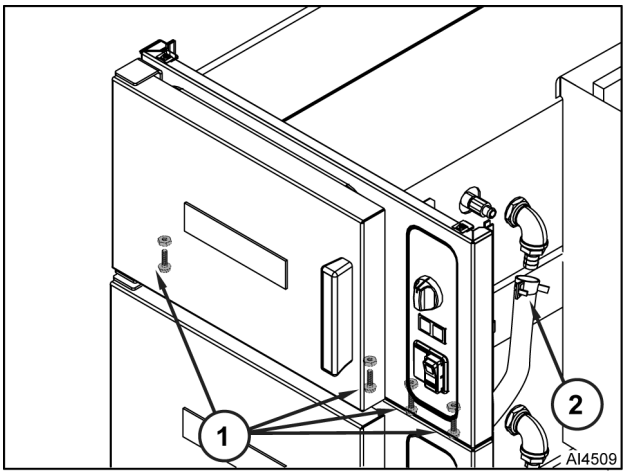

Fig. 46

D. Remove SENSOR PROBE.

E. Disconnect drain hose from vent weldment.

F. Remove nuts that secure upper cooking compartment (1, Fig. 47) to vertical brackets (2).

G. Remove upper cooking compartment from steamer.

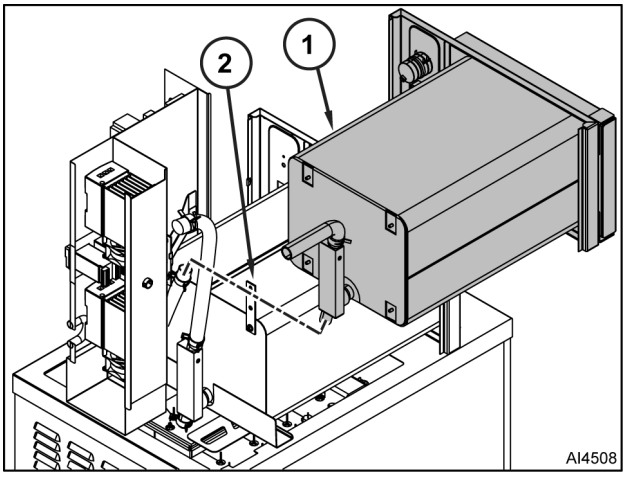

Fig. 47

NOTE: Remove cabinet door actuator bracket and buzzer as an assembly. No further disassembly required.

NOTE: Document all wire connections.

5. Remove following components:
   - DOOR
   - TIMER
   - INDICATOR LIGHT ASSEMBLY
   - ON/OFF SWITCH
   - BUZZER
6. Remove lower hinge (3, Fig. 48) from front panel.
7. Remove bolts / nuts (4) and screws (5) that secure cooking compartment front panel to frame.
8. Remove vacuum breaker (2).
9. Disconnect steam hose from cooking compartment steam port inlet fitting.
10. Remove steam port inlet fitting (1).

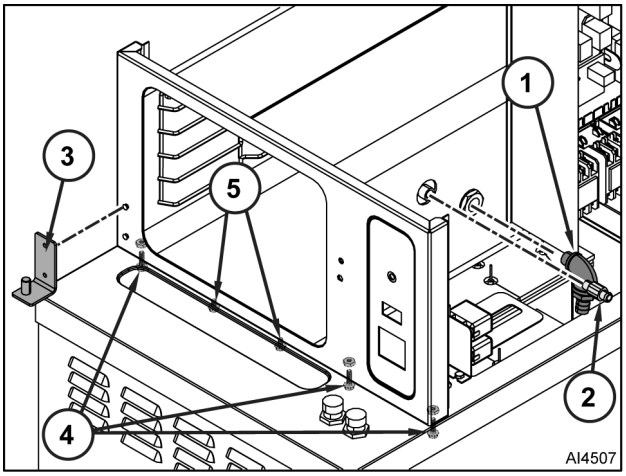

Fig. 48

11. **Basic and Professional Models:** Disconnect compartment drain hose from rear of cooking compartment.
12. **LWE Models:**
    A. Remove SENSOR PROBE.
    B. Remove vent hose (1, Fig. 49) from vent weldment (2).
    C. Remove drain hose (3) from bottom of vent weldment (2).
13. Remove nuts that secure cooking compartment to cross frame (4).
14. Remove nuts that secure cooking compartment to bracket (5).
15. Remove cooking compartment assembly from steamer.

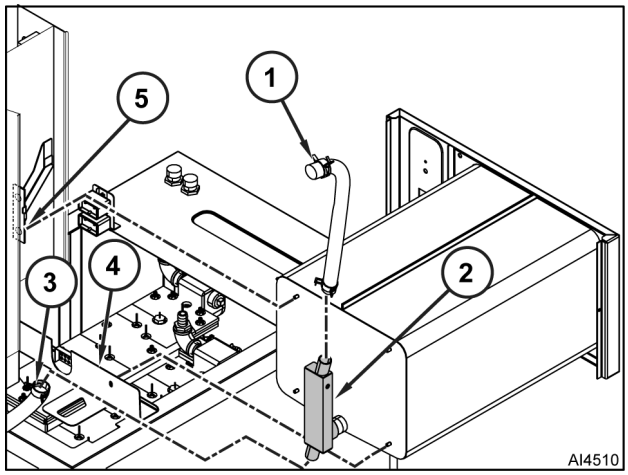

Fig. 49

16. LWE Models Only:
    A. Remove sensor probe fitting (1, Fig. 50) from vent weldment (2).
    B. Remove vent weldment (2) cooking compartment (3).

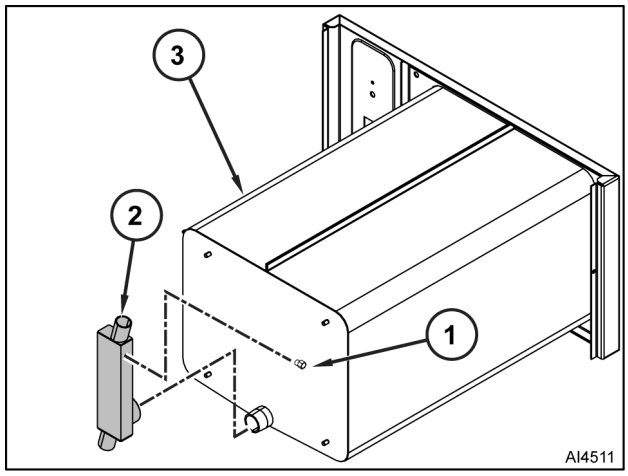

Fig. 50

NOTICE

Do not reuse hose clamps. Always replace opened / removed hose clamps with new ones.

NOTE: Perform DOOR LATCH ADJUSTMENT.

17. Reverse procedure to install.

PRESSURE SWITCH



⚠ WARNING

Disconnect the electrical power to the machine and follow lockout / tagout procedures.

1. Turn off machine to drain steam generator tank. Allow steamer to complete drain cycle.
2. Turn off water supply.
3. Remove LEFT SIDE BOTTOM PANEL and BOTTOM FRONT PANEL.

NOTE: Document wire connections.

4. Disconnect electrical wiring from pressure switch.
5. Remove pressure switch (Fig. 51) from piping.

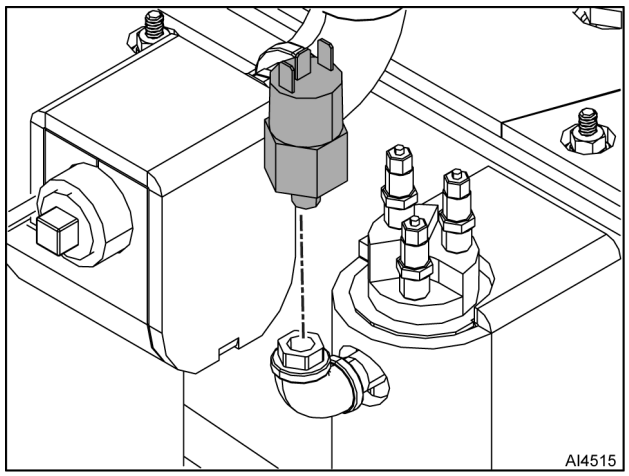

Fig. 51

NOTE: Apply pipe thread sealant to pressure switch threads.

NOTE: Replacement component is an adjustable pressure switch (Fig. 52).

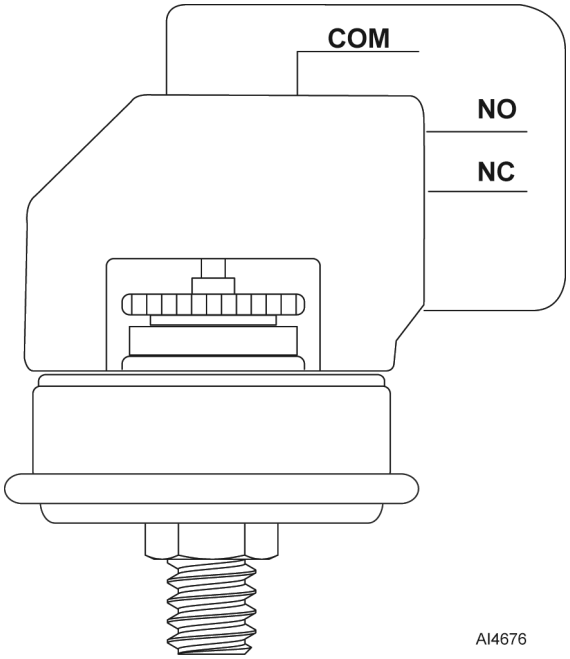

Fig. 52

6. Reverse procedure to install.
7. Perform PRESSURE SWITCH CHECK / ADJUST.

VACUUM RELIEF VALVE



⚠ WARNING

Disconnect the electrical power to the machine and follow lockout / tagout procedures.

1. Turn off machine to drain steam generator tank. Allow steamer to complete drain cycle.
2. Turn off water supply.
3. Remove LEFT SIDE BOTTOM PANEL.

NOTE: Document wire connections.

4. Disconnect electrical wiring from vacuum relief valve.
5. Remove hose clamp (Fig. 53) and hose from vacuum relief valve elbow.

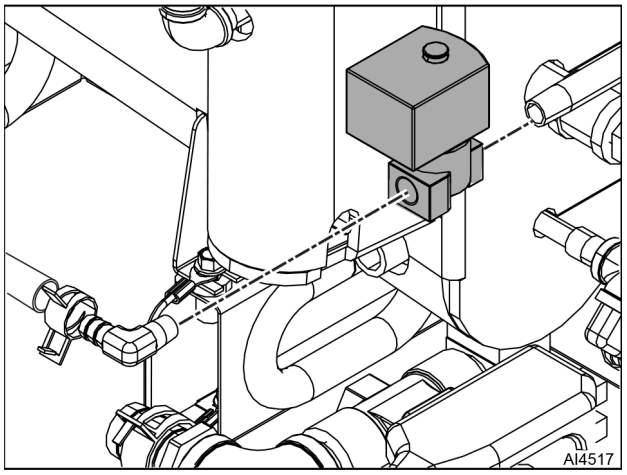

Fig. 53

6. Unthread vacuum relief valve from piping.
7. Unthread elbow fitting from vacuum relief valve.

NOTE: Apply pipe sealant to all pipe threads.

8. Reverse procedure to install.

FILL VALVES



⚠ WARNING

Disconnect the electrical power to the machine and follow lockout / tagout procedures.

NOTICE

Unfiltered and filtered valve assemblies have different flow rates and must not be interchanged.

NOTE: Filtered and non-filtered water solenoid valves are constructed as dual water valve assemblies. To differentiate between fast and slow fill outlets, hold dual water valve assembly with inlet up and outlets facing forward. Fast flow outlet is on left and slow flow outlet is on right.

1. Turn off machine to drain steam generator tank. Allow steamer to complete drain cycle.
2. Turn off water supply.
3. Disconnect incoming filtered water hose to machine.
4. Disconnect incoming unfiltered water hose to machine.
5. Remove BOTTOM REAR PANEL.

NOTE: Document wire connections.

6. Disconnect valve wires.
7. Disconnect hoses from solenoid valve (Fig. 54).

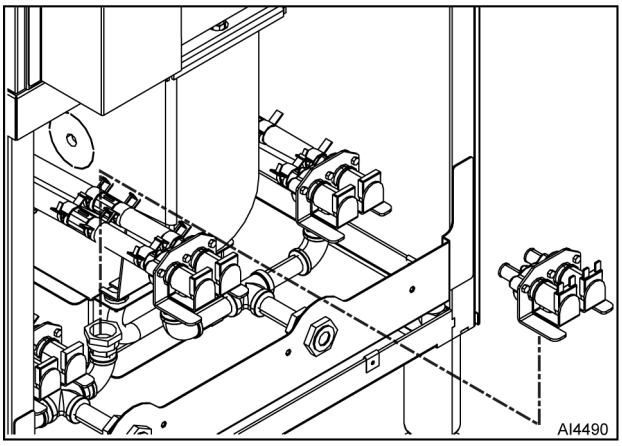

Fig. 54

8. Unthread solenoid valve.

NOTICE

Do not reuse hose clamps. Always replace opened / removed hose clamps with new ones.

9. Reverse procedure to install.

ELECTRONIC COMPONENT



⚠ WARNING

Disconnect the electrical power to the machine and follow lockout / tagout procedures.

NOTICE

Certain components in this system are subject to damage by electrostatic discharge (ESD) during field repairs. An ESD kit is required to prevent damage. The ESD kit must be used anytime the circuit board is handled.

NOTE: This procedure should be used for replacement of electrical / electronic components. Refer to COMPONENT LOCATION for location information.

1. Remove RIGHT SIDE TOP PANEL.

NOTE: Document wire connections.

2. Disconnect wires from component to be replaced.
3. Remove fasteners and component.
4. Reverse procedure to install.

PID CONTROLLER



⚠ WARNING

Disconnect the electrical power to the machine and follow lockout / tagout procedures.

NOTE: PID controllers are installed only on LWE models.

1. Remove RIGHT SIDE TOP PANEL.
2. Remove screws and PID mounting bracket (1, Fig. 55) from electrical panel

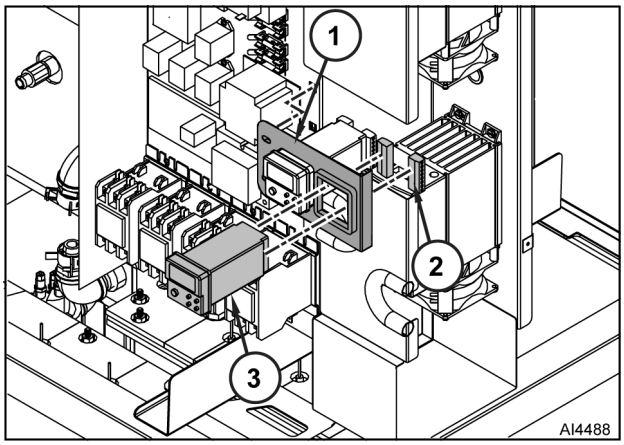

Fig. 55

NOTE: Document connection locations.

3. Remove two electrical plugs (2) from rear of PID controller (3).
4. Pull PID mounting bracket away from electrical panel to access PID controller.
5. Remove PID controller:

NOTE: Use a 1.5" putty knife or equivalent thin tool underneath each locking tab (2, Fig. 56) to hold teeth away from ridges.

6. Slide mounting collar away from mounting bracket.
7. Slide mounting collar off PID controller (1).
8. Remove PID controller from panel.

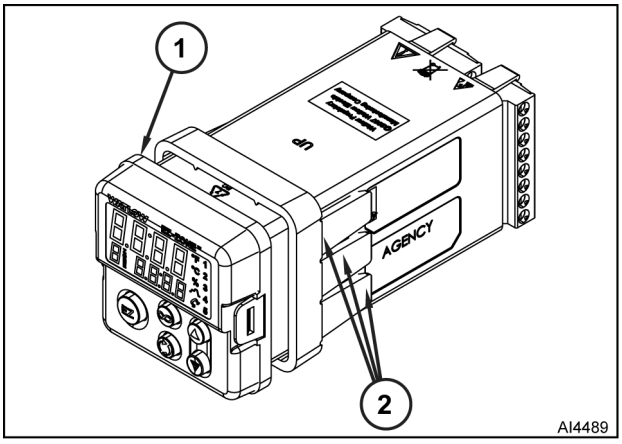

Fig. 56

NOTE: Insert PID controller into panel opening, slide mounting collar over controller, and push it up against mounting bracket to engage locking tabs.

9. Reverse procedure to install.
10. Perform PID CONTROLLER TEST - LWE MODEL.

SOLID STATE CONTACTOR



⚠ WARNING

Disconnect the electrical power to the machine and follow lockout / tagout procedures.

NOTE: Solid state contactors are installed only on LWE models.

1. Remove RIGHT SIDE TOP PANEL.
2. Remove two screws and internal panel (1, Fig. 57).

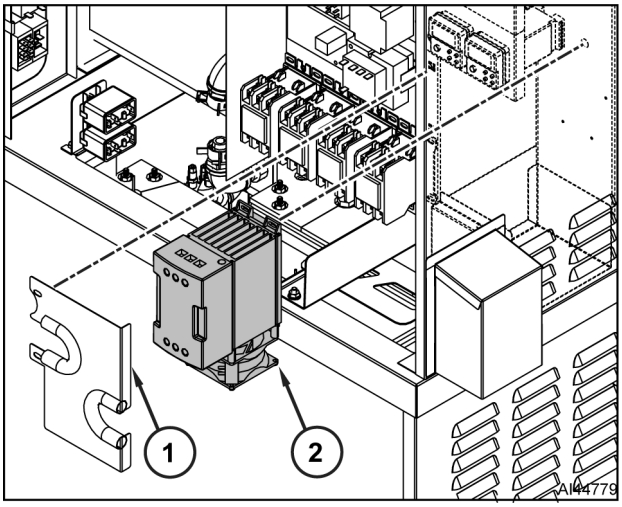

Fig. 57

NOTE: Document wire connections.

3. Disconnect wires from solid state contactor (2).
4. Remove four screws and solid state contactor from mounting plate.
5. Reverse procedure to install.

ON/OFF SWITCH



⚠ WARNING

Disconnect the electrical power to the machine and follow lockout / tagout procedures.

1. Remove RIGHT SIDE TOP PANEL.
2. Disconnect electrical plug from on/off switch.
3. Remove on/off switch (Fig. 58) from front panel.

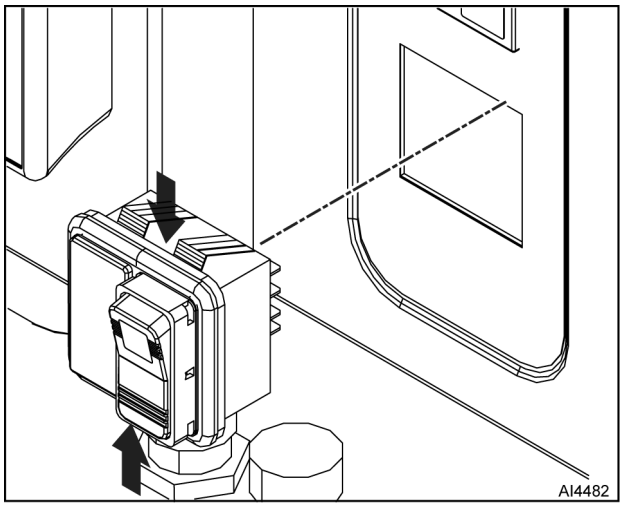

Fig. 58

4. Reverse procedure to install.

INDICATOR LIGHT ASSEMBLY



⚠ WARNING

Disconnect the electrical power to the machine and follow lockout / tagout procedures.

1. Remove RIGHT SIDE TOP PANEL.
2. Disconnect electrical plug from indicator light assembly.
3. Remove indicator light assembly (Fig. 59) from front panel.

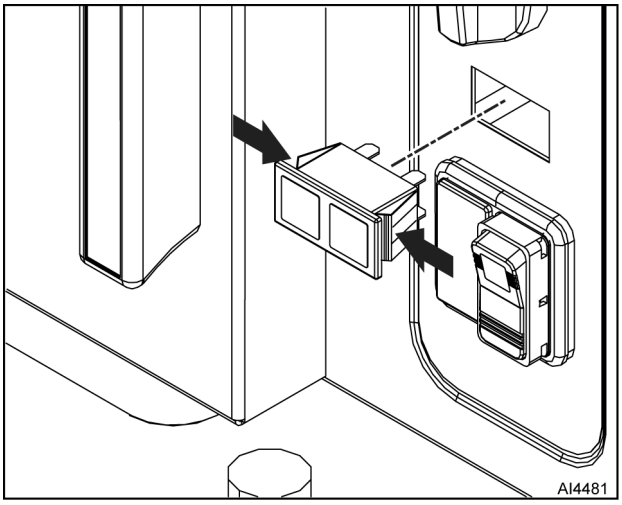

Fig. 59

4. Reverse procedure to install.

DOOR SWITCH



⚠ WARNING

Disconnect the electrical power to the machine and follow lockout / tagout procedures.

1. Remove RIGHT SIDE TOP PANEL.
2. Open cooking compartment door.

NOTE: Document wire connections.

3. Disconnect wiring from switch (1, Fig. 60).

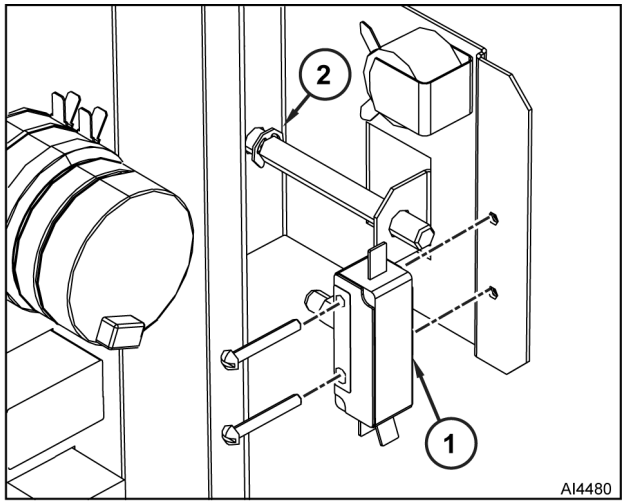

Fig. 60

4. Remove switch from door switch mounting bracket. Retain hardware.

NOTE: Verify E-clip (2) is installed on door switch linkage in groove nearest front panel (if two grooves in linkage are present).

NOTE: Position switch as far forward as possible then tighten two screws.

5. Reverse procedure to install.

TIMER



⚠ WARNING

Disconnect the electrical power to the machine and follow lockout / tagout procedures.

NOTE: When timer reaches zero, an external buzzer will sound and steam will stop entering cooking compartment. The steamer has extra components to utilize the constant steam setting allowing the steamer to operate continuously.

1. Remove RIGHT SIDE TOP PANEL.

NOTE: Document wire connections.

2. Disconnect timer wires.
3. Pull knob (Fig. 61) from timer shaft.

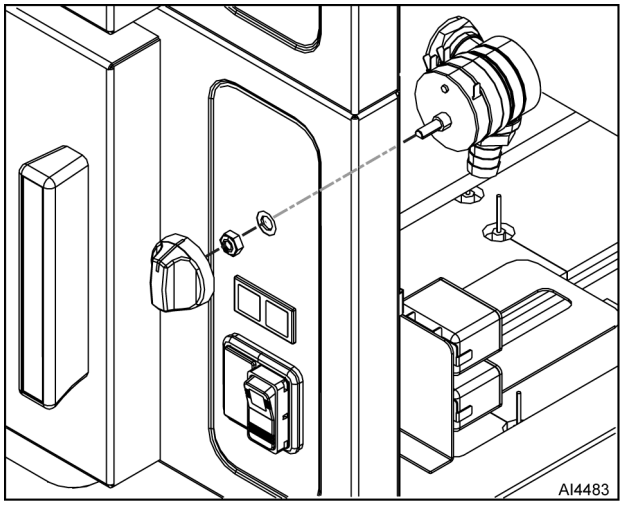

Fig. 61

NOTE: Inspect rotary shaft seal. Replace if damaged, worn or signs of moisture migration into control area around timer shaft is evident.

4. Remove rotary shaft seal from timer shaft
5. Remove nut and timer from front panel.

NOTE: Apply a small amount of Petrogel under rotary shaft seal.

6. Reverse procedure to install.

BUZZER

1. Remove RIGHT SIDE TOP PANEL.

NOTE: Document wire connections

2. Disconnect electrical wiring from the buzzer and door switch.
3. Remove nut, washer, and door striker (Fig. 62).

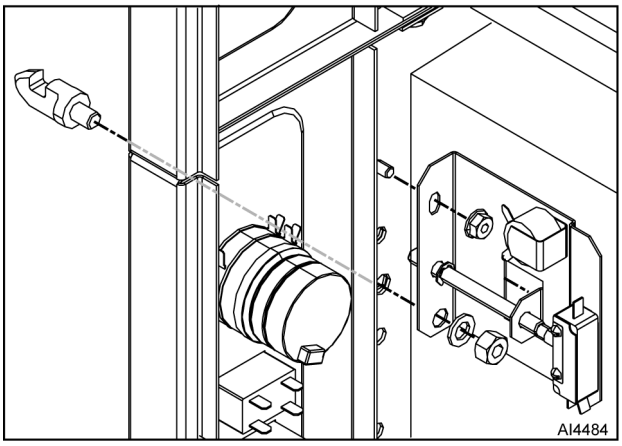

Fig. 62

4. Remove nut and cabinet door actuator bracket.
5. Remove fastener and buzzer from cabinet door actuator bracket (Fig. 63).

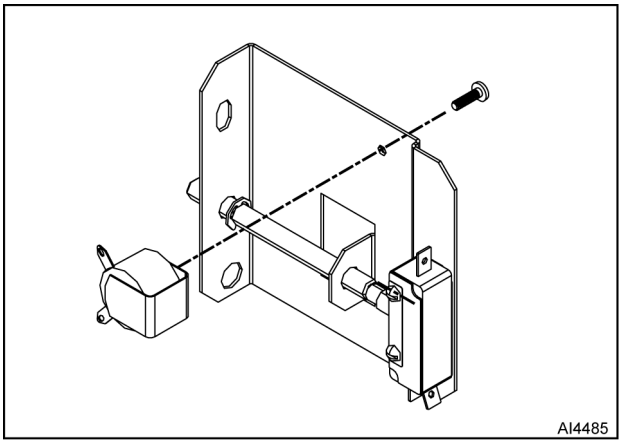

Fig. 63

6. Reverse procedure to install.

SERVICE PROCEDURES AND ADJUSTMENTS

DOOR LATCH ADJUSTMENT

NOTICE

Should steamer door jam and cannot be opened, DO NOT FORCE OR PRY door as damage will occur.

JAMMED DOOR

1. Lift up on bottom of door at handle end to disengage latch.
   A. If door does not open, remove RIGHT SIDE TOP PANEL.

NOTE: Loosening nut should release striker from latch.

   B. Locate striker and loosen / remove nut.
   C. Open door.
2. Remove striker.
3. Remove any burrs on striker that may cause latch to stick.
4. Reinstall striker with slotted side up.
5. Snug striker nut.
6. Apply Loctite 271 to striker threads.
7. Perform DOOR LATCH ADJUSTMENT.

Door Adjustment

1. Reinstall striker with slot pointing upward and hand tighten nut only.
2. Close door to center striker in front panel mounting hole.
3. Open door and check striker slot for horizontal alignment. The slot on striker must be kept horizontal in order for door latch to catch properly and latch.

NOTE: Do not over-tighten nut. If over-tightened, striker may turn and change alignment.

NOTE: If door does not open easily, add shims between striker and cabinet front. When adding shims make certain that door gasket seals properly and steamer does not leak. Remove shims as necessary until leaking stops.

4. Once proper slot alignment has been set, hold striker close to its base then tighten the striker nut. Be careful not to damage striker slot when tightening or door may not latch properly.

HEATING ELEMENT DIAGNOSTIC CHECK - LWE MODELS



⚠ WARNING

Certain procedures in this section require electrical test or measurements while power is applied to the machine. Exercise extreme caution at all times and follow Arc Flash procedures. If test points are not easily accessible, disconnect power and follow Lockout/Tagout procedures, attach test equipment and reapply power to test.

1. Check voltage across heating element wires at limiting (1/4CON) and regulating (2/5CON) contactor load terminals and verify against data plate voltage as outlined in steps below. See WIRING DIAGRAMS for connections.
   A. Voltage should be measured after PID controller has energized solid state contactor (3/6CON) during initial heat up (longest ON time); or during temperature recovery after door has been opened to allow cooking compartment to cool down then closed (timer must be on).
   B. When temperature in the sensor tube (vent) reaches approximately 180°F, the PID controller will signal the solid state contactor (3/6CON) to begin pulsing power to the heating elements to reduce energy use. If voltage is measured during the pulsing state, the meter readings will not be steady for a good reading.
2. If voltage is correct, check current draw Step 3. If voltage is not correct, check:
   A. Voltage supply to steamer at terminal block.
   B. Fuses or breakers blown.
   C. Power to contactor coils (limiting 1/4CON) (regulating 2/5CON).
   D. Limiting (1/4CON) or regulating (2/5CON) contactors not pulling in (mechanical failure).

E. Solid state contactor (3/6CON) not energized by PID controller to provide power to the load contacts on regulating contactor (2/5CON).

1) Perform PID CONTROLLER TEST - LWE MODEL.

2) Check control signal wiring between PID controller and solid state contactor (3/6CON);

3) Check ground wire is connected to solid state contactor (3/6CON). See WIRING DIAGRAMS for connections.

NOTE: LED will be constantly lit during initial heat up and temperature recovery after door has been opened to allow cooking compartment cool down then closed (timer must be on and door closed). LED will blink to indicate solid state contactor (3/6CON) is pulsing power to the load contacts on regulating contactor (2/5CON).

4) Verify LED (green) on solid state contactor (3/6CON) is lit during heating.

NOTE: 208V: four elements used. **240V**: three elements used. **480V**: machines are connected in Wye configuration for 277V across each element.

3. Use a clamp on ammeter to check current draw (amps) through heating element lead wires. Compare them to values listed in table below.

A. Full load amps should be measured when PID controller has energized solid state contactor (3/6CON) during initial heat up (longest ON time); or during temperature recovery after door has been opened to allow cooking compartment cool down then closed (timer must be on).

B. When temperature in the sensor tube (vent) reaches approximately 180°F, the PID controller will signal the solid state contactor (3/6CON) to begin pulsing power to the heating elements to reduce energy use. If current draw is measured during the pulsing state, the meter readings will not be steady for a good reading.

4. If current is correct, then heating element is ok. If current is not correct, check element resistance.

A. Disconnect power to machine.

B. Remove one lead wire of each heating element from the regulating contactor (2/5CON) (T1/4, T2/5, T3/6).

NOTE: See WIRING DIAGRAMS for connections.

C. Use a VOM to check individual element resistance between heating element lead wire and load terminal on limiting contactor (1/3CON).

D. Compare resistance readings to the values in table below.

NOTE: Values in table are nominal. Tolerance is ±10 %.

5. If resistance readings are not correct, replace HEATING ELEMENT.

MODEL	VOLTAGE	TOTAL kW	CURRENT PER ELEMENT	RESISTANCE PER ELEMENT
6 Pan	208	17	10.19	20.4
	240	17	11.76	20.4
	480 / 277	17	10.22	27.1
10 Pan	208	30	18.08	11.5
	240	30	20.86	11.5
	480 / 277	30	18.10	15.3

HEATING ELEMENT DIAGNOSTIC CHECK - BASIC / PROFESSIONAL MODELS



⚠ WARNING

Certain procedures in this section require electrical test or measurements while power is applied to the machine. Exercise extreme caution at all times and follow Arc Flash procedures. If test points are not easily accessible, disconnect power and follow Lockout/Tagout procedures, attach test equipment and reapply power to test.

1. Check voltage across heating element wires at limiting and regulating contactor terminals.
   A. If voltage is correct, check current draw (Step 2).
   B. If voltage is not correct, check the following:
      - Voltage supply to steamer.
      - Fuses or breaker blown.
      - Power to contactor coils.
      - Contactors not pulling in (mechanical failure).

NOTE: **208V**: four elements used. **240V**: three elements used. **480V**: machines are connected in Wye configuration for 277V across each element.

2. Check current draw (amps) through heating element lead wires using an amp clamp meter. Compare them to values listed in table below.
   A. If current is correct, then heating element is ok.
   B. If current is not correct, check element resistance (Step 3).

NOTE: Values in table are nominal. Tolerance is ±10 %.

3. Remove one lead wire of each heating element from regulating contactor and check individual element resistance using a VOM. Compare them to values listed in table below.
   - If resistance readings are not correct, replace heating element.
4. Check steamer for proper operation.

MODEL	VOLTAGE	TOTAL kW	CURRENT PER ELEMENT	RESISTANCE PER ELEMENT
6 Pan	208	17	10.1	20.4
	240	17	11.7	20.4
	480 / 277	17	10.2	27.1
10 Pan	208	30	18.0	11.5
	240	30	20.8	11.5
	480 / 277	30	18.1	15.3

SUPER-HEATER DIAGNOSTIC CHECK - PROFESSIONAL MODELS



⚠ WARNING

Certain procedures in this section require electrical test or measurements while power is applied to the machine. Exercise extreme caution at all times and follow Arc Flash procedures. If test points are not easily accessible, disconnect power and follow Lockout/Tagout procedures, attach test equipment and reapply power to test.

1. Check voltage across super-heater wires at limiting and regulating contactor terminals. Compare them to values listed in table below.
   A. If voltage is correct, check current draw (Step 2).
   B. If voltage is not correct, check following:
      - Voltage supply to steamer.
      - Fuses or breaker open.
      - Relay K4/8.
      - Power to contactor coils.
      - Contactors not pulling in (mechanical problem).

NOTE: Elements of 480V machines are connected in Wye configuration for 277V across super-heater element.

2. Check current draw (amps) through super-heater lead wires using an amp clamp meter. Compare them to values listed in table below.
   A. If current is correct, then super-heater element is ok.

NOTE: Values in table are nominal. Tolerance is ±10 %

   B. If current is not correct, check resistance (Step 3).
3. Remove one of the super-heater lead wires from the regulating contactor and check resistance using a VOM. Compare them to values listed in table below.
   - If resistance is not correct, replace super-heater element.
4. Check steamer for proper operation.

VOLTAGE	TOTAL kW	Current	Resistance
208 / 240	0.75	3.1	76.8
480 / 277	0.75	2.7	102.3

PID CONTROLLER TEST - LWE MODEL



⚠ WARNING

Certain procedures in this section require electrical test or measurements while power is applied to the machine. Exercise extreme caution at all times and follow Arc Flash procedures. If test points are not easily accessible, disconnect power and follow Lockout/Tagout procedures, attach test equipment and reapply power to test.

NOTE: See applicable WIRING DIAGRAMS for connection information.

Diagnostic Test

The PID controller governs the operation of solid state contactor (3/6 CON) to provide power at regulating contactor (2/4CON) load contacts to power heating elements. PID controller and regulating contactor (2/4CON) are powered through K1/K5 relay contacts during initial heating or timed cooking.

When initially powered, PID controller performs a self-diagnostic test. It displays the program version such as "13.00" for several seconds (Fig. 64) then enters operation mode. If controller passes diagnostic test, the display:

- Shows actual sensor probe temperature (top).
- Shows set point temperature (bottom).
- Turns ON output signal to solid state contactor

NOTE: Water temperature must be below set point.

- Begins heating water.

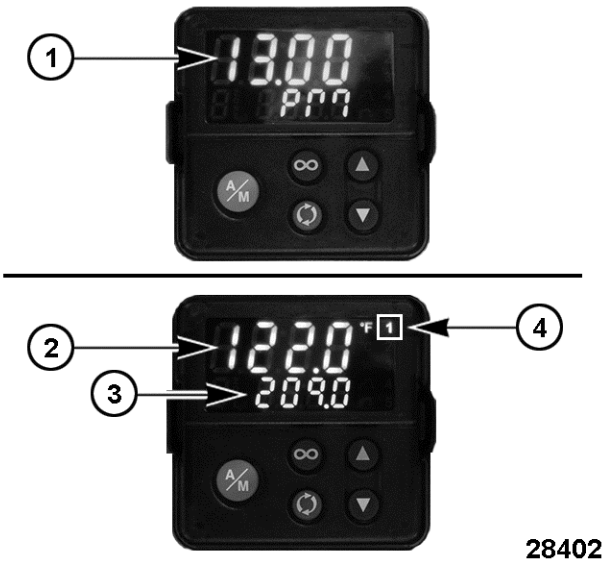

Fig. 64

PID Controller Display	
Item	**Description**
1	Program version during power on/self diagnostics test.
2	Sensor probe temperature inside sensor tube (°F or °C).
3	Set point temperature. Maximum operating temperature
4	Output (number 1). Output is active when displayed. If blinking, power is being pulsed to heating elements.

If PID controller or the sensor probe is malfunctioning, an error code will display.

Error Codes

- If Er.i1 error code is displayed, check sensor probe (thermocouple). Refer to SENSOR PROBE TEST - LWE MODEL.
- If a different error code is displayed, note code then contact Technical Support for further instructions.
- If display is not coming ON and water level and temperature conditions have been met, check wiring connections and power to the PID controller.

PID Operation Check

- Verify output (number 1) appears in top right corner of display when PID controller is powered and water temperature is below set point (209°F)
- When 1 is displayed, PIC controller is sending output signal to solid state contactor (3/6CON).
    - When 1 is constantly displayed, solid state contactor is ON 100%.

NOTE: Pulsing of power begins when temperature reaches approximately 180°F.

- When 1 is blinking, solid state contactor is turning ON/OFF to pulse power to heating elements.

SENSOR PROBE TEST - LWE MODEL



⚠ WARNING

Certain procedures in this section require electrical test or measurements while power is applied to the machine. Exercise extreme caution at all times and follow Arc Flash procedures. If test points are not easily accessible, disconnect power and follow Lockout/Tagout procedures, attach test equipment and reapply power to test.

NOTE: The sensor probe is a J type thermocouple.

NOTICE

Lead wires are polarity sensitive. The negative lead (red) must be connected to PID Controller S1 terminal for proper operation.

1. Access sensor probe wires connected to PID controller.
2. Remove sensor probe wires from PID controller.
3. Check thermocouple for a measurable resistance (approximately 5 to 10 ohms at room temperature).
    - If meter reads an overload (OL) condition (open), or zero ohms (short) replace thermocouple.

PRESSURE SWITCH CHECK / ADJUST



⚠ WARNING

Certain procedures in this section require electrical test or measurements while power is applied to the machine. Exercise extreme caution at all times and follow Arc Flash procedures. If test points are not easily accessible, disconnect power and follow Lockout/Tagout procedures, attach test equipment and reapply power to test.

NOTE: Pressure can be checked with the small air pocket that exists between the delime port cap and water level probe housing in the delime hose. Make certain that no leaks exist in generator tank or pressure gauge fittings.

CHECK

1. Remove following:
    - RIGHT SIDE BOTTOM PANEL.
    - LEFT SIDE BOTTOM PANEL.
    - BOTTOM FRONT PANEL.
2. Turn steamer OFF.
3. Allow steamer to complete drain cycle.
4. Close cooking compartment door.
5. Remove cap from delime port and install pressure gauge.
6. Turn steamer ON.
    A. Set timer for approximately 10 minutes.

NOTE: Steam production is stabilized after approximately five fill cycles.

    B. Wait for full steam production to stabilize. Observe LED on water control board to count cycles.

NOTICE

If pressure should rise above 5.0 psi when performing check, release clamp on steam outlet hose. Pressure switch is out of tolerance and must be adjusted.

NOTE: Operating pressures will vary slightly between steamer being serviced and gauge used.

NOTE: Pressure gauge will oscillate as fill water enters generator tank.

    C. Observe pressure gauge once steam begins to be generated. Gauge should level out at approximately 1.25 to 2.0 psi.

7. While observing pressure gauge:
    A. Temporarily clamp steam outlet hose.

NOTE: Contactors should open when pressure is between 4.5 - 4.7 psi.

    B. Listen for limiting and regulating contactors to OPEN.
    C. Release clamp from steam outlet hose.
    D. Listen for limiting and regulating contactors to CLOSE.
    E. Record pressure reading.
    F. Repeat steps above three times to find average cut-out pressure.
    G. If pressure is outside of 4.5 - 4.7 psi, adjustment is necessary.
    H. If cut-out pressure is within specifications, turn steamer off. Allow time for steamer to drain.
8. Remove test gauge and reinstall delime cap.

ADJUST

1. Set timer for approximately 10 minutes.

NOTE: Steam production is stabilized after approximately five fill cycles.

2. Wait for full steam production to stabilize. Observe LED on water control board to count cycles.

NOTE: Make small incremental adjustments (1/8 turn of adjustment wheel) when adjusting cut-out pressure.

3. Turn adjustment wheel (1, Fig. 65) to bring cut-out pressure into tolerance.

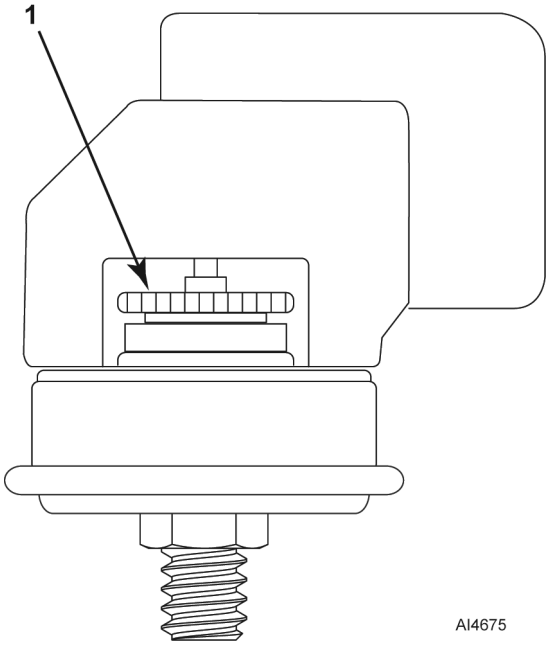

Fig. 65

- Turn adjustment wheel CCW to decrease cut-out pressure.
- Turn adjustment wheel CW to increase cut-out pressure.

4. Check cut-off pressure after making adjustment.
5. Repeat CHECK and ADJUST as necessary until cut-out pressure is within 4.5 to 4.7 psi.

MANUAL DRAIN



⚠ WARNING

Disconnect the electrical power to the machine and follow lockout / tagout procedures.

1. Turn off steamer water supply.
2. Remove RIGHT SIDE TOP PANEL.
3. Push in on manual drain knob and rotate 90° CCW.
4. Drain tank.
5. Rotate manual drain knob 90° CW to close valve.

ELECTRICAL OPERATION

COMPONENT FUNCTION

PID Controller	Monitors input signal from temperature sensor mounted in the sensor tube and regulates solid state contactor (3/6CON) as needed to maintain tank temperature for steam generation. On initial startup, the controller keeps the solid state contactor energized at 100% until temperature sensor approaches set point then begins pulsing power to the contactor as needed to maintain tank temperature.
Temperature Sensor	J type thermocouple mounted in the sensor tube (vent). Provides input signal to PID controller.
Solid State Contactor (3/6CON)	Modulates power to the tank heaters (through regulating contactor 2/5CON) when signaled by the PID controller.
Contactor, Limiting (1/4CON)	Connects one side of heating elements to incoming power. Energized whenever water level control (LLCO) coil is energized and the high limit thermostat and pressure switch are both closed.
Contactor, Regulating (2/5CON)	Connects one side of heating elements to power. On constantly during cooking cycle.
Drain Valve, Motorized (Ball type)	Motorized control for opening and closing drain valve.
Element, Heating	Located in steam generator tank. Heats water to produce steam.
Fuse, (1/4FU)	Slow blow 4A fuse. Located on primary side of main transformer. Protects control circuitry from over-currents.
Fuse, (2/5FU)	Slow blow 4A fuse. Located on primary side of main transformer. Protects control circuitry from over-currents.
Light (3/6LT), Power	Amber (AM) colored light. On when power switch is on (internal to power switch).
Light (2/5LT), Cook . . .	Red (RD) colored light. On when hold thermostat is satisfied and door is closed and timer is set.
Light (1/4LT), Ready	Green (GN) colored light. On when hold thermostat is satisfied. Latches on when hold thermostat is satisfied.
Water Level Control (WLC) Board	Controls water level by monitoring conditions of the 3 water level probes H, L and LLCO.
Probe (H)	High water level probe connected to internal latch relay circuit of the water level control board. Water must reach this level before internal latch relay is energized.
Probe (L)	Low water level probe connected to internal latch relay circuit of the water level control board.
Probe (LLCO)	Low Level Cut-Off (LLCO) probe. Controls power to heating and timer circuitry. Controls fast fill solenoid.
Relay (K1/K5)	Controlled by hold thermostat. Enables timer circuit.
Relay (K2/K6) LLCO	Low Level Cut-Off (LLCO) external relay. Only energized during drain. Controls Flush, Fast Fill and Vacuum Relief solenoids.
Relay (K3/K7) Drain Relay	Controlled by Time Delay Relay. Only energized during drain cycle. Controls WLC board and LLCO relay K2/K6 during the drain cycle. Disables heating and timer circuitry.
Relay (K4/K8)	Latches Ready light on.

Relay, Time Delay	Controlled by the power switch. Output becomes active for 90 seconds when power switch is turned to off. Only used during drain cycle.
Solenoid (1SOL/ 6SOL), Cooling	Controlled by the condensate thermostat. Mixes cold water with hot condensate water from cooking chamber to reduce water temperature at drain.
Solenoid (2SOL/ 7SOL), Flush	On only during drain cycle. Mixes cold water with tank water before entering drain box. Keeps drain hose clear of debris.
Solenoid (3SOL/ 8SOL), Fast Fill	Initial tank fill at a fast rate. Used during last stage of drain cycle to flush drain opening free of debris.
Solenoid (4SOL/ 9SOL), Slow Fill	Secondary tank fill at a slow rate to prevent tank temperature from dropping rapidly. Energized as necessary during operation to replenish water in tank.
Solenoid (5SOL/ 10SOL), Vacuum Relief	Provides open air line for vacuum relief during drain cycle to prevent cooking chamber flex. (Basic and Professional models only)
Switch (1S/3S), Power	Two position rocker switch that controls machine steam and drain operations. Internal power light (3LT/6LT) indicates when switch is on.
Switch (2S/5S), Door	Plunger activated, switch is wired in series with timer. When switch is closed and timer is set to a time or constant, regulating contactor will be energized 100% of the time once ready light is on (hold thermostat satisfied).
Switch (1PAS/2PAS), Pressure	Pressure cut-out protection. Cuts off electrical energy to the controls circuit if pressure rises above the upper tolerance level for the switch.
Thermostat (1TAS/ 4TAS), Condensate . . .	Monitors temperature of water entering the facility drain system. Controls the cooling solenoid during cooking operation and the cooling and flush solenoids during drain cycle (135°F cut-in).
Thermostat (2TAS/ 5TAS), High-Limit	Protects against heating element over temperatures generally caused by tank boiling dry. A capillary tube device. Bulb is mounted directly to the heating element and high-limit body is mounted to a bracket on the frame rail (257°F cut-out).
Thermostat (3TAS/ 6TAS), Hold	Controls temperature of water in steam generator tank to 195°F (closes at 195°F).
Timer (1TR/2TR)	Used for timed cook cycles from 0 to 60 minutes. Professional models have a CONSTANT position for continuous steam operation.
Transformer (1T/3T), Main	Step down transformer from line voltage to control voltage level (120 VAC).
Transformer (2T/4T), Drain	Provides 24 VAC for motorized drain valve during drain cycle.
Buzzer	Creates audible signal when timed cook cycle is complete.

COMPONENT LOCATION

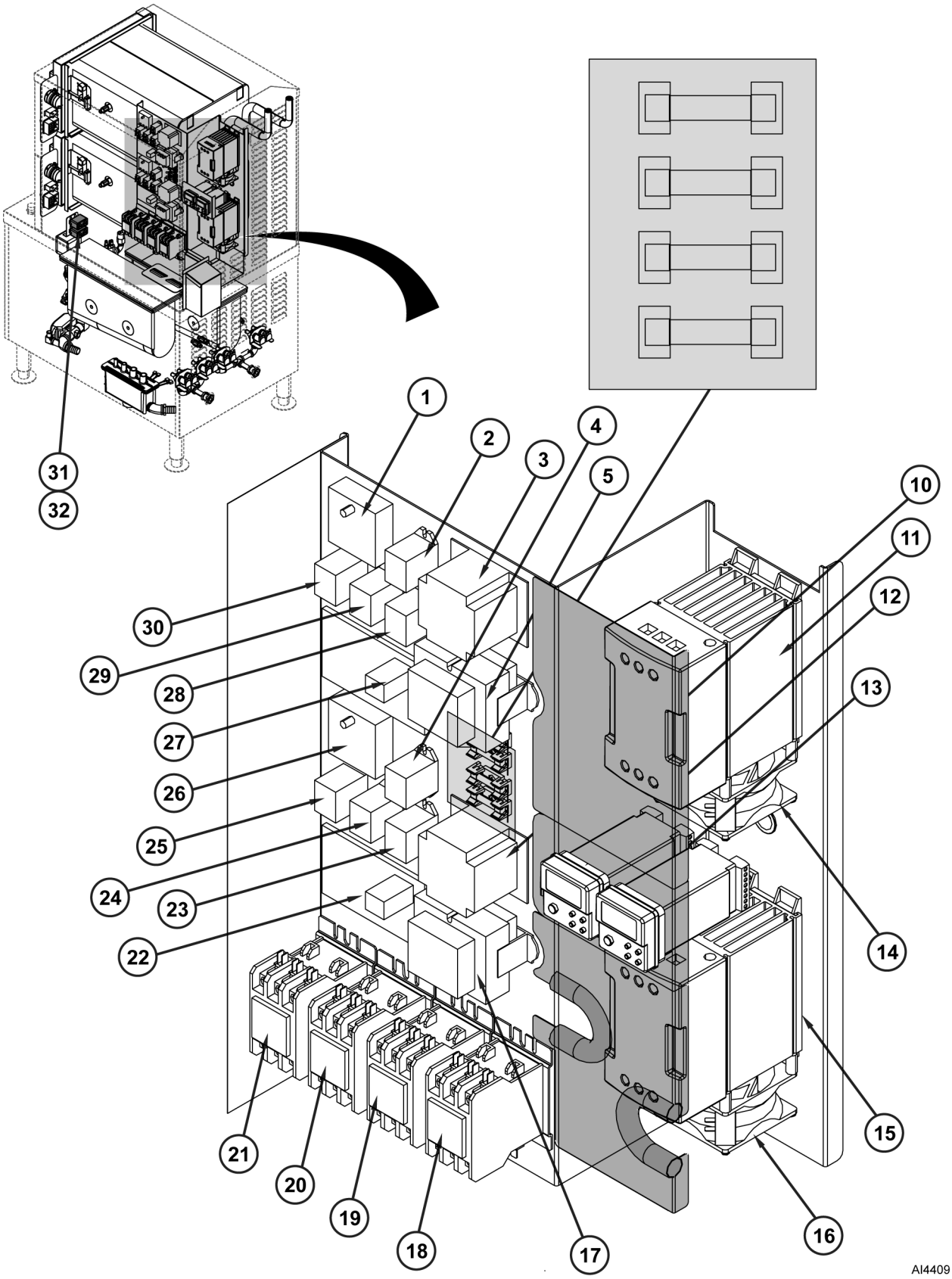

Electrical Panel (LWE Model)

Item Number	Nomenclature
1	Time Delay Relay 1
2	Relay K4
3	Transformer 2T
4	Relay K8
5	Transformer 1T
6	Fuse 1FU
7	Fuse 2FU
8	Fuse 3FU
9	Fuse 4FU
10	Transformer 3T
11	Solid State Contactor (3 CON)
12	PID Controller 1
13	PID Controller 2
14	Fan (Part Of Contactor 3 CON)
15	Solid State Contactor (6 Con)
16	Fan (Part Of Contactor 6 CON)
17	Transformer 4T
18	Regulating Contactor (5CON)
19	Limiting Contactor (4CON)
20	Regulating Contactor (2CON)
21	Limiting Contactor (1CON)
22	Water Level Control PCB 2
23	Relay K7
24	Drain Relay K6
25	LLCO Relay K5
26	Time Delay Relay 2
27	Water Level Control PCB 1
28	Drain Relay K3
29	LLCO Relay K2
30	Relay K1
31	Over-Temperature Switch 1
32	Over-Temperature Switch 2

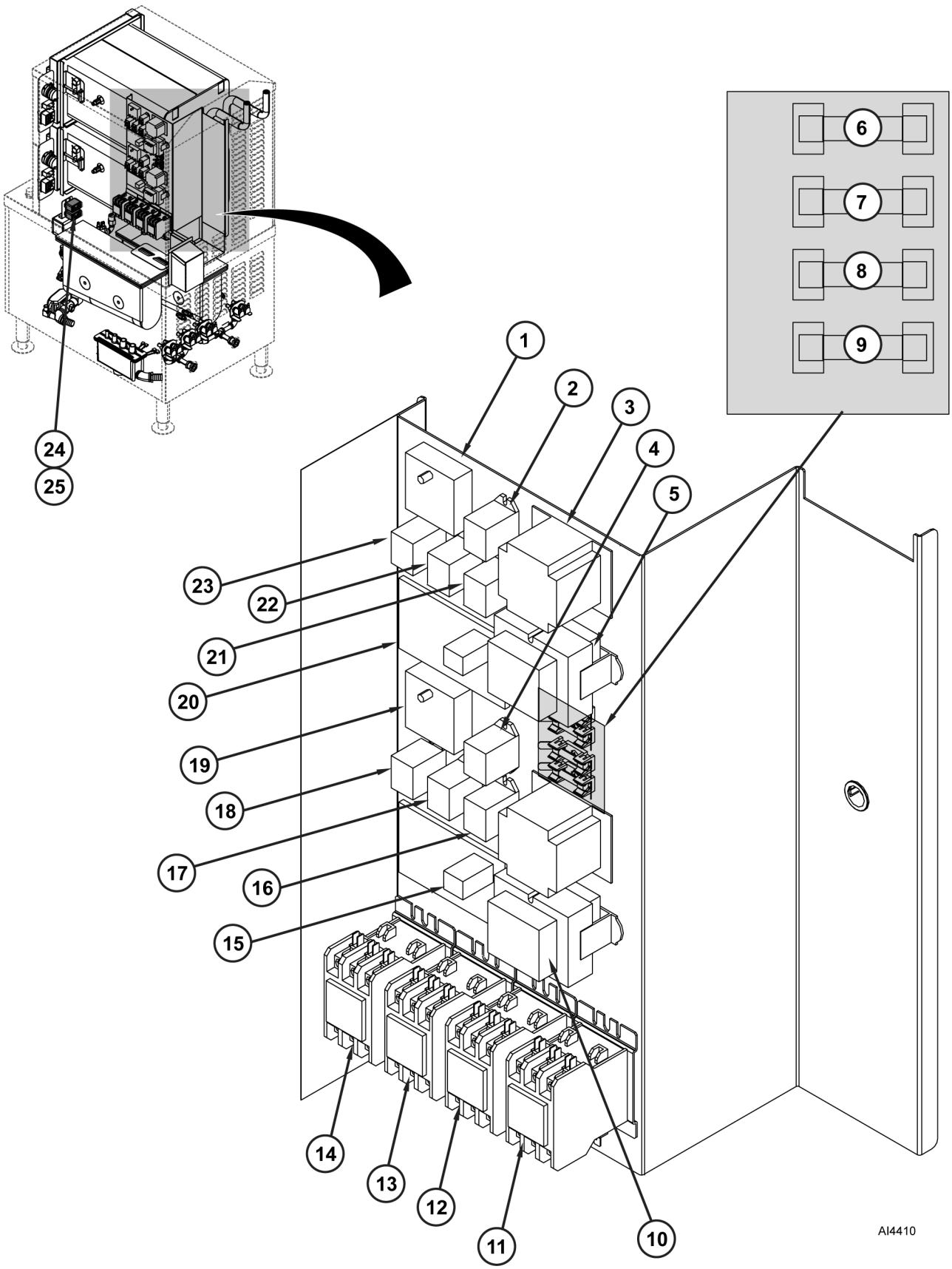

Electrical Panel (Standard / Professional Models)

Item Number	Nomenclature
1	Time Delay Relay
2	Relay K4
3	Transformer T2
4	Relay K8
5	Transformer T1
6	Fuse 1FU
7	Fuse 2FU
8	Fuse 3FU
9	Fuse 4FU
10	Transformer T3
11	Regulating Contactor (5CON)
12	Limiting Contactor (4CON)
13	Regulating Contactor (2CON)
14	Limiting Contactor (1CON)
15	Water Level Control PCB 2
16	Relay K8
17	Drain Relay K6
18	Relay K5
19	Time Delay Relay 2
20	Water Level Control PCB 1
21	Drain Relay K3
22	LLCO Relay K2
23	Relay K1
24	Over-Temperature Switch 1
25	Over-Temperature Switch 2

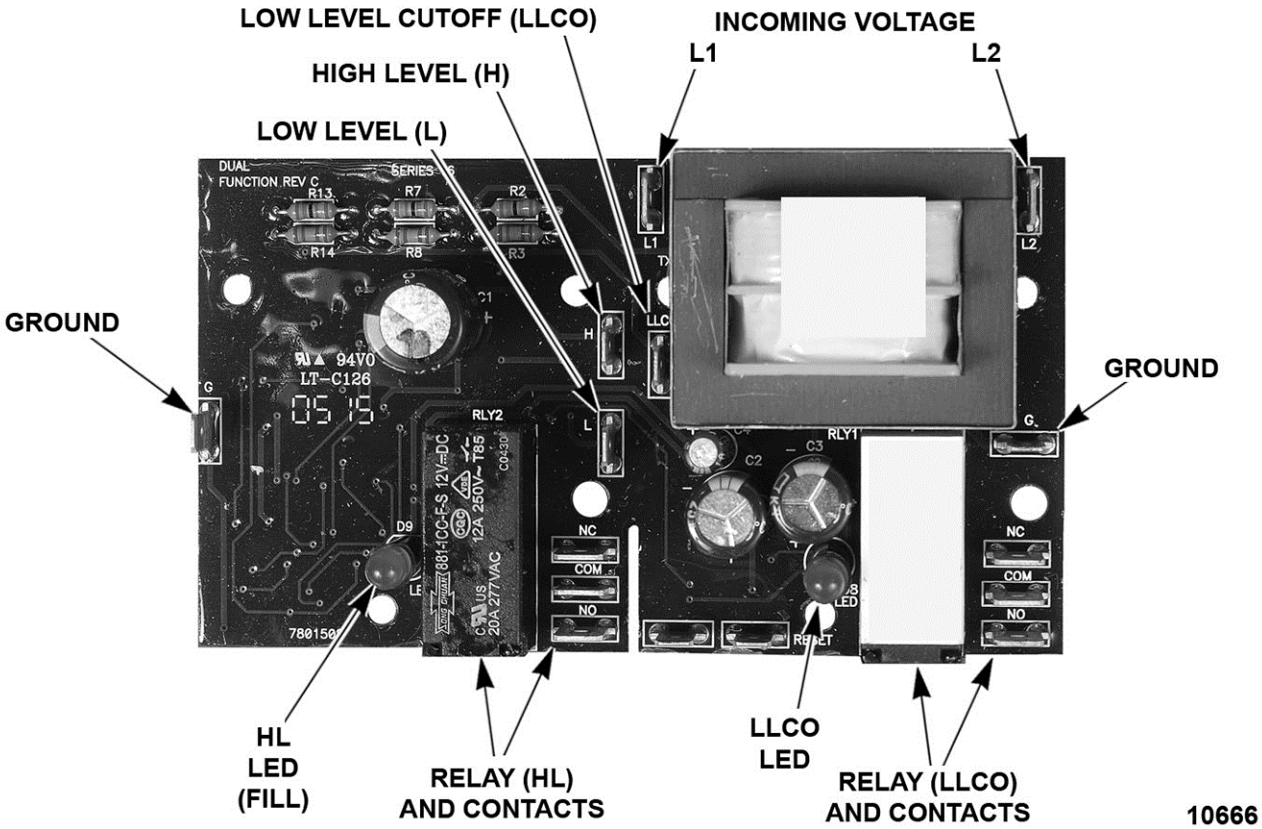

Water Control Board

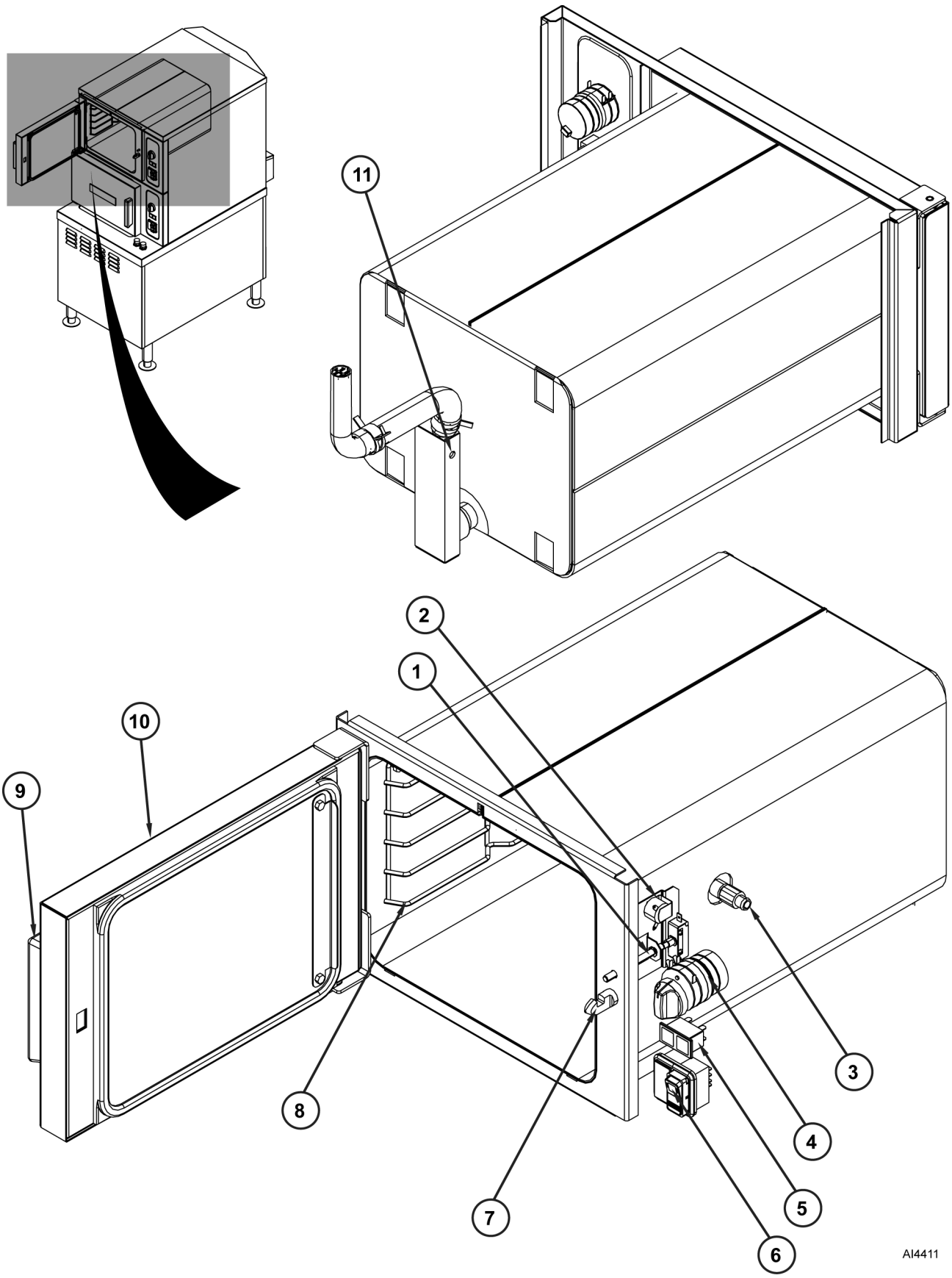

Cooking Compartment and Controls

Item Number	Nomenclature
1	Door Sensor
2	Buzzer
3	Atmospheric Vent
4	Timer
5	Indicator Lights
6	ON/OFF Switch
7	Latch
8	Pan Rack
9	Door Handle
10	Door
11	Thermocouple (LWE Models Only)

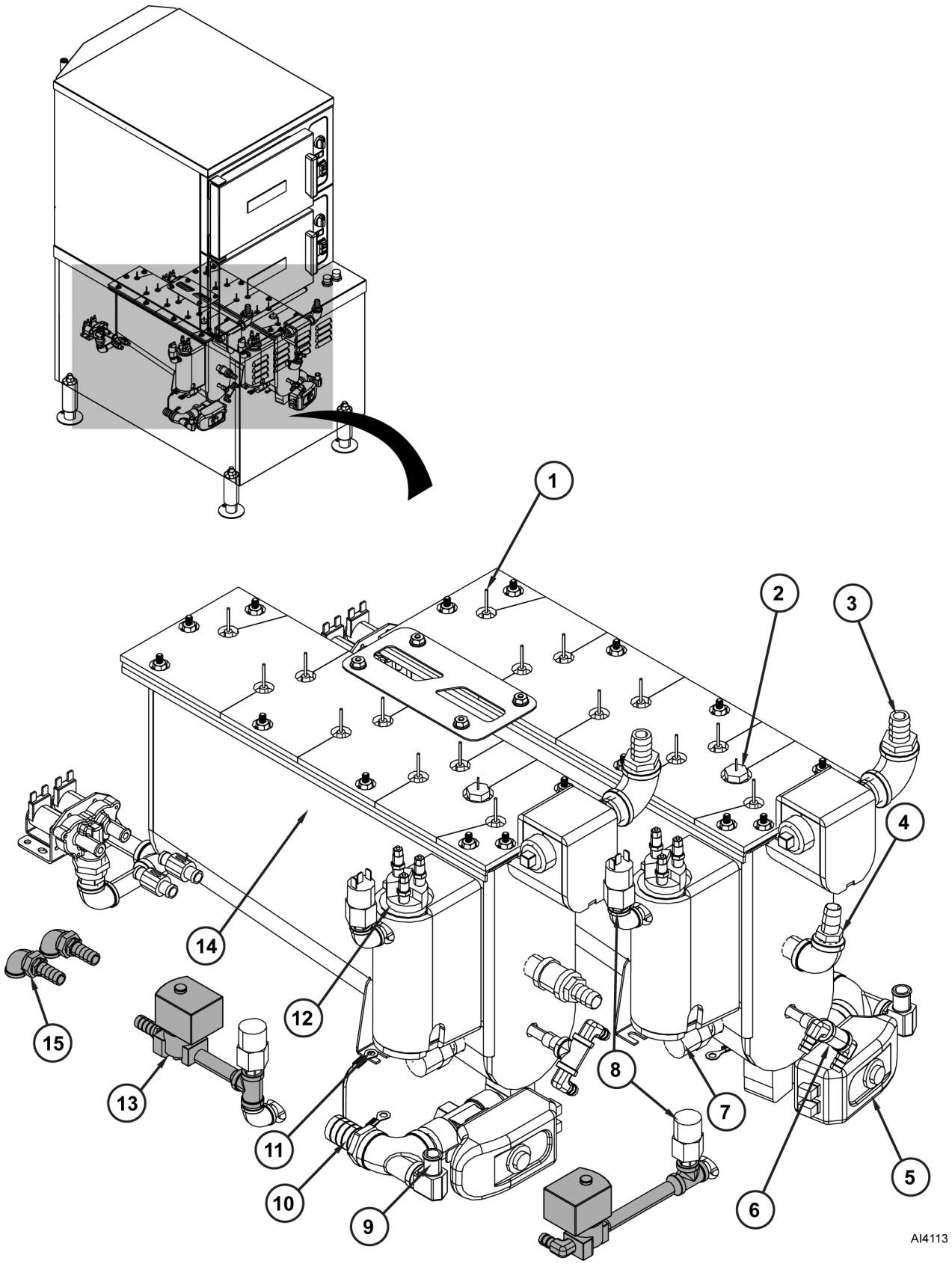

Steam Generator - Front View

Item Number	Nomenclature
1	Heating Element Lead
2	High Limit Switch Probe
3	Steam Outlet Port
4	Deliming Port
5	Motorized Drain Valve
6	Filtered Water Inlet Port
7	Hold / Cycling Thermostat
8	High Pressure Limit
9	Flush Port
10	Drain Port
11	Steam Generator 2 Ground Bond Strap
12	Water Level Probes
13	Vacuum Relief Valve (Basic / Professional Only)
14	Steam Generator Tank
15	Vacuum Relief Valve Port (Basic / Professional Only)

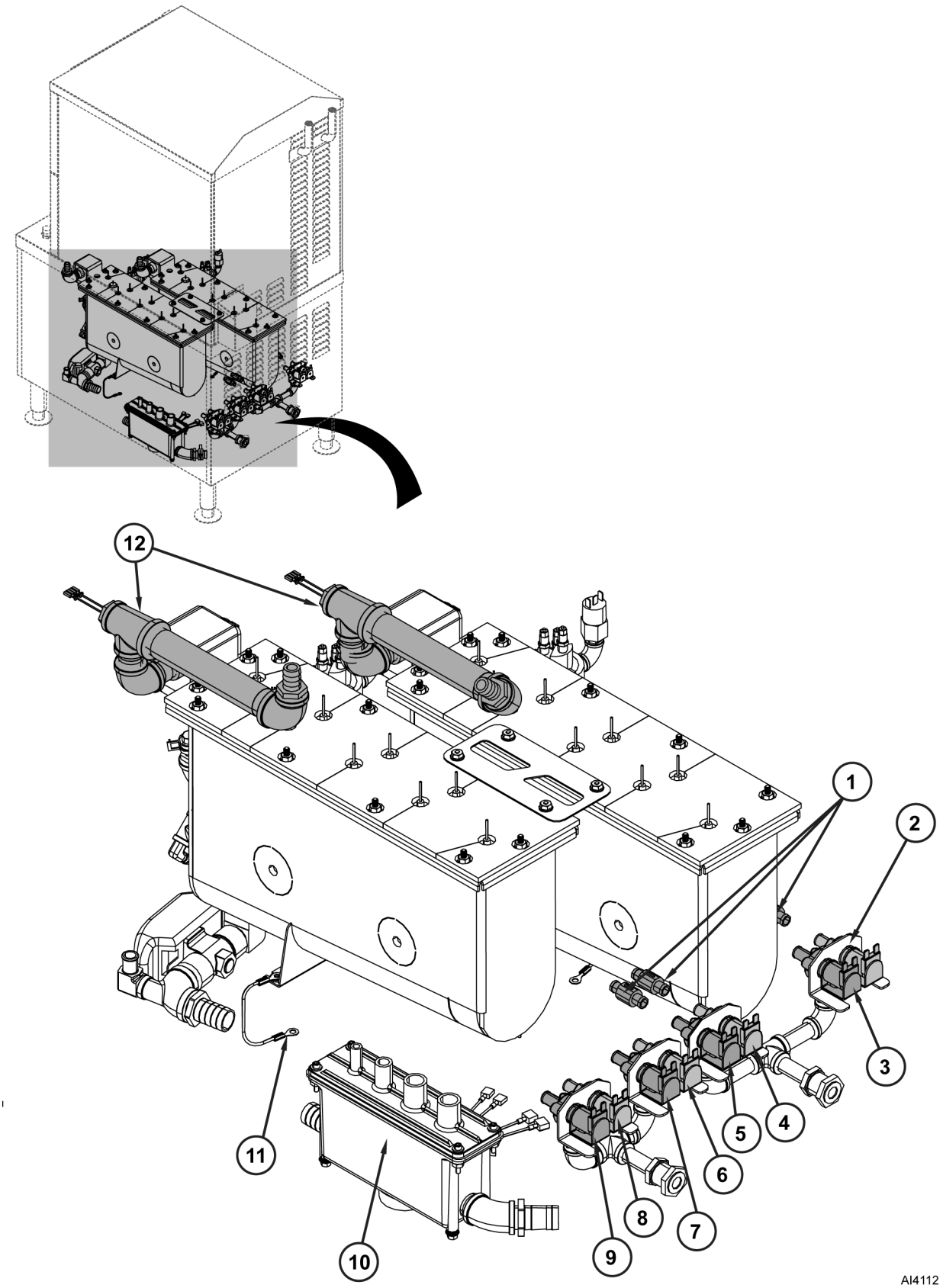

Steam Generator - Rear View

Item Number	Nomenclature
1	Check Valves (Filtered Water Supply Lines)
2	Steam Generator 2 Slow Fill Valve
3	Steam Generator 2 Fast Fill Valve
4	Steam Generator 1 Slow Fill Valve
5	Steam Generator 2 Fast Fill Valve
6	Drain Flush Valve 2
7	Cold Water Condensate Valve 2
8	Drain Flush Valve 1
9	Cold Water Condensate Valve 2
10	Drain Box
11	Steam Generator 1 Ground Bond Strap
12	Super-heaters (Professional Only)

SEQUENCE OF OPERATION (BASIC MODEL)

NOTE: Lower steamer unit components are referenced in Sequence of Operation. Upper steamer unit components operate in same manner.

Refer to the correct wiring diagram for model being serviced when reviewing sequence of operation.

NOTE: If power switch is set to off when service voltage is applied, steamer will enter the timed drain cycle.

1. Conditions
    - Steamer connected to correct voltage (120VAC present across X1 & X2 on secondary side of main transformer).
    - Steamer connected to water supply with correct water requirements.
    - Power switch is off.
    - Condensate thermostat is open.
    - High limit thermostat closed.
    - Pressure switch is closed.
    - Hold thermostat open.
    - Drain open and steam generator tank (referred to as tank) is empty.
    - Steamer door open.
    - Timer is off.
    - Time delay relay timed out. Timer has no output on terminal 1.
    - Water level control (WLC) board and tank properly grounded.
2. ON/OFF lever pushed in.
    - Manual linkage closes drain valve and operates power switch.
    - N.O. contacts close.
    - Power light (3LT - amber) illuminates.
    - X1 potential to L1 of WLC board.
        - 120VAC across L1 & L2 of WLC board.
        - High Level (HL) coil energized on WLC board.
        - HL LED on WLC board lights.
3. Slow fill solenoid energized through closure of HL contacts.
    - Tank fills.
4. Water level reaches Low Level Cut-Off (LLCO) probe.
    - LLCO coil is energized. LLCO LED on WLC board lights.
    - LLCO N.O. contacts close enabling heating element circuit.
5. Limiting and regulating contactor coils energize.
    - Power to heating element.
    - Tank water heats.
6. Water level reaches Low (L) level probe.
    - No action as Internal Latching Relay (ILR-1) contacts are open.

7. Water level reaches High (H) level probe.
    - ILR coil on WLC board energizes.
    - HL coil de-energized by ILR-2 contacts opening.
    - Slow fill solenoid de-energized by opening of HL contacts on WLC board.
8. Tank water reaches 195°F.
    - Hold thermostat contacts close.
    - Relay K1 energizes.
    - Timer circuit is enabled through closure of N.O. contacts K1-5/3 and K1-6/4.
    - Temperature in tank is maintained at 195°F by hold thermostat control of regulating contactor through relay contacts K1-1/5.
9. Timer knob set to time other than zero.
    - Timer motor energized through closure of N.O. contacts K1-6/4 when time set is greater than zero.
    - Door switch closure allows 120VAC across timer wires 18 & 19.
    - Timer counts down from set time.
    - Tank temperature maintained by control of regulating contactor coil through N.O. contacts K1-6/4 and (Timer -1/3, door switch, K1-5/3).
10. Steamer door is closed.
    - Regulating contactor remains energized as long as time remains on timer and door is closed.
    - Heating element energized continuously.
11. Temperature of condensate exiting cooking cavity increases to above 135°F.
    - Condensate thermostat closes energizing cooling solenoid 1SOL.
    - Condensate is cooled in drain box before entering facility drain system.
12. Door opened during timed cook cycle.
    - Timer continues count down until time equals zero even if steamer door is opened.
    - Regulating contactor de-energized until below 195°F.
13. Time reaches zero.
    - Buzzer is energized through N.O. contacts K1-6/4 and timer - 1/4.
    - Buzzer remains energized until timer knob is turned to OFF, new time is set or drain handle is pulled out (power switch off).
14. Drain handle pulled out. Tank drains.
    - Power light (1LT-Amber) turns off.
    - Time delay relay is energized through terminals 2 & 3 for set time (90 seconds). Output (120VAC) on terminal 1.
    - Time delay relay output energizes K3 coil.
        - X1 potential to L1 of WLC board through N.O. contacts K3-5/3.
        - LLCO relay K2 coil energized through closed N.O. contacts K3-5/3, WLC board N.O. contacts LLCO and N.O. contacts K3-6/4.
        - Drain flush solenoid enabled by closure of N.O. contacts K2-3/5.
        - Heating element and timer control circuits are disabled by opening of N.C. contacts K3-6/2.
15. Condensate thermostat reaches 135°F cut-in temperature, contacts close. Drain water temperature is regulated through condensate thermostat.
    - Cooling solenoid and drain flush solenoid energized through cycling of condensate thermostat.
16. Tank water level drops below L probe.
    - ILR coil de-energizes.
        - HL coil energized on WLC board. HL LED on WLC board lights.
17. Tank water level drops below LLCO probe.
    - LLCO relay K2 de-energized through opening of WLC board LLCO N.O. contacts.
        - Drain flush solenoid energized through N.C. contacts (K2-6/2).
        - Flush/fast fill solenoid energized through N.C. contacts K2-6/2 and K2-5/1.
        - Vacuum relief solenoid is energized through closed N.O. contacts K2-2/6.
18. Time delay relay time elapses.
    - Power (120VAC) removed from output of time delay relay terminal 1.
    - All solenoids, coils and WLC board are de-energized.

SEQUENCE OF OPERATION (PRO MODEL)

NOTE: Lower steamer unit components are referenced in Sequence of Operation. Upper steamer unit components operate in same manner.

Refer to the correct wiring diagram for model being serviced when reviewing sequence of operation.

NOTE: If power switch is set to off when service voltage is applied, steamer will enter the timed drain cycle.

1. Conditions
    - Steamer connected to correct voltage (120VAC potential across X1 & X2 on secondary side of main transformer).
    - Steamer connected to water supply with correct water requirements.
    - Power switch is in off position.
    - Condensate thermostat is open.
    - High limit thermostat closed.
    - Pressure switch is closed.
    - Hold thermostat open.
    - Drain closed and steam generator tank (referred to as tank) is empty.
    - Steamer door open.
    - Timer is off.
    - Time delay relay timed out. Timer has no output on terminal 1.
    - Water level control (WLC) board and tank properly grounded.
2. Power switch (1S) is turned on.
    - Power light (3LT - amber) illuminates.
    - X1 potential to L1 of WLC board.
        - 120VAC across L1 & L2 of WLC board.
        - High Level (HL) coil energized on WLC board. HL LED on WLC board lights.
    - Fast fill solenoid (3SOL) energized through N.C. contacts K3-1/5, N.C. contacts WLC (LLCO) and N.C. contacts K2-5/1.
    - Tank begins to fill with water.
3. Water level reaches Low Level Cut-Off (LLCO) probe.
    - LLCO coil is energized. LLCO LED on WLC board lights.
    - LLCO N.C. contacts open de-energizing fast fill solenoid.
    - LLCO N.O. contacts close enabling timer and heating element circuits.
4. Limiting contactor coil energizes.
5. Regulating contactor coil energizes through N.C. contacts K1-1/5.
    - Power to heating element.
    - Tank water heats.
6. Tank water reaches 195°F.
    - Hold thermostat contacts close.
    - Slow fill solenoid is energized through closure of cycling thermostat (3TAS) and closed WLC (HL) N.O. contacts.
    - Tank continues to fill.
    - Relay K1 energizes. Timer circuit is enabled through closure of N.O. contacts K1-6/4 and K1-5/3.
        - Ready light (1LT - green) illuminates.
        - Relay K4 energizes. Latch circuit is completed by closure of N.O. contacts K4-5/3.
            - Super-heater energizes through closure of N.O. contacts K4-6/4.
            - Ready light (1LT - green) lights.
        - Temperature in tank is maintained at 195°F by cycling thermostat control of regulating contactor through N.C. contacts K1-1/5.
7. Water level reaches Low (L) level probe.
    - No action as Internal Latching Relay (ILR-1) contacts are open.
8. Water level reaches High (H) level probe.
    A. ILR coil on WLC board energizes.
    B. HL coil de-energized by ILR-2 contacts opening.
    C. Slow fill solenoid de-energized by opening of HL contacts on WLC board.
    D. HL LED on WLC board turns off.
9. Timer knob set to CONSTANT (continuous steam operation) or timed setting.

- Power (120VAC) present to door switch wire #19.
- If timer is set to a timed setting, timer motor is energized through closure of N.O. contacts K1-6/4.
    - Count down time begins.

10. Steamer door is closed.
    - Door switch (2S) contacts close. Cook light (2LT - red) illuminates.
    - Regulating contactor remains energized as long as door is closed and timer is set to CONSTANT or time remains on timed cycle.
11. Temperature of condensate exiting cooking cavity increases to above 135°F.
    - Condensate thermostat closes energizing cooling solenoid 1SOL.
    - Condensate is cooled in drain box before entering facility drain system.
12. Door opened during timed cook cycle.
    - Timer continues count down until time equals zero even if steamer door is opened.
    - Regulating contactor de-energizes and cook light turns off.
13. Time reaches zero.
    - Buzzer is energized through N.O. contacts K1-6/4 and timer - 11/14.
        - Buzzer remains energized until timer knob is turned to OFF, new time or CONSTANT is selected or steamer is turned off.
14. Power switch (1S) pushed to off.
    - Power (3LT), cook (2LT) and ready (1LT) lights turn off.
    - Time delay relay is energized through terminals 2 & 3. Output (120VAC) on terminal 1 for 90 seconds.
    - Time delay relay output energizes K3 coil.
        - X1 potential to L1 of WLC board through N.O. contacts K3-3/5.
        - Relay K2 coil energized through WLC N.O. contacts LLCO and N.O. contacts K3-6/4.
        - Heating element and timer control circuits are disabled by opening of N.C. contacts K3-6/2.
    - Power (120VAC) across primary of drain transformer.
        - Motorized drain valve energized.
        - Drain valve opens and tank begins to drain.
        - Drain valve N.O. contacts close.
15. Condensate thermostat reaches 135°F, contacts close.
    - Drain water temperature is regulated through condensate thermostat.
    - Cooling solenoid (1SOL) energized through closure of condensate thermostat contacts.
    - Flush solenoid (2SOL) energized through closure of N.O. contacts K2-3/5 and drain valve N.O. contacts.
16. Tank water level drops below L probe.
    - ILR coil de-energizes.
        - HL coil energized on WLC board. HL LED on WLC board lights.
17. Tank water level drops below LLCO probe.
    - Relay K2 de-energized through opening of WLC board LLCO N.O. contacts.
    - Vacuum relief solenoid energized through N.C. contacts K2-2/6.
    - Fast fill solenoid energized through WLC (LLCO) N.C. contacts and N.C. contacts K2-5/1.
    - Flush solenoid (2SOL) remains energized through WLC (LLCO) N.C. contacts.
18. Time delay relay time elapses.
    - Power (120VAC) removed from output of time delay relay terminal 1.
        - All solenoids, coils and WLC board are de-energized.
        - Motorized drain valve de-energized.
        - Drain valve closes.

SEQUENCE OF OPERATION (LWE MODEL)

NOTE: Lower steamer unit components are referenced in Sequence of Operation. Upper steamer unit components operate in same manner.

Refer to the correct wiring diagram for model being serviced when reviewing sequence of operation.

NOTE: If power switch is set to off when service voltage is applied, steamer will enter the timed drain cycle.

1. Conditions.
    - Steamer connected to correct voltage (120VAC potential across X1 & X2 on secondary side of main transformer).
    - Steamer connected to water supply with correct water requirements.
    - Power switch is in off position.
    - Condensate thermostat open.
    - High limit thermostat closed.
    - Pressure switch closed.
    - Hold thermostat open.
    - Drain closed and steam generator tank (referred to as tank) is empty.
    - Steamer door open.
    - Timer is off.
    - Time delay relay timed out. Timer has no output on terminal 1.
    - Water Level Control (WLC) board and tank properly grounded.
    - PID controller and solid state contactor are off.
2. Power switch (1S) is turned on.
    - Power light (3LT - amber) illuminates.
    - X1 potential to L1 of WLC board.
        - 120VAC across L1 & L2 of WLC board.
        - High Level (HL) coil energized on WLC board.
        - HL LED on WLC board lights.
    - Fast fill solenoid (3SOL) energized through N.C. contacts K3-1/5, N.C. contacts WLC (LLCO) and N.C. contacts K2-5/1.
    - Tank begins to fill with water.
3. Water level reaches Low Level Cut-Off (LLCO) probe.
    - LLCO coil is energized. LLCO LED on WLC board lights.
    - LLCO N.C. contacts open de-energizing fast fill solenoid.
    - LLCO N.O. contacts close enabling timer and heating element circuits.
4. Limiting contactor coil and solid state contactor cooling fan energize through N.C K3-6/2 contacts.
5. Regulating contactor coil and power to the PID controller energize through N.C. contacts K1-1/5.
6. Temperature measured in the sensor tube (vent) is below PID controller set point. PID controller signals solid state contactor to modulate power to the heating elements through regulating contactor load contacts. Tank water heats.
7. Tank water reaches 195°F.
    - Hold thermostat contacts close.
    - Slow fill solenoid is energized through closure of hold thermostat (3TAS) and closed WLC (HL) N.O. contacts. Tank continues to fill.
    - Relay K1 energizes.
        - Timer circuit is enabled through closure of N.O. contacts K1-6/4 and K1-5/3.
        - Relay K4 energizes - Latch circuit is completed by closure of N.O. contacts K4-5/3.
        - Ready light (1LT - green) lights.

NOTE: PID controller governs operation of solid state contactor and provides power to load contacts on regulating contactor to power heating elements.

- Regulating contactor and PID controller de-energized when K1-1/5 N.C. contacts open.
    - Temperature in tank cycles between 195°F (hold thermostat setting) and 209°F (PID controller set point).

8. Water level reaches Low (L) level probe.
    - No action. The internal latching relay (ILR-1) contacts are open.
9. Water level reaches High(H) level probe.
    - Internal latching relay (ILR) coil on WLC board energizes.
    - High Level (HL) coil de-energized by ILR-2 contacts opening.
    - Slow fill solenoid de-energized by opening of HL contacts on WLC board.
    - HL LED on WLC board turns off.
10. Timer knob set to CONSTANT (for continuous steam operation) or timed setting.

- Power (120VAC) present to door switch wire #19.
- If timer is set to a timed setting, Timer motor is energized through closure of N.O. contacts K1-6/4. Count down time begins when door is closed.

11. Steamer door is closed.
    - Door switch (2S) contacts close. Cook light (2LT - red) illuminates.
    - Regulating contactor and PID controller remain energized as long as door is closed and timer is set to CONSTANT or time remains on timed cycle.
    - Steam flows from the steam generator into the cooking compartment to begin cooking product. Uncondensed steam flows out of the cooking compartment through the compartment drain and up the sensor tube (vent) where the temperature sensor is mounted. The temperature sensor output is monitored by the PID controller.
    - As temperature in sensor tube approaches set point, the PID controller signals the solid state contactor to change the pulse rate to the steam generator heating elements, limiting the production of excess steam (unabsorbed energy).
12. Under some conditions, the temperature of condensate exiting the cooking compartment and entering the drain box may exceed 135°F. When this occurs:
    - Condensate thermostat closes and energizes cooling solenoid. Condensate is cooled in drain box before entering facility drain system.
13. Door opened during timed cook cycle.
    - Timer continues count down until time equals zero even if steamer door is opened.
    - Regulating contactor and PID controller de-energize. Tank heat and cook light turn off.
14. Time reaches zero.
    - Buzzer is energized through N.O. contacts K1-6/4 and Timer - 11/14.
    - Buzzer remains energized until timer knob is turned to OFF, new time or CONSTANT is selected or steamer is turned off.
15. Power switch (1S) pushed to off.
    - Power (3LT), cook (2LT) and ready (1LT) lights turn off.
    - Time delay relay is energized through terminals 2 & 3. Output (120VAC) on terminal 1 for 90 seconds.
    - Time delay relay output energizes K3 coil.
        - X1 potential to L1 of WLC board through N.O. contacts K3-3/5.
        - Relay K2 coil energized through WLC N.O. contacts LLCO and N.O. contacts K3-6/4.
        - Heating element and timer control circuits are disabled by opening of N.C. contacts K3-6/2.
    - Power (120VAC) across primary of drain transformer. Motorized drain valve energized. Drain valve opens and tank begins to drain.
        - Drain valve N.O. contacts close.
    - Power removed from PID controller. Solid state contactor de-energized.
16. Condensate thermostat reaches 135°F, contacts close. Drain water temperature is regulated through condensate thermostat.
    - Cooling solenoid energized through closure of Condensate Thermostat contacts.
    - Flush solenoid energized through closure of N.O. contacts K2-3/5 and drain valve N.O. contacts.
17. Tank water level drops below L probe.
    - ILR coil de-energizes.
        - HL coil energized on WLC board.
        - HL LED on WLC board lights.
18. Tank water level drops below LLCO probe.
    - Relay K2 de-energized through opening of WLC board LLCO N.O. contacts.
    - Fast fill solenoid energized through WLC (LLCO) N.C. contacts and N.C. contacts K2-5/1.
    - Flush solenoid remains energized through WLC (LLCO) N.C. contacts.
19. Time delay relay time elapses.
    - Power (120VAC) removed from output of time delay relay terminal 1.
    - All solenoids, coils and WLC board are de-energized.
    - Motorized drain valve de-energized. Drain valve closes.

DIAGRAMS

WIRING DIAGRAMS

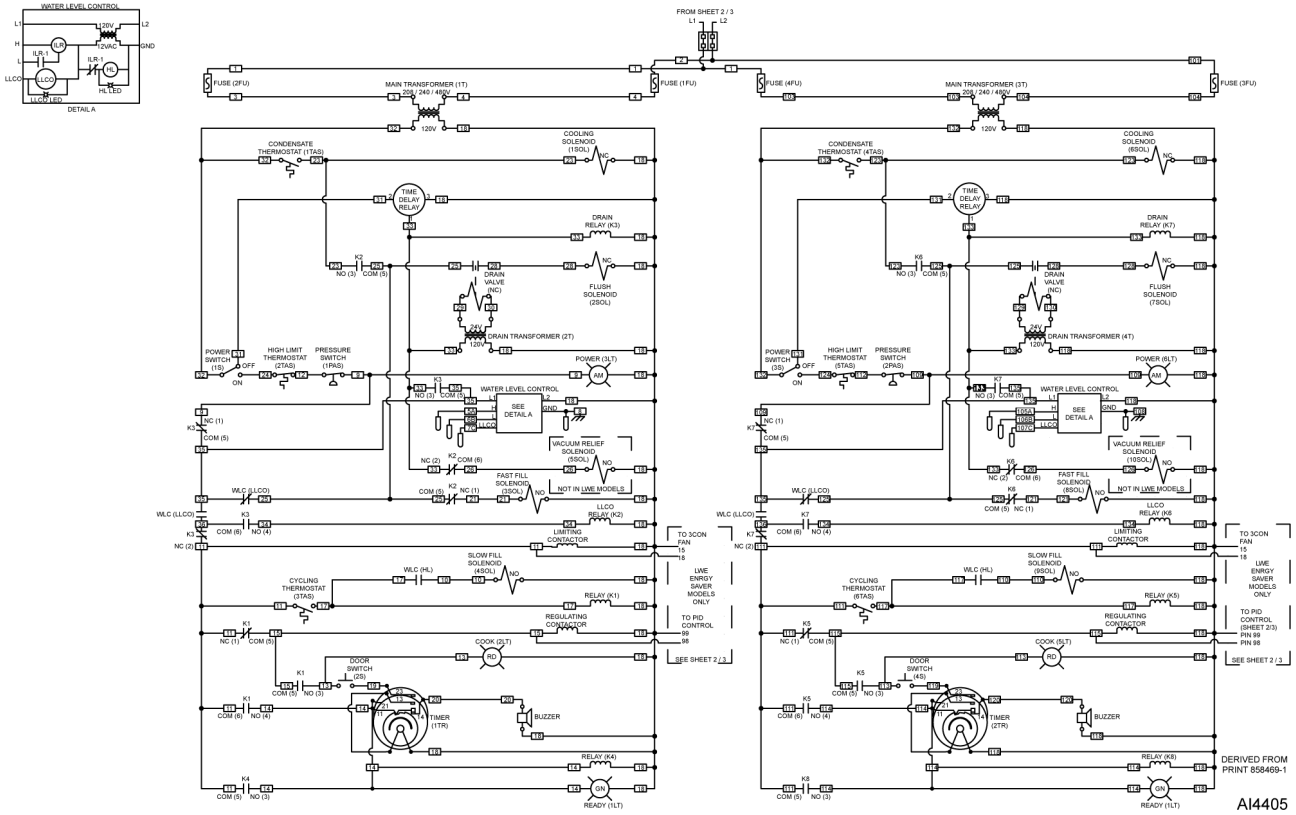

C24ET6 / 10 Wiring Diagram (Sheet 1)

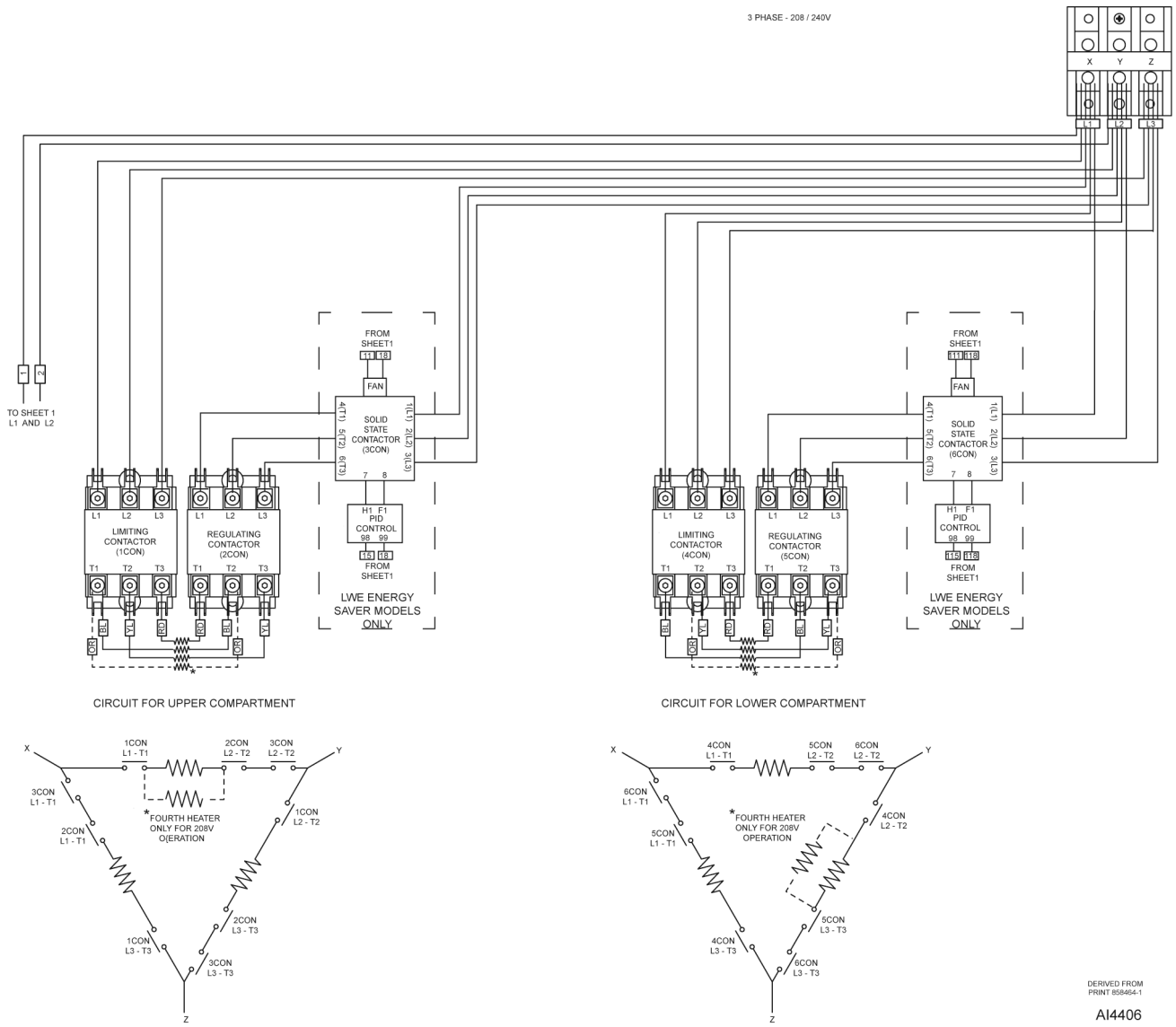

C24ET6 / 10 Wiring Diagram (Sheet 2)

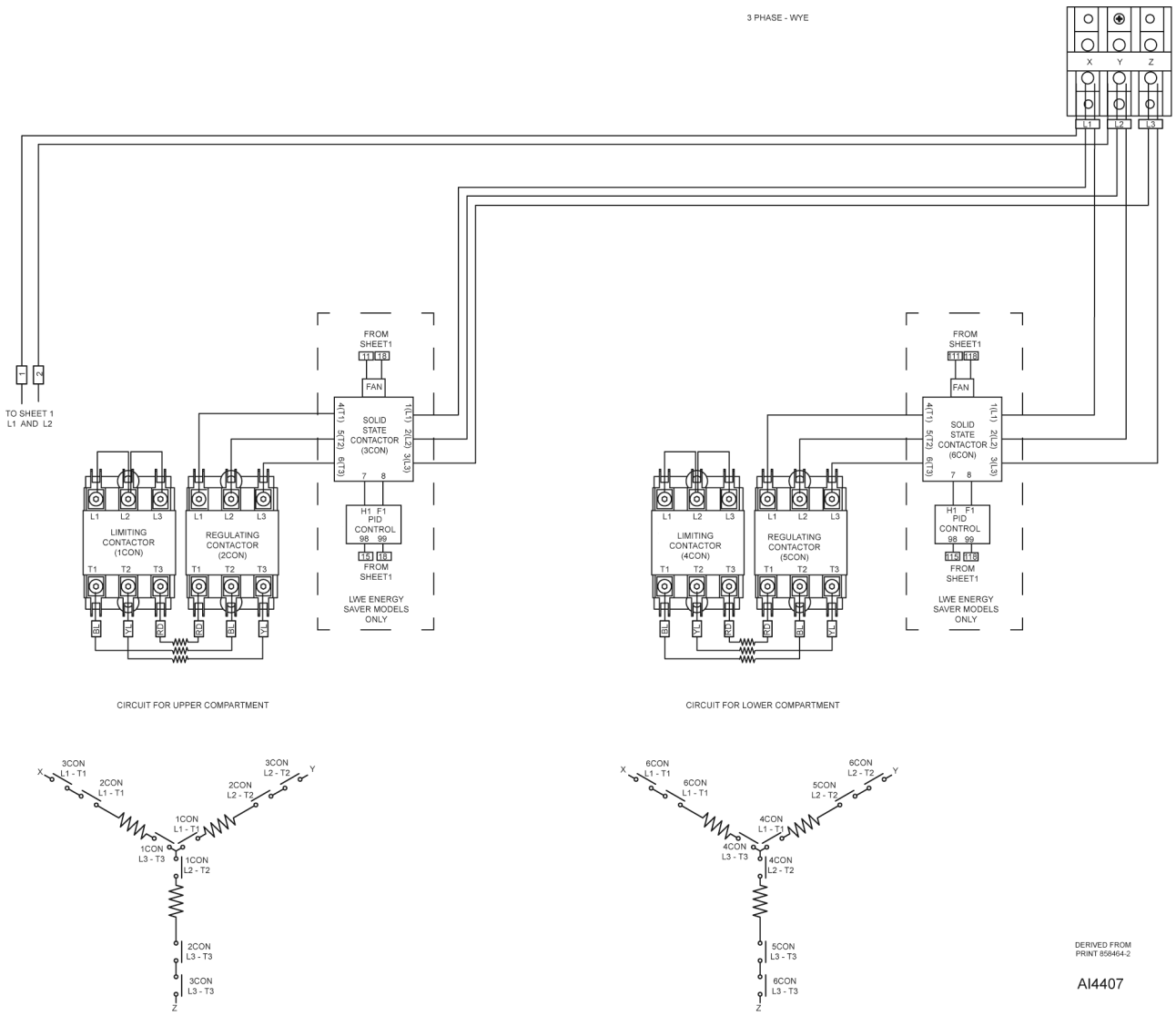

C24ET6 / 10 Wiring Diagram (Sheet 3)

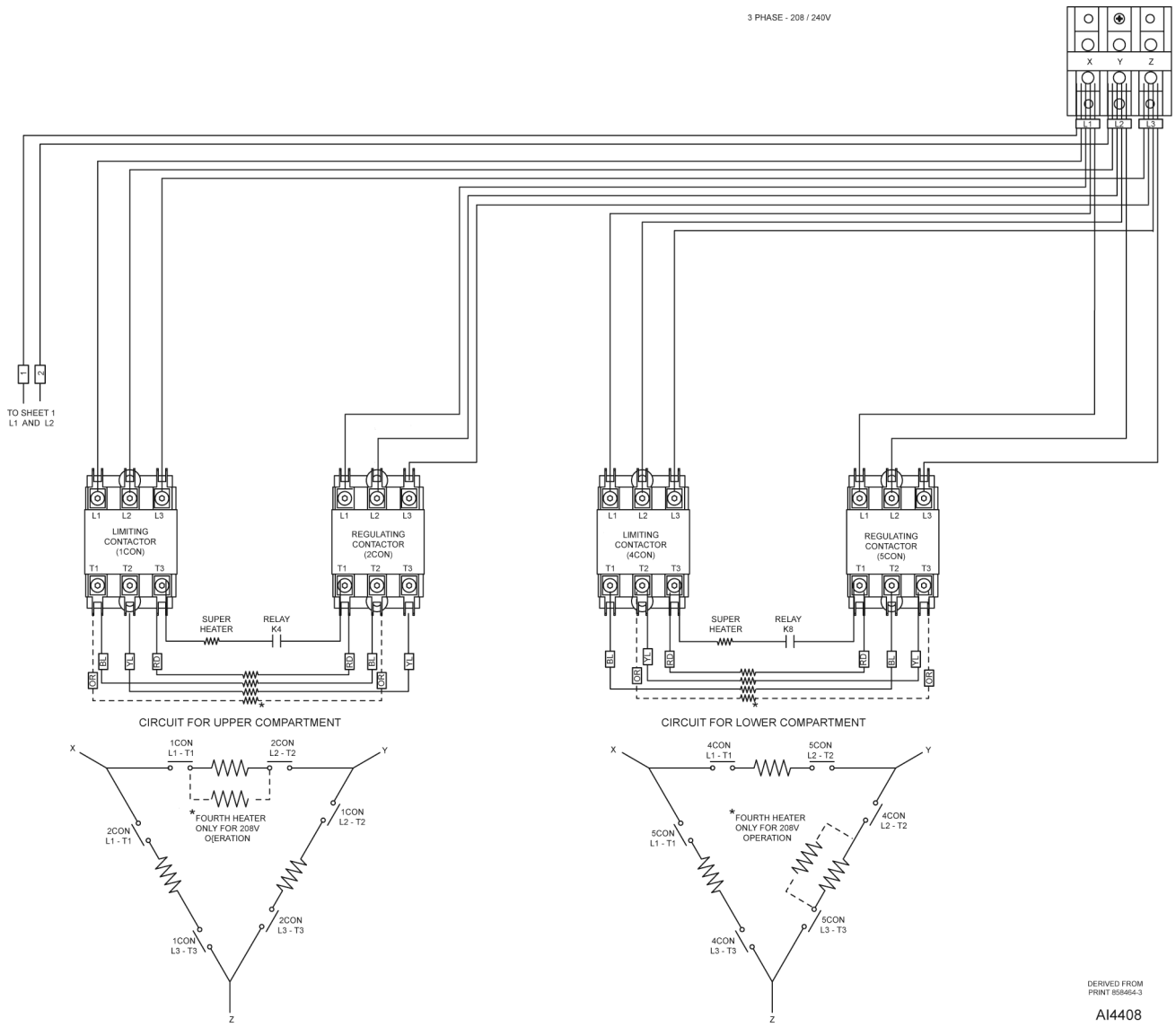

C24ET6 / 10 Wiring Diagram (Sheet 4)

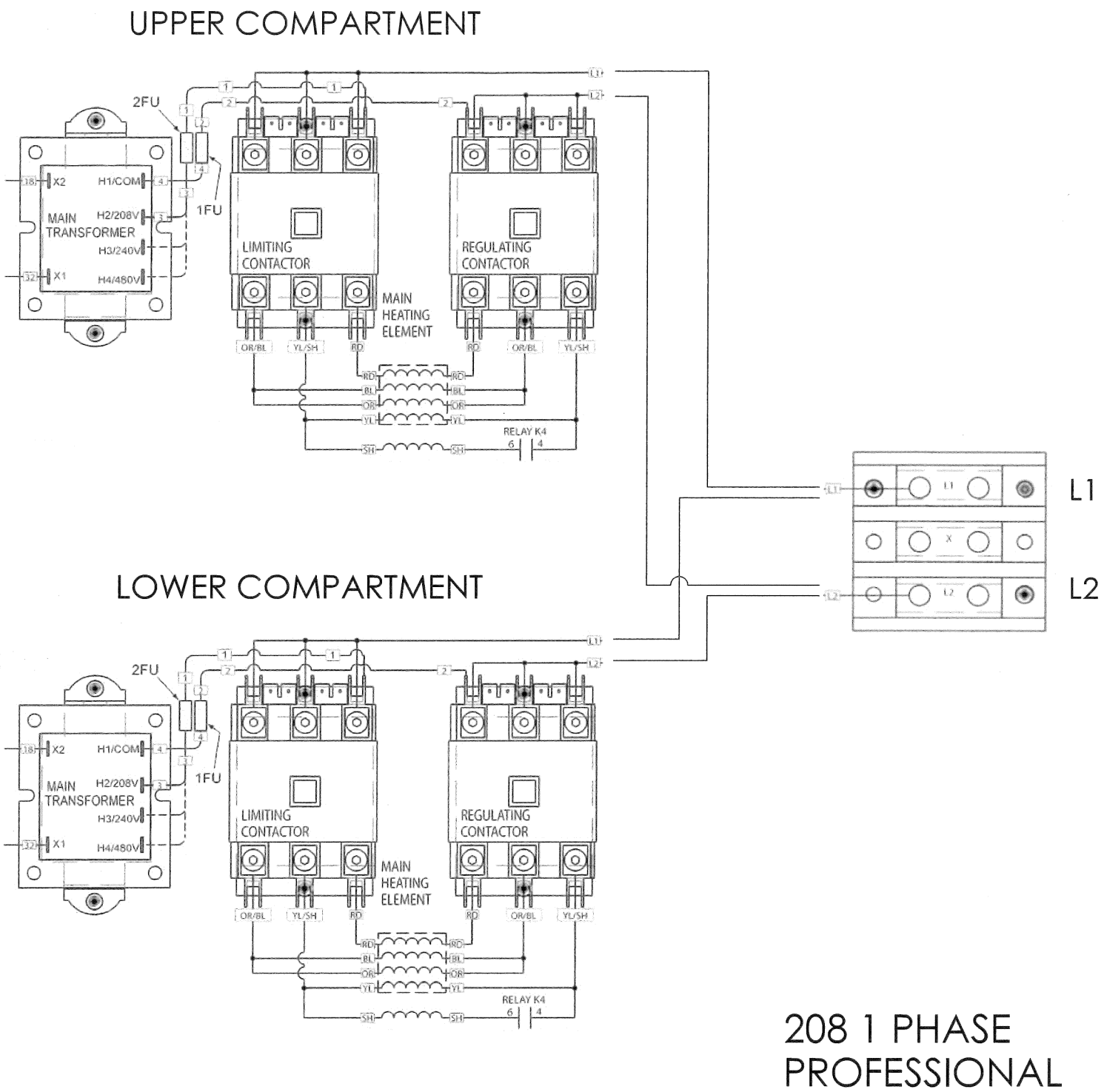

FIELD CONVERSION NOTES:

1) FOR 240V MACHINES, DISCONNECT AND CAP THE ORANGE WIRES OF THE MAIN HEATING ELEMENT AND CHANGE WIRE #3 TO THE CORRESPONDING VOLTAGE TAP (H3/240V) ON THE TRANSFORMER
2) FOR PLUS MACHINES, THERE IS NO SUPERHEATER

858764-1
REV. A1

WATER / STEAM DIAGRAM

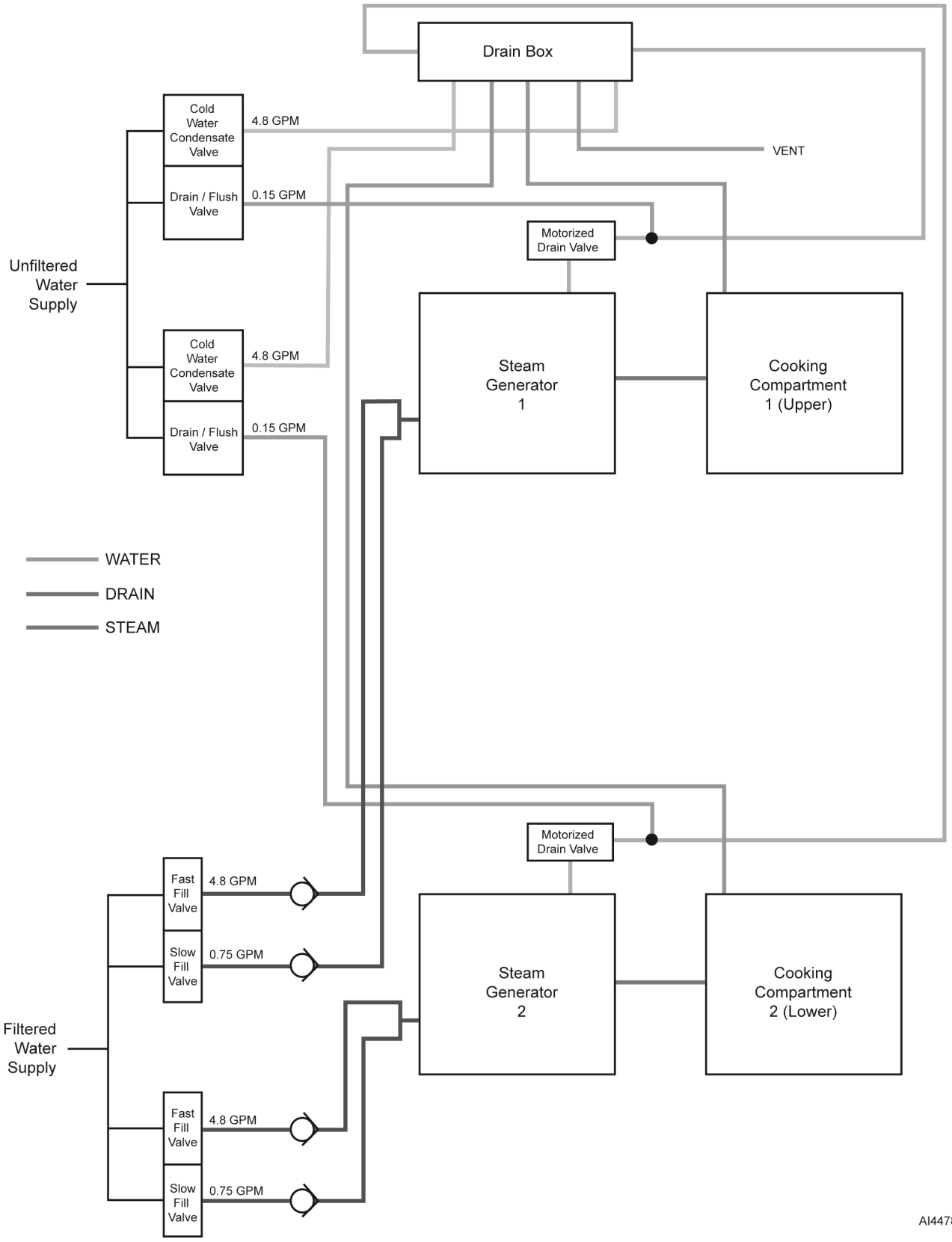

Fig. 77

TROUBLESHOOTING

ALL MODELS



⚠ WARNING

Certain procedures in this section require electrical test or measurements while power is applied to the machine. Exercise extreme caution at all times and follow Arc Flash procedures. If test points are not easily accessible, disconnect power and follow Lockout/Tagout procedures, attach test equipment and reapply power to test.

Refer to LWE MODEL for faults unique to the LWE models.

Symptom	Possible Causes
Compartment leaks water or steam around door.	• Unit not level. • Compartment drain screen obstructed. • Drain line obstructed, undersized, exceeds 6 feet or not to an open gap drain. • Door gasket worn or damaged. Refer to DOOR GASKET for removal procedure.
Cold water condenser not operating properly.	• Flush solenoid (2/5SOL) inoperative or plugged. • Lack of water supply. • Condensate thermostat (1/4TAS) stuck open. • Cooling solenoid (1/6SOL) valve inlet screen clogged or malfunction.
Steam generated inside cooking compartment when timer is off.	• High limit thermostat (2TAS) or related heat control circuit malfunction. • Relay K1/K5 malfunction.
Water or steam leaking inside panels.	• Steam generator gasket not sealing. • Loose clamps around steam hose or hose malfunction; or loose steam line plumbing connections. • Cooking compartment or steam generator malfunction.
Tank water level too high.	• Slow fill solenoid (4/9SOL) or fast fill solenoid (3/8SOL) does not shut off. • High level probe malfunction (open circuit). • Water Level Control (WLC) board inoperative .

Symptom	Possible Causes
Tank does not fill.	• Water supply not on. • Slow fill solenoid (4/9SOL) or fast fill solenoid (3/8SOL) not being energized or plugged. • WLC board malfunction. • Water level probes shorted to ground.
Heat coming on without water in tank.	• Dirty low level cut-off probe (shorted to ground) or low level cut-off probe wire grounded. • Limiting (1/4CON) or regulating contactor (2/5CON) malfunction. • WLC - LLCO contacts stuck closed. WLC board malfunction.
Steamer will not heat.	• No incoming voltage (circuit breaker tripped or fuses open). • Tank not filled (supply water off; fast fill solenoid clogged or malfunction). • Power switch malfunction. • WLC board malfunction. • Relay (K1/K5) malfunction. • High-limit thermostat open (2/5TAS). • Heating elements inoperative (open circuit). • Limiting contactor (1/4CON) or regulating contactor (2/5CON) malfunction. • Hold thermostat open (3/6TAS). • Relay (K3/7) malfunction. • Water too pure for probes to properly conduct electricity.
Timer motor does not run.	• Relay K1/K5-6/4 contacts not closing. • Timer malfunction.
Water running out of drain during fill.	• Motorized drain valve stuck open. • Time delay relay malfunction. • Condensate thermostat (1/4TAS) malfunction.
Door not closing properly.	• Door latch assembly. • Striker adjustment.
Door won’t open.	Latch won’t release. Refer to DOOR LATCH ADJUSTMENT.
Buzzer not operating.	• Timer malfunction. • Buzzer malfunction.

LWE MODEL



⚠ WARNING

Certain procedures in this section require electrical test or measurements while power is applied to the machine. Exercise extreme caution at all times and follow Arc Flash procedures. If test points are not easily accessible, disconnect power and follow Lockout/Tagout procedures, attach test equipment and reapply power to test.

This section applies only to LWE model specific faults. Refer to ALL MODELS for general troubleshooting.

Symptom	Possible Causes
Steamer will not heat.	• PID controller malfunction. • Solid state contactor (3/6CON) malfunction. • Sensor probe open or disconnected from PID controller. Display cycles between: 1. Top row "----" and "Er.i1". 2. Bottom row "Attn" and "0.0".