VULCAN

# CATALOG OF REPLACEMENT PARTS

## GL SERIES KETTLES




**For additional information on Vulcan Company or to locate an authorized parts and service provider in your area, visit our website at www.vulcanequipment.com**

VULCAN
DIVISION OF ITW FOOD EQUIPMENT GROUP, LLC
WWW.VULCANEQUIPMENT.COM

3600 NORTH POINT BLVD.
BALTIMORE, MD 21222

F-43393 Rev. A (March 2023)

 © VULCAN-HART COMPANY 2023

## Table of Contents

5 CONTROL BOX
7 BURNER CHAMBER
9 LOW WATER CUTOFF
11 FILL ASSEMBLY
13 PRESSURE RELIEF VALVE
15 PLUG VALVE (2 INCH)
17 FLUE
19 LID AND HANDLE ASSEMBLY

| | | |
|---|---|---|
| 9 | 00-438131-00021 | Label - Warning |
| 10 | 00-857426-00001 | Label - Cleaning |
| 11 | 00-908805 | Label - Ground Warning |
| 12 | 00-422317-00001 | Label - Vulcan |
| 13 | 00-833220 | Thermostat |
| 14 | 00-845647-00001 | Knob - Control |

**PARTS NOT ILLUSTRATED**

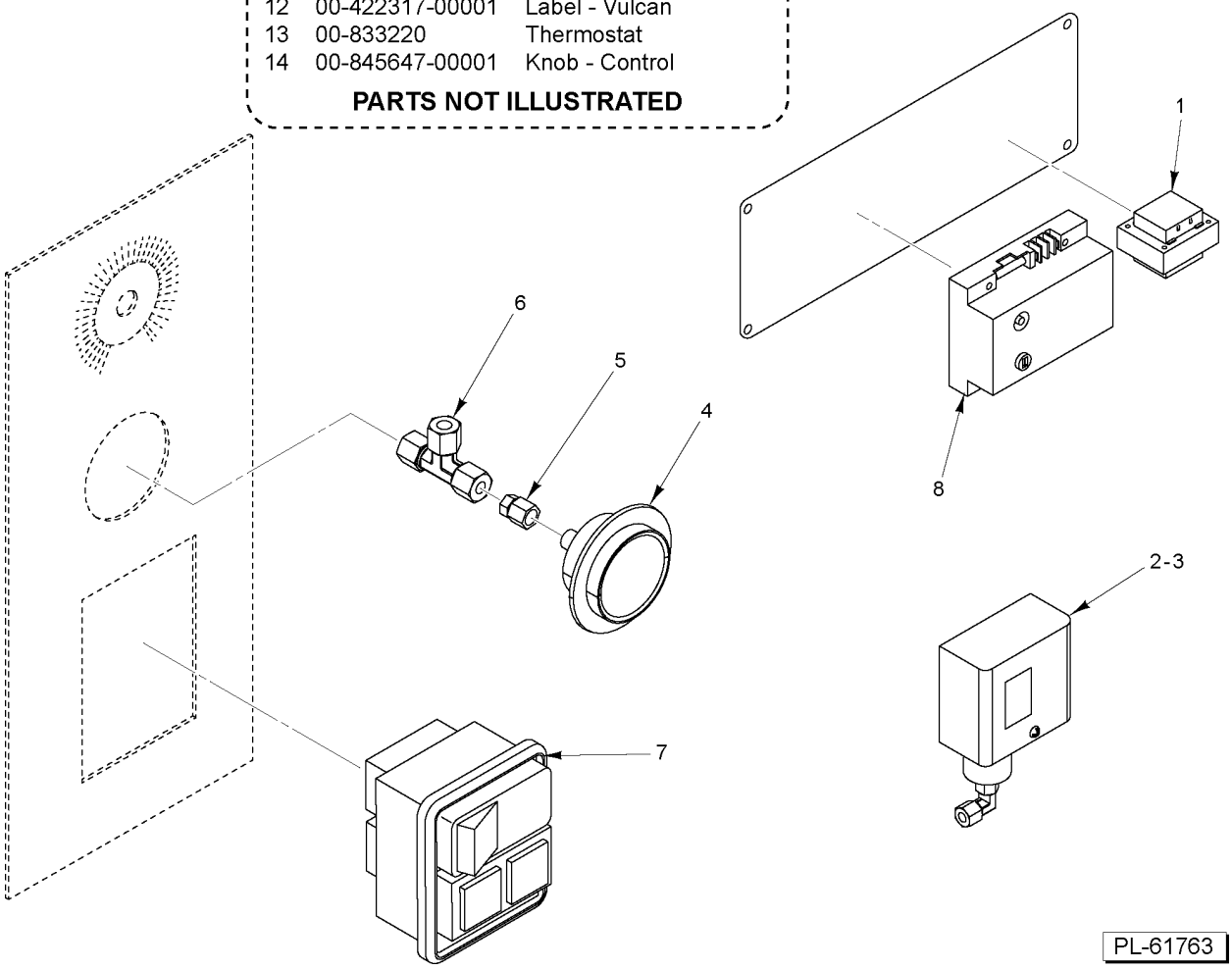


## CONTROL BOX

## CONTROL BOX

| ILLUS. PL-61763 | PART NO. | NAME OF PART | AMT. |
|---|---|---|---|
| 1 | 00-411500-00012 | Transformer (120 VAC, 24 V., 40 VA) | 1 |
| 2 | 00-833488 | Switch - Pressure Limit | 1 |
| 3 | 00-854468-00001 | Bracket | 1 |
| 4 | 00-833152 | Gauge - Pressure | 1 |
| 5 | FP-081-74 | Tee 1/4 Tube | 1 |
| 6 | FP-012-10 | Fitting - Tube 1/4 (Brass) | 1 |
| 7 | 00-855002-00001 | Power Switch W/Indicator Light (Oct., 2003 to Present) Switch Assy | 1 |
| 8 | 00-858480-00001 | Module - Ignition | 1 |
| 9 | 00-438131-00021 | Label - Warning | 1 |
| 10 | 00-857426-00001 | Label - Cleaning | 1 |
| 11 | 00-908805 | Label - Ground Warning | 1 |
| 12 | 00-422317-00001 | Label - Vulcan | 1 |
| 13 | 00-833220 | Thermostat (Electric Control) | 1 |
| 14 | 00-854647-00001 | Knob - Control | 1 |

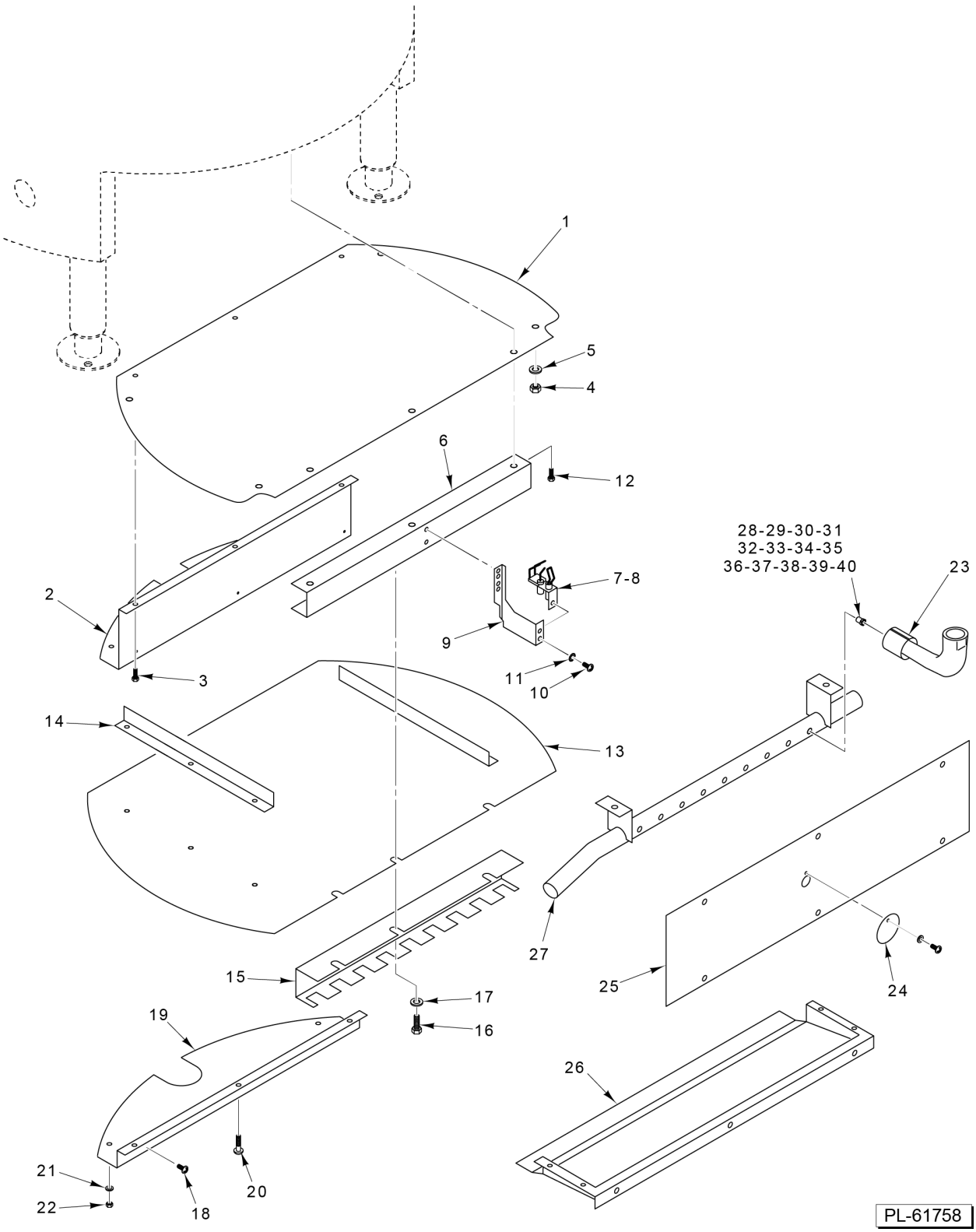


**BURNER CHAMBER**

## BURNER CHAMBER

| ILLUS. PL-61758 | PART NO. | NAME OF PART | AMT. |
|---|---|---|---|
| 1 | 00-832907 | Chamber | 1 |
| 2 | 00-832912 | Baffle - Flue | 1 |
| 3 | SC-036-14 | Cap Screw 1/4-20 x 1/2 Hex Hd | 3 |
| 4 | NS-013-22 | Nut 3/8-16 Hex | 6 |
| 5 | WS-017-06 | Washer (SST) | 5 |
| 6 | 00-832914 | Support - Burner | 1 |
| 7 | 00-856615-00001 | Pilot - Burner (Electronic Ignition) (NAT) | 1 |
| 8 | 00-856615-00002 | Pilot - Burner (Electronic Ignition) (LP) | 1 |
| 9 | 00-842998 | Bracket - Pilot | 1 |
| 10 | SC-110-87 | Mach. Screw #10-32 x 1/4 Phil. Pan Hd | 2 |
| 11 | WL-010-06 | Lockwasher #10 External Shakeproof | 2 |
| 12 | SC-036-14 | Cap Screw 1/4-20 x 1/2 Hex Hd | 5 |
| 13 | 00-832913 | Bottom | 1 |
| 14 | 00-832889 | Angle | 2 |
| 15 | 00-834020 | Support - Burner | 1 |
| 16 | SC-036-14 | Cap Screw 1/4-20 x 1/2 Hex Hd | 9 |
| 17 | WS-017-06 | Washer (SST) | 9 |
| 18 | SD-008-18 | Self-Tapping Screw 8-18 x 3/8 Phil. Bndg. Hd., Type B | 3 |
| 19 | 00-832911 | Cover - Flue Baffle | 1 |
| 20 | SD-008-18 | Self-Tapping Screw 8-18 x 3/8 Phil. Bndg. Hd., Type B | 3 |
| 21 | WS-017-06 | Washer (SST) | 2 |
| 22 | NS-046-38 | Nut 1/4-20 Hex (SST) | 2 |
| 23 | 00-833076-00001 | Main Burner Assy. (LP and Nat. Gas) | 9 |
| 24 | 00-832895 | Inspection Hole Cover | 1 |
| 25 | 00-833079-00005 | Bolt-in Panel | 1 |
| 26 | 00-834028-00001 | Shield - Bottom | 1 |
| 27 | 00-832941 | Manifold - Gas | 1 |
| 28 | 00-800665-00025 | Orifice #49 (NAT) (0-2000 Ft.) | 9 |
| 29 | 00-800665-00015 | Orifice #50 (NAT) (2001-4499 Ft,) | 9 |
| 30 | 00-800665-00026 | Orifice #51 (NAT) (4500-7499 Ft.) | 9 |
| 31 | 00-800665-00036 | Orifice #52 (NAT) (7500 - 9499 Ft.) | 9 |
| 32 | 00-800665-00027 | Orifice #53 (NAT) (9500 - 10500 Ft.) | 9 |
| 33 | 00-800665-00012 | Orifice #57 (LP) (0-2000 Ft.) | 9 |
| 34 | 00-800665-00014 | Orifice #58 (LP) (2001 - 2499 Ft.) | 9 |
| 35 | 00-800665-00029 | Orifice #59 (LP) (2500 - 4499 Ft.) | 9 |
| 36 | 00-800665-00040 | Orifice #60 (LP) (4500 - 5499 Ft.) | 9 |
| 37 | 00-800665-00041 | Orifice #61 (LP) (5500 - 7499 Ft.) | 9 |
| 38 | 00-800665-00042 | Orifice #62 (LP) (7500 - 8499 Ft.) | 9 |
| 39 | 00-800665-00043 | Orifice #63 (LP) (8500 - 9499 Ft.) | 9 |
| 40 | 00-800665-00044 | Orifice #64 (LP) (9500 - 10500 Ft.) | 9 |

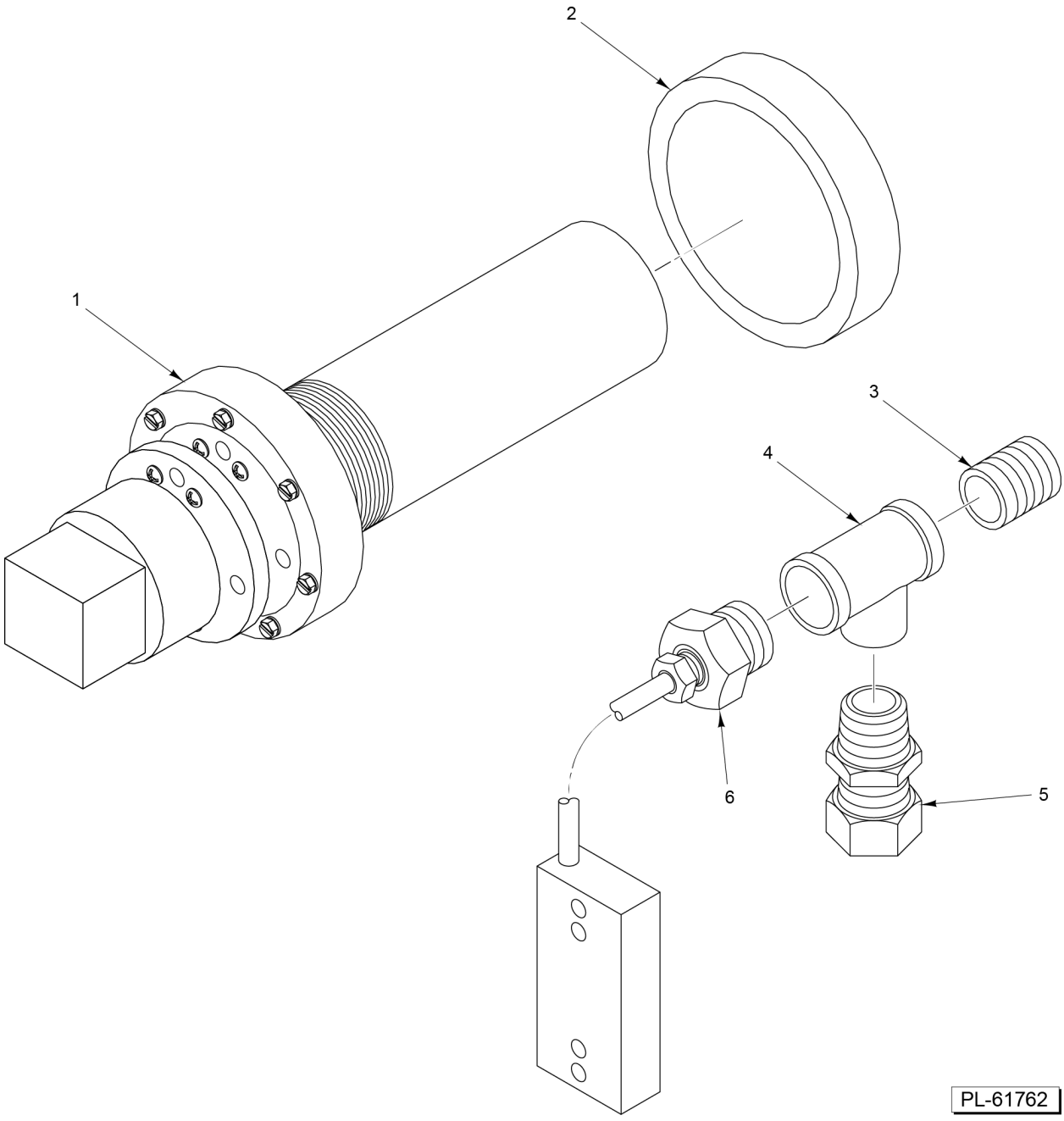


**LOW WATER CUTOFF**

## LOW WATER CUTOFF

| ILLUS. PL-61762 | PART NO. | NAME OF PART | AMT. |
|---|---|---|---|
| 1 | 00-880030 | Low Water Cut-off (Complete) | 1 |
| 2 | 00-841826 | Insulation | 1 |
| 3 | FP-035-46 | Pipe 3/8 x 1 Lg. TBE | 1 |
| 4 | FP-077-99 | Tee 3/8 x 3/8 x 1/4 | 1 |
| 5 | FP-047-23 | Connector - Male 1/4 Tube to 1/4 Pipe | 1 |
| 6 | 00-833220 | Thermostat (Electric Control) | 1 |

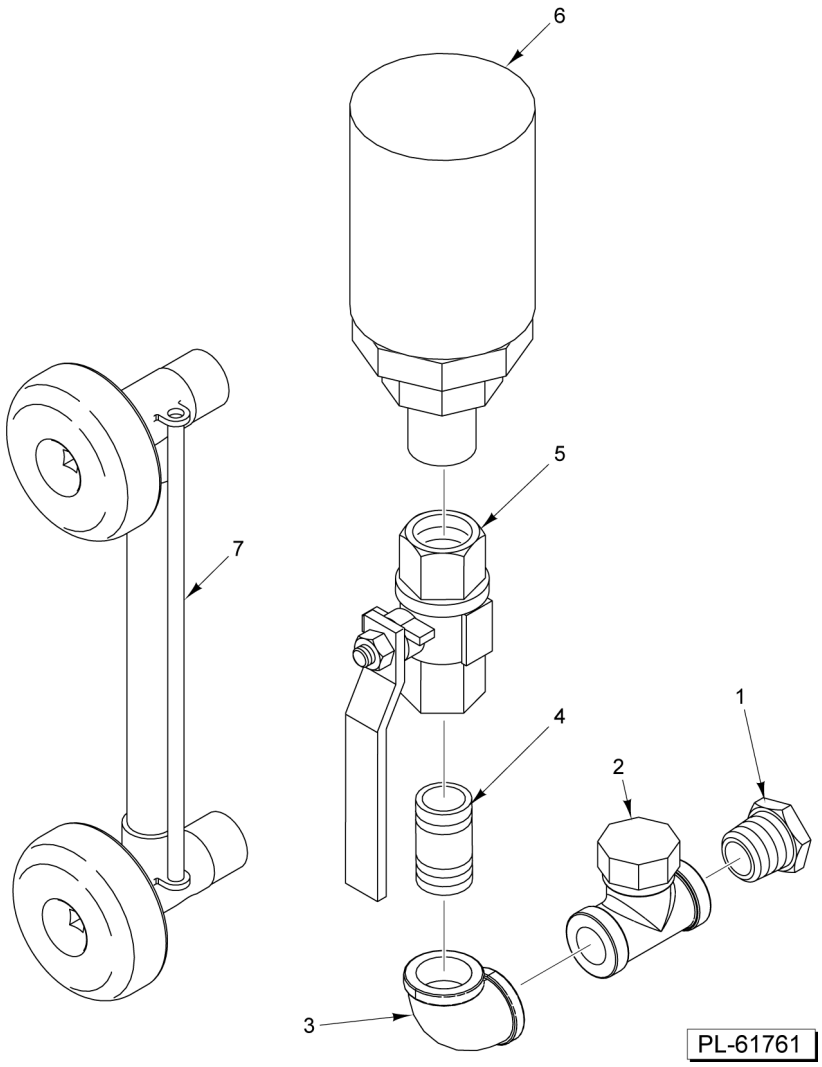


**FILL ASSEMBLY**

## FILL ASSEMBLY

| ILLUS. PL-61761 | PART NO. | NAME OF PART | AMT. |
|---|---|---|---|
| 1 | FP-040-42 | Pipe 1/2 x 1-1/8 TBE (Brass) | 1 |
| 2 | 00-833648-00002 | Valve - Swing Check 1/2" (Brass) | 1 |
| 3 | FP-015-17 | Elbow - Pipe 1/2 x 90 Deg. (Brass) | 1 |
| 4 | FP-054-08 | Pipe 1/2 x 1-1/8 TBE (SST) | 1 |
| 5 | 00-858008-00001 | Valve - Ball 1/2 In | 1 |
| 6 | 00-858635-00001 | Fill Tube Assy | 1 |
| 7 | 00-833493 | Gauge Glass Assy. (Complete) | 1 |

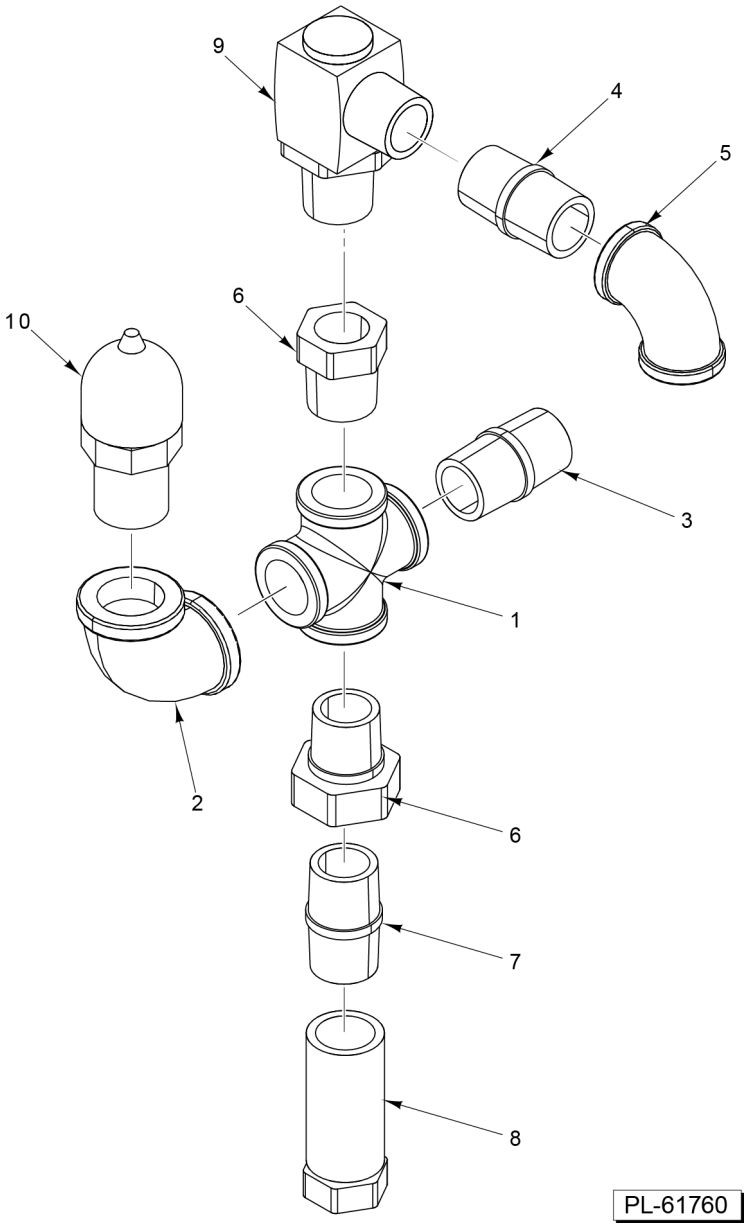


**PRESSURE RELIEF VALVE**

## PRESSURE RELIEF VALVE

| ILLUS. PL-61760 | PART NO. | NAME OF PART | AMT. |
|---|---|---|---|
| 1 | FP-083-92 | Cross 3/4" | 1 |
| 2 | FP-015-24 | Elbow - Pipe 3/4 x 90 Deg. (Brass) | 1 |
| 3 | FP-041-50 | Pipe 3/4 x 1-3/8 TBE (Brass) | 1 |
| 4 | FP-040-42 | Pipe 1/2 x 1-1/8 TBE (Brass) | 1 |
| 5 | FP-015-16 | Elbow - Pipe 1/2 x 90 Deg. (Brass) | 1 |
| 6 | FP-027-22 | Bushing - Pipe 3/4 to 1/2 (Brass) | 2 |
| 7 | FP-054-08 | Pipe 1/2 x 1-1/8 TBE (SST) | 1 |
| 8 | 00-833238 | Vacuum Breaking Check Valve, 1/2" | 1 |
| 9 | 00-841496-00001 | Pressure Relief Valve 1/2" (15#) | 1 |
| 10 | 00-833239 | Air Vent 3/4" | 1 |

| | | |
|---|---|---|
| 8 | 00-856569-00002 | Plate - Valve Mount |
| 9 | 00-855830-00001 | Gasket - Draw-Off Valve |

**PARTS NOT ILLUSTRATED**

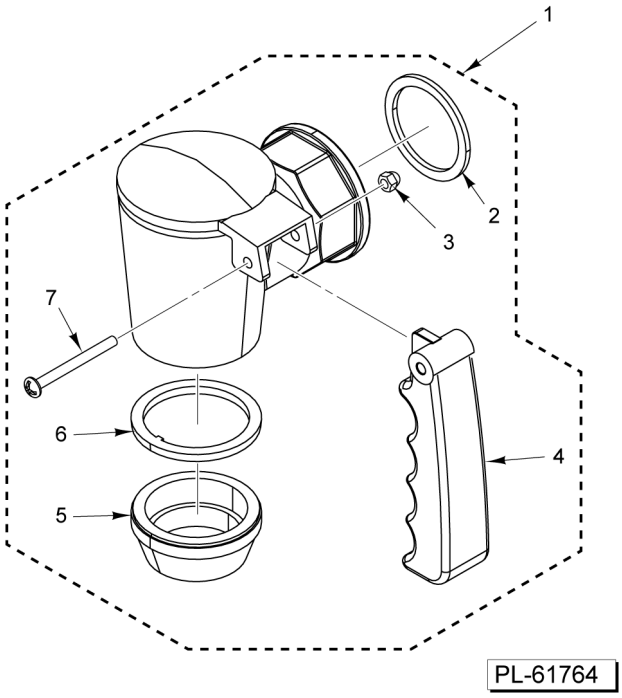


**PLUG VALVE**
**(2 INCH)**

## PLUG VALVE
## (2 INCH)

| ILLUS. PL-61764 | PART NO. | NAME OF PART | AMT. |
|---|---|---|---|
| 1 | 00-858268-00001 | Draw-Off Valve Assy. 2 In | 1 |
| 2 | 00-858268-00009 | Gasket | 1 |
| 3 | 00-858268-00010 | Nut, M6 (SST) | 1 |
| 4 | 00-858268-00006 | Handle | 1 |
| 5 | 00-858268-00003 | Nut, Valve Plug | 1 |
| 6 | 00-858268-00004 | Washer | 1 |
| 7 | 00-858268-00007 | Screw M6 x 50 | 1 |
| 8 | 00-856569-00002 | Plate - Valve Mount | 1 |
| 9 | 00-855830-00001 | Gasket - Draw-Off Valve | 1 |

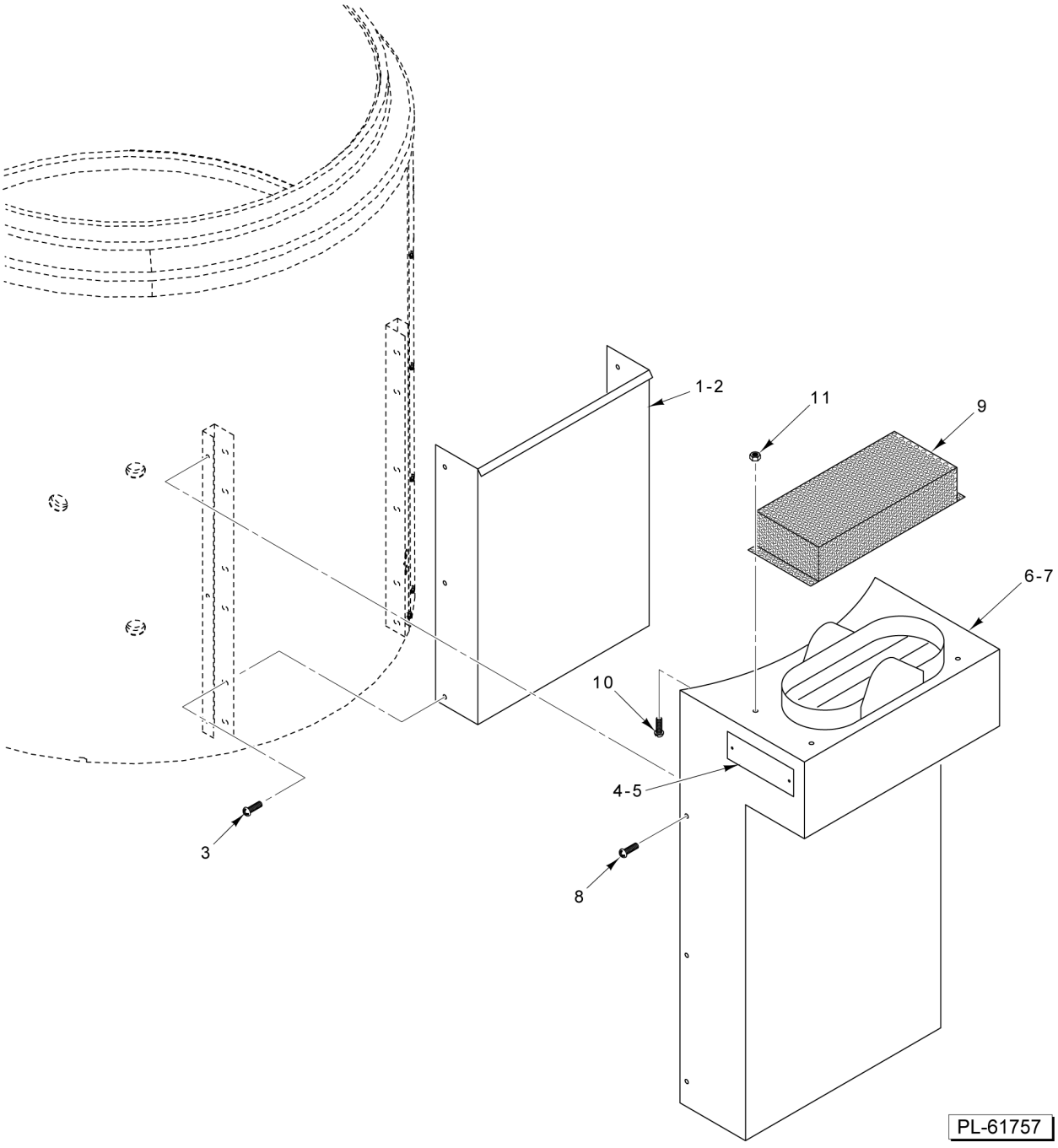


**FLUE**

## FLUE

| ILLUS. PL-61757 | PART NO. | NAME OF PART | AMT. |
|---|---|---|---|
| 1 | 00-834037-00013 | Duct - Flue (29 In.) | 1 |
| 2 | 00-834037-00015 | Duct - Flue (36 In.) | 1 |
| 3 | SD-008-18 | Self-Tapping Screw 8-18 x 3/8 Phil. Bndg. Hd., Type B | 6 |
| 4 | 00-836812 | Plate - Warning | 1 |
| 5 | RS-030-09 | Rivet | 2 |
| 6 | 00-834042-00003 | Shell - Outer Assy | 1 |
| 7 | 00-834042-00005 | Shell - Outer Assy | 1 |
| 8 | SC-053-05 | Mach. Screw 10-24 x 3/8 Slotted Truss Hd. (SST) | 6 |
| 9 | 00-358610 | Cover - Flue | 1 |
| 10 | SC-121-34 | Mach. Screw 10-24 x 1/2 (pin-in-hex) Button Hd | 4 |
| 11 | NS-011-18 | Nut 10-24 Hex (SST) | 4 |

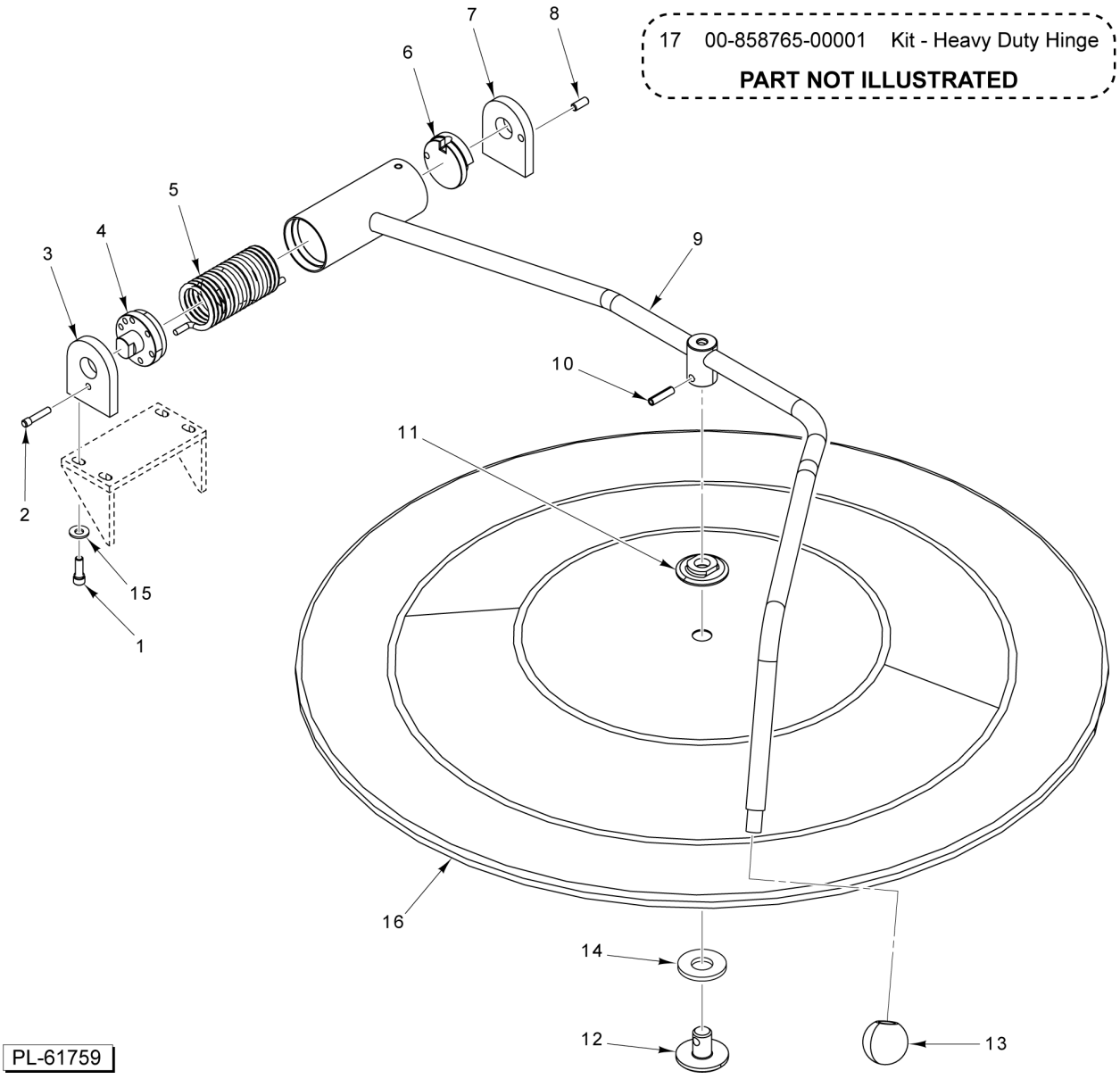


## LID AND HANDLE ASSEMBLY

## LID AND HANDLE ASSEMBLY

| ILLUS. PL-61759 | PART NO. | NAME OF PART | AMT. |
|---|---|---|---|
| 1 | SC-110-98 | Cap Screw 1/4-20 x 3/4 Hex Socket Hd. (SST) | 4 |
| 2 | 00-853284-00001 | Pin - Lock | 1 |
| 3 | 00-857777-00001 | Plate - Hinge (LH) | 1 |
| 4 | 00-853292-00001 | Disc - Tension Adjustment | 1 |
| 5 | 00-853289-00001 | Spring - Torsion | 1 |
| 6 | 00-853293-00001 | Disc - Rotary Stop | 1 |
| 7 | 00-857779-00001 | Plate - Hinge (Incls. Item 8) | 1 |
| 8 | 00-855221-00001 | Pin - Stop | 1 |
| 9 | 00-853279-00001 | Cover Handle (36") (Spring Assist Cover) | 1 |
| 10 | RP-004-31 | Roll Pin 1/4 x 1 | 1 |
| 11 | 00-853568-00001 | Nut - Kettle Cover | 1 |
| 12 | 00-853567-00001 | Rocker - Kettle Cover | 1 |
| 13 | 00-853285-00001 | Knob - Press On | 1 |
| 14 | OR-001-07 | "O" Ring (Per Standard 016) | 1 |
| 15 | WL-006-17 | Lockwasher 1/4 Helical (SST) | 1 |
| 16 | 00-853281-00001 | Cover w/ Condesate Ring | 1 |
| 17 | 00-858765-00001 | Kit - Heavy Duty Hinge | AR |