# INSTALLATION INSTRUCTIONS
## STEAMER REPLACEMENT TIMER Kit # 00-913102-0176A

### OBSOLETE

**NOTE:** You will receive either the Mallory or Precision Timer in the kit. Both timers work on all models. Timers are wired similarly with some differences.

**Precision Timer (1) Shown in Fig. 1**

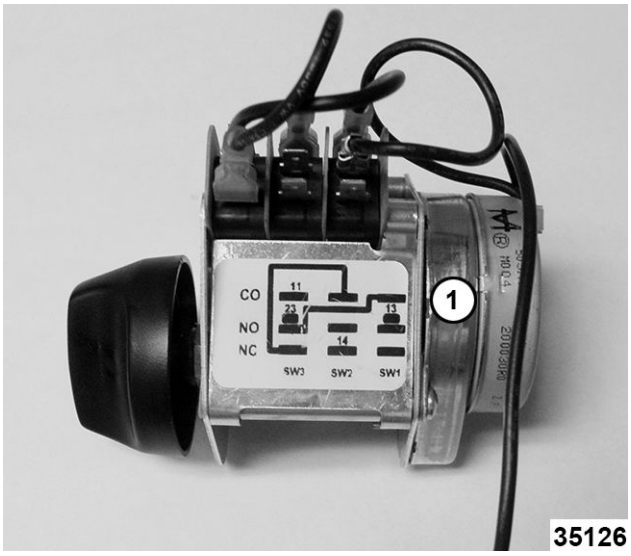


**Fig. 1**

**Mallory Timer (2) Shown in Fig. 2**




**Fig. 2**

| Part Number | Description | QTY |
|---|---|---|
| 00-856621-00001 | Mallory Timer | 1 (if applicable) |
| 00-858593-00001 | Precision Timer (Countertop Models) | 1 (if applicable) |
| 00-854693-00001 | Shaft, Rotary Seal | 1 |
| 00-856773-00001 | Knob, Timer | 1 |
| 00-833652 | Lubricant, Petro-Gel, 4 oz. | 1 |




**⚠ WARNING**

**Disconnect the electrical power to the machine and follow lockout / tagout procedures.**

1. Remove Right side panel.
   A. Remove screws from bottom of panel.




**Fig. 3.**

B. Pull bottom of panel out and slide down to clear top cover.

2. Note and disconnect timer wiring and remove old timer.

**NOTICE**

Handle new timer with care not to touch cams or switch levers with hands or tools. Do not remove any jumper wires on the Precision brand timer.

3. Connect new timer wiring.

**MODELS C24EA6/10, OR C24GA6/10 - REFER TO: Fig. 3**

**NOTE:** Upper and lower indicate to which compartment the timer is being installed.

A. Wire # 6 (RED) on Upper (1, Timer terminal 11)

B. Wire # 9 (BLUE) on Lower (1, Timer terminal 11)

C. Wire # 27 (WH) on Upper (2, Timer motor)

D. Wire # 30 (WH) on Lower (2, Timer motor)

E. Wire # 12 (BRN) on Upper (3, Timer terminal 14)

F. Wire # 14 (BRN) on Lower (3, Timer terminal 14)

G. Wire #15 (ORG) on Upper (4, Timer terminal 23)

H. Wire #20 (YEL) on Lower (4, Timer terminal 23)

I. Wire on timer terminal #21 should be taped off and insulated.

**NOTE:** Wire on terminal #21 is not used on the Precision Timer with exposed micro switches.

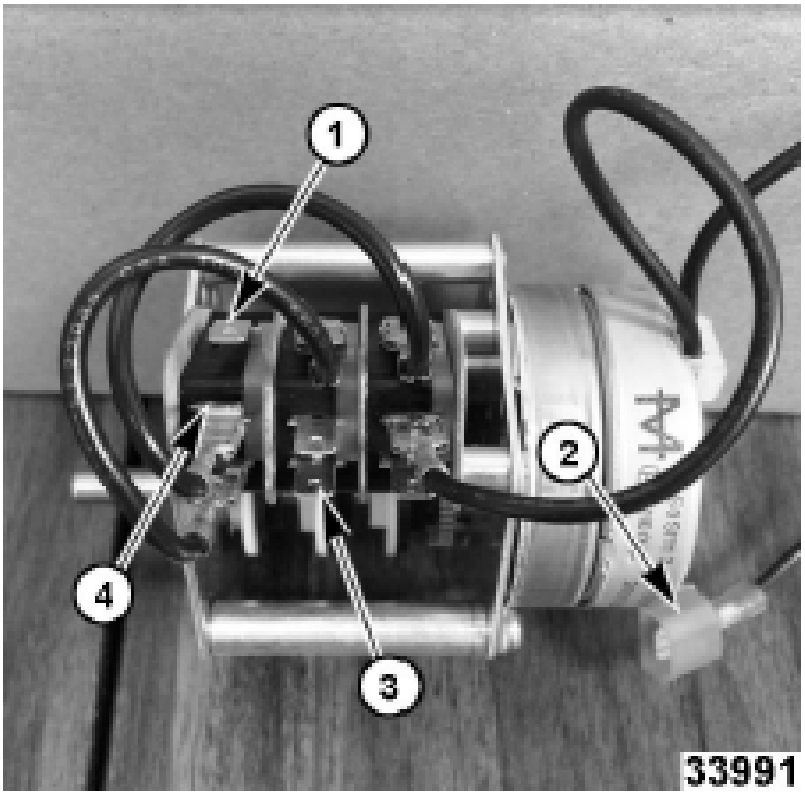


**Fig. 4**.

**MODELS C24EA3/5, HC24EA3/5, C24EO3/5, HC24EO3/5 - REFER TO: Fig. 4**

A. Wire # 14 (RED) (1, Timer terminal 11)

**NOTE:** PRO MODEL ONLY: Insulate one #14 terminal connection. PRO model requires only one terminal connection for #14.

B. Wire # 18 (2, Timer Motor)

C. Wire # 20 (3, Timer terminal 14)

D. Wire # 19 (4, Timer terminal 23)

E. Wire on terminal #21 should be taped off and insulated.

**NOTE:** Wire on terminal #21 is not used on the Precision Timer with exposed micro switches.

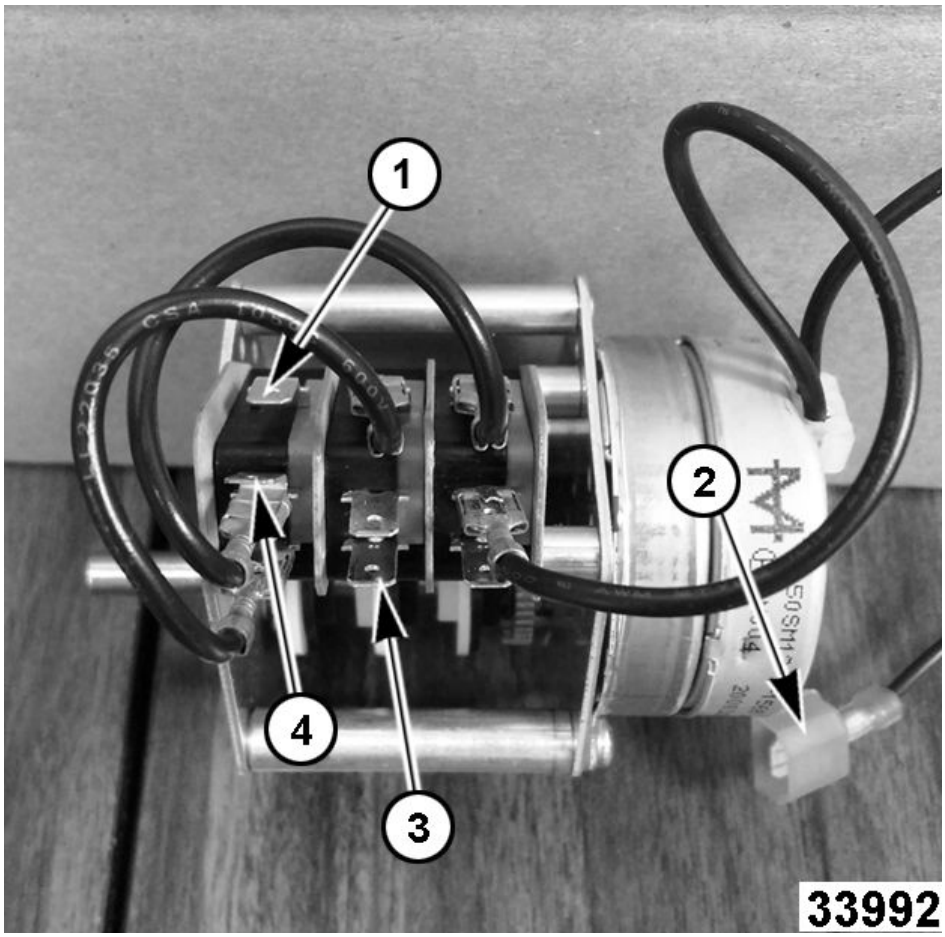


**Fig. 5**

4. Verify the orientation nub on front face of timer engages the small hole on back side of steamer front panel.
5. Secure shaft to steamer panel using new seal nut in kit.

**NOTICE**

Torque seal nut up to, but not over 15 in. lbs.

6. Install right side panel.
7. Restore power to steamer.
8. Check timer operation.
   A. Turn steamer on.
   B. Set timer on 5 minutes when steamer is ready to cook.
   C. Verify

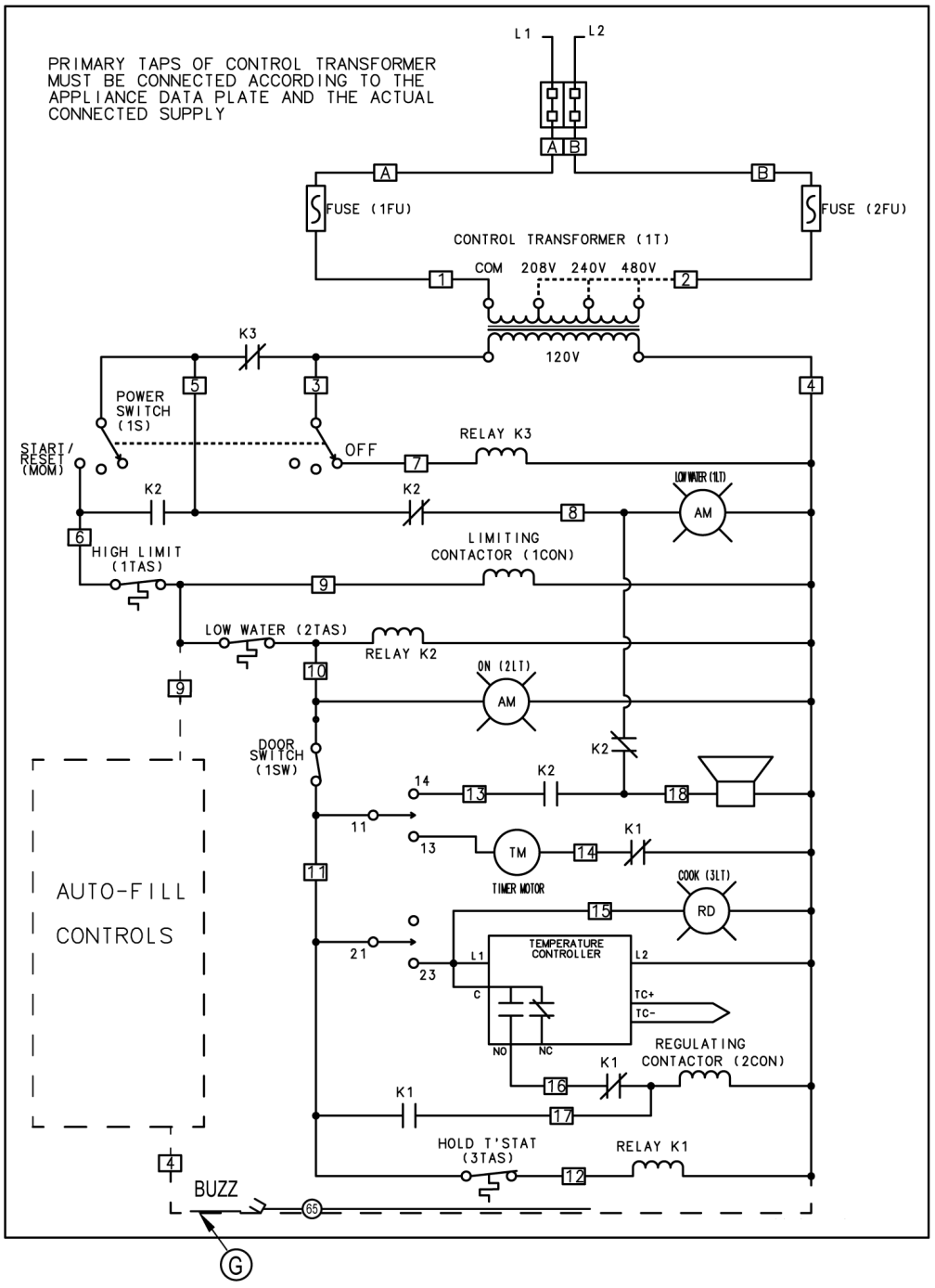


C24EO3/5 and HC24EO3/5 Models - WIRING DIAGRAM
DERIVED FROM 00-857590-00001 Rev C2

AI5320

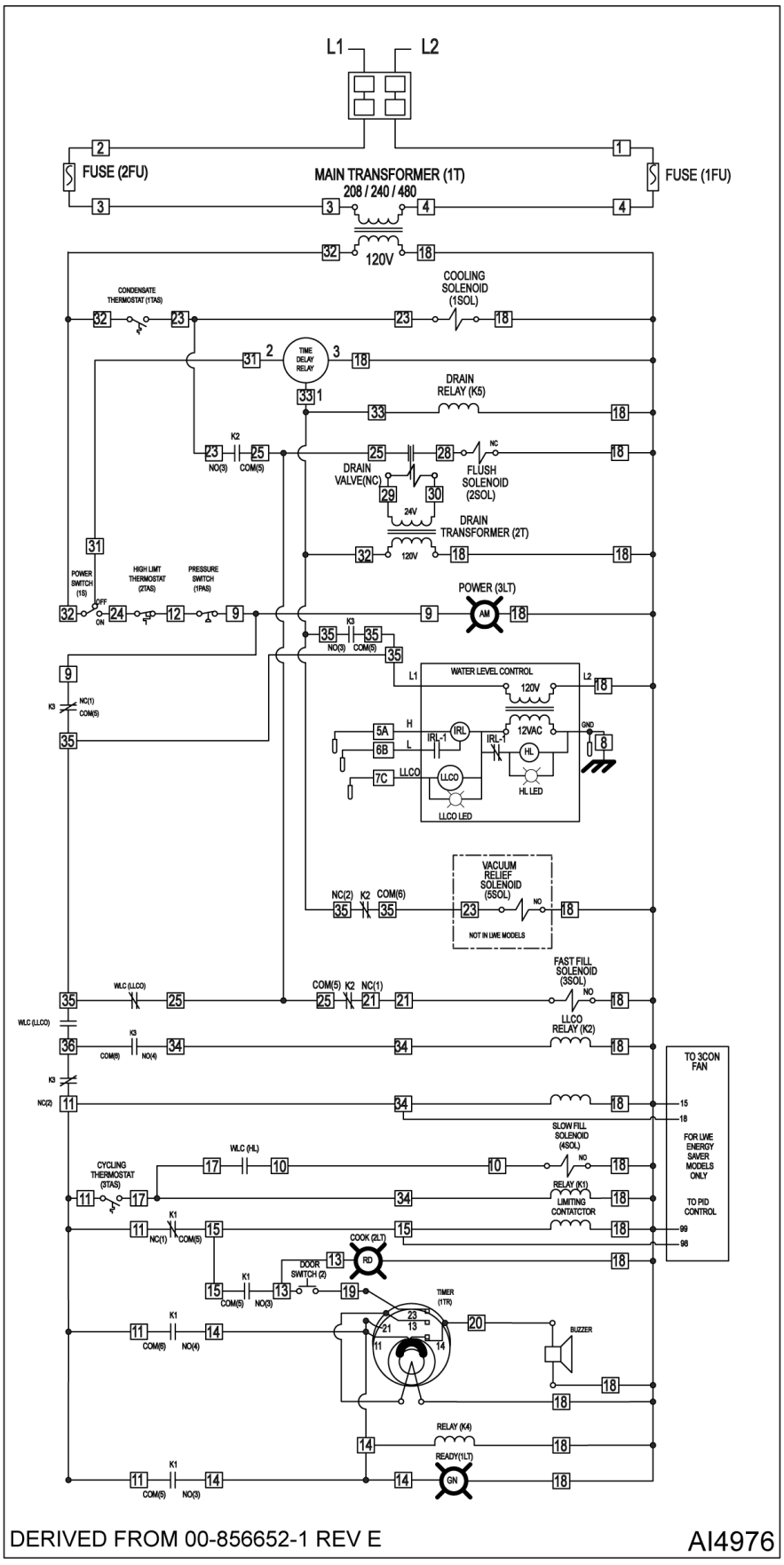


**C24EA3/5, and HC24EA3/5 LWE MODELS**

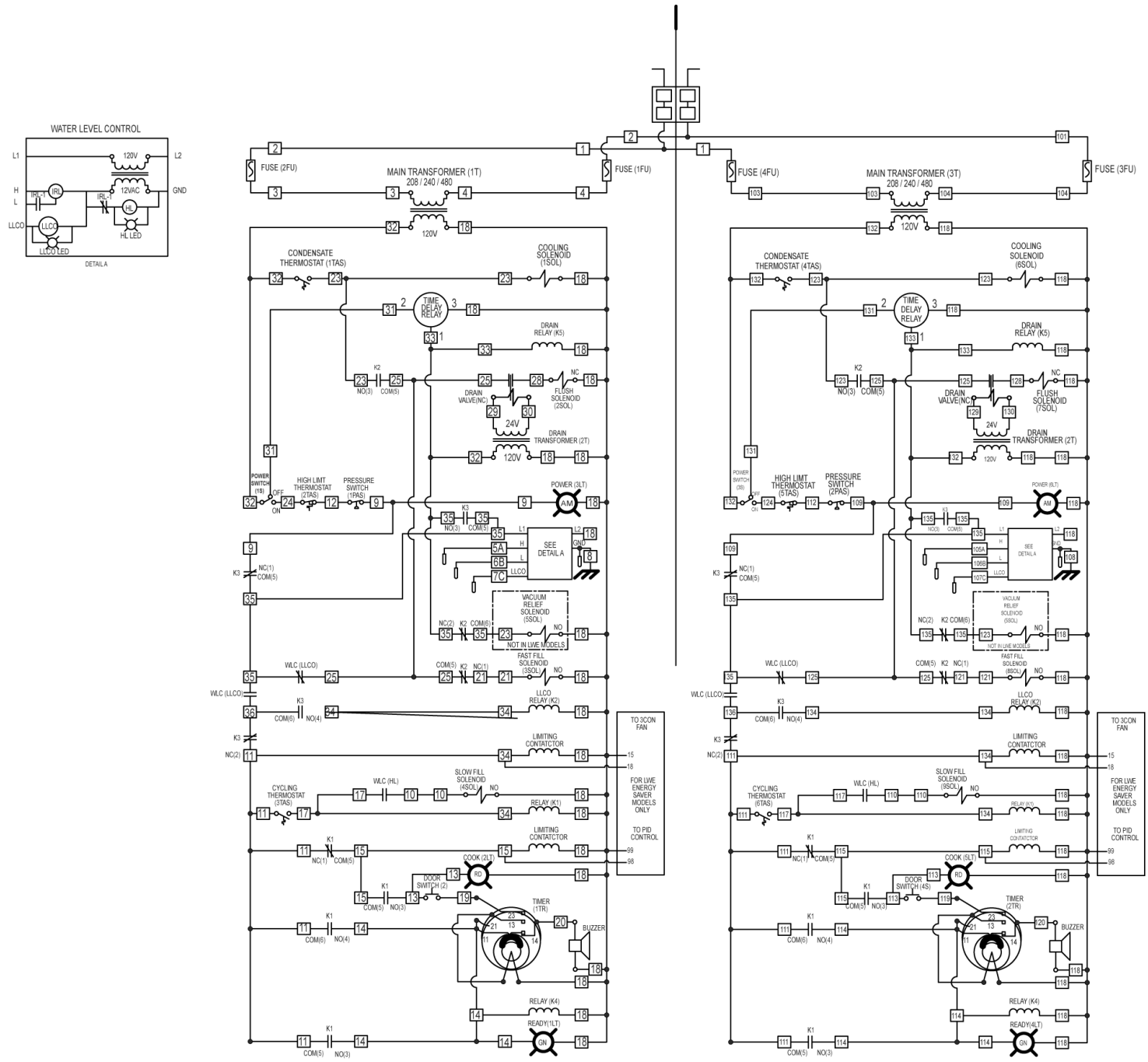


DERIVED FROM 00-858469-1 REV A

AI4977

**C24ET6/10 Pro & LWE MODELS**

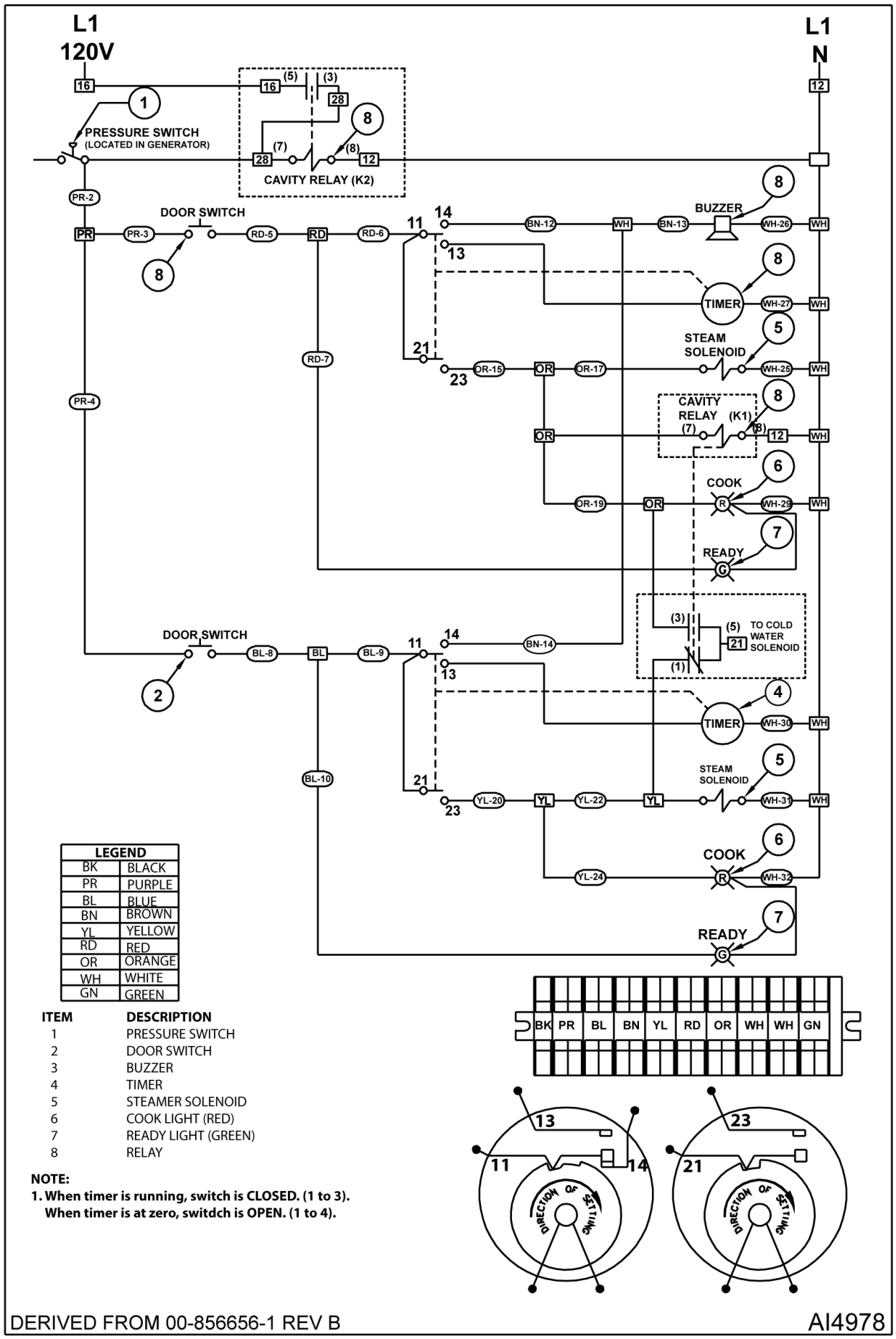


| LEGEND | |
|---|---|
| BK | BLACK |
| PR | PURPLE |
| BL | BLUE |
| BN | BROWN |
| YL | YELLOW |
| RD | RED |
| OR | ORANGE |
| WH | WHITE |
| GN | GREEN |

| ITEM | DESCRIPTION |
|---|---|
| 1 | PRESSURE SWITCH |
| 2 | DOOR SWITCH |
| 3 | BUZZER |
| 4 | TIMER |
| 5 | STEAMER SOLENOID |
| 6 | COOK LIGHT (RED) |
| 7 | READY LIGHT (GREEN) |
| 8 | RELAY |

**NOTE:**
**1. When timer is running, switch is CLOSED. (1 to 3).**
**When timer is at zero, switdch is OPEN. (1 to 4).**

DERIVED FROM 00-856656-1 REV B

AI4978

**C24GA MODELS**

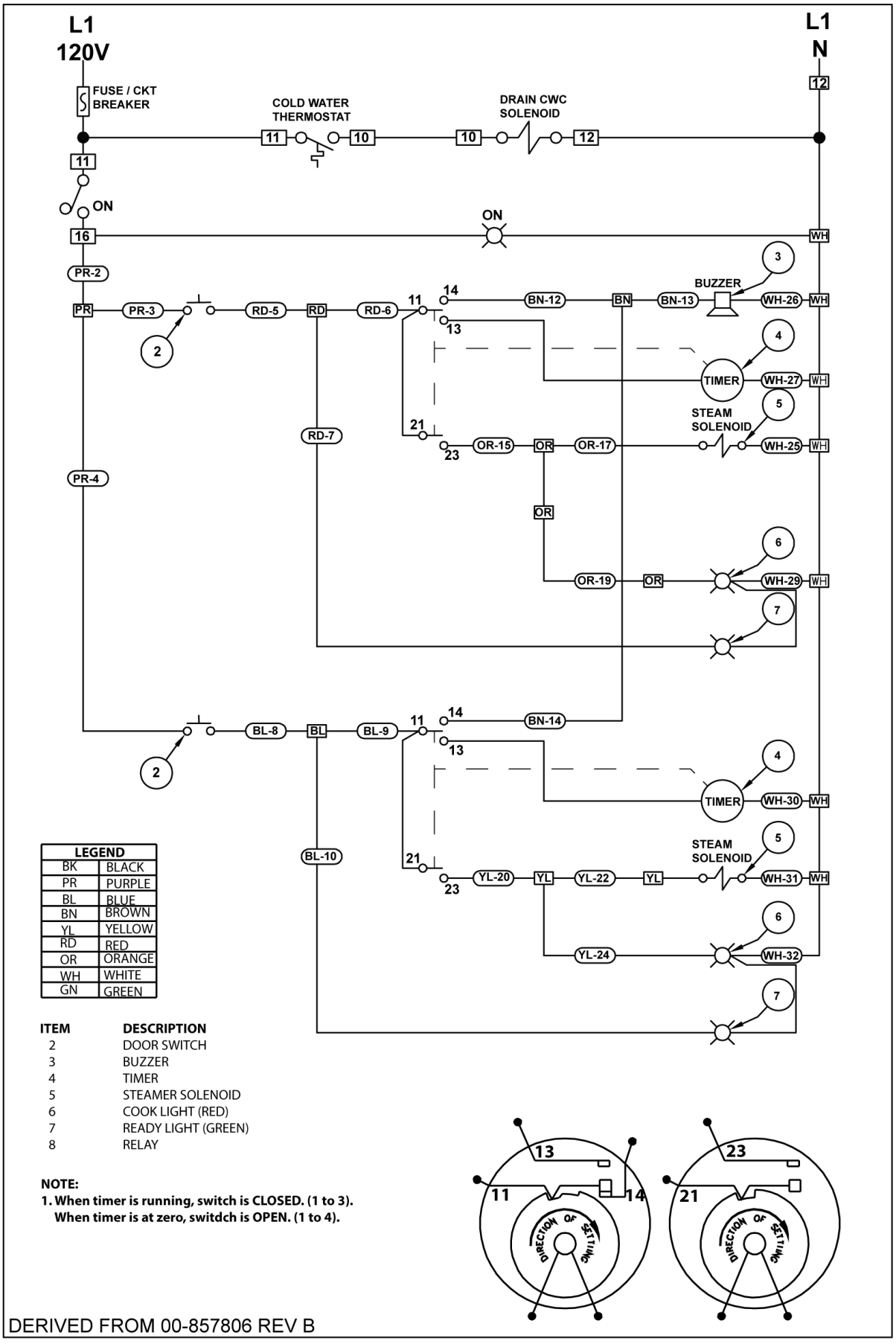


AI4979

**C24DA MODELS**