CATALOG OF REPLACEMENT PARTS

VGL STATIONARY GAS SELF-CONTAINED STEAM KETTLES

MODEL

VGL20
VGL40
VGL60
VGL20E
VGL40E
VGL60E



VGL40

For additional information on Vulcan-Hart Company or to locate an authorized parts and service provider in your area, visit our website at www.vulcanequipment.com

VULCAN-HART
DIVISION OF ITW FOOD EQUIPMENT GROUP, LLC
WWW.VULCANEQUIPMENT.COM

P.O. BOX 696, LOUISVILLE, KY 40201-0696
TEL. (800) 814-2028

FORM 37144 (February 2010)

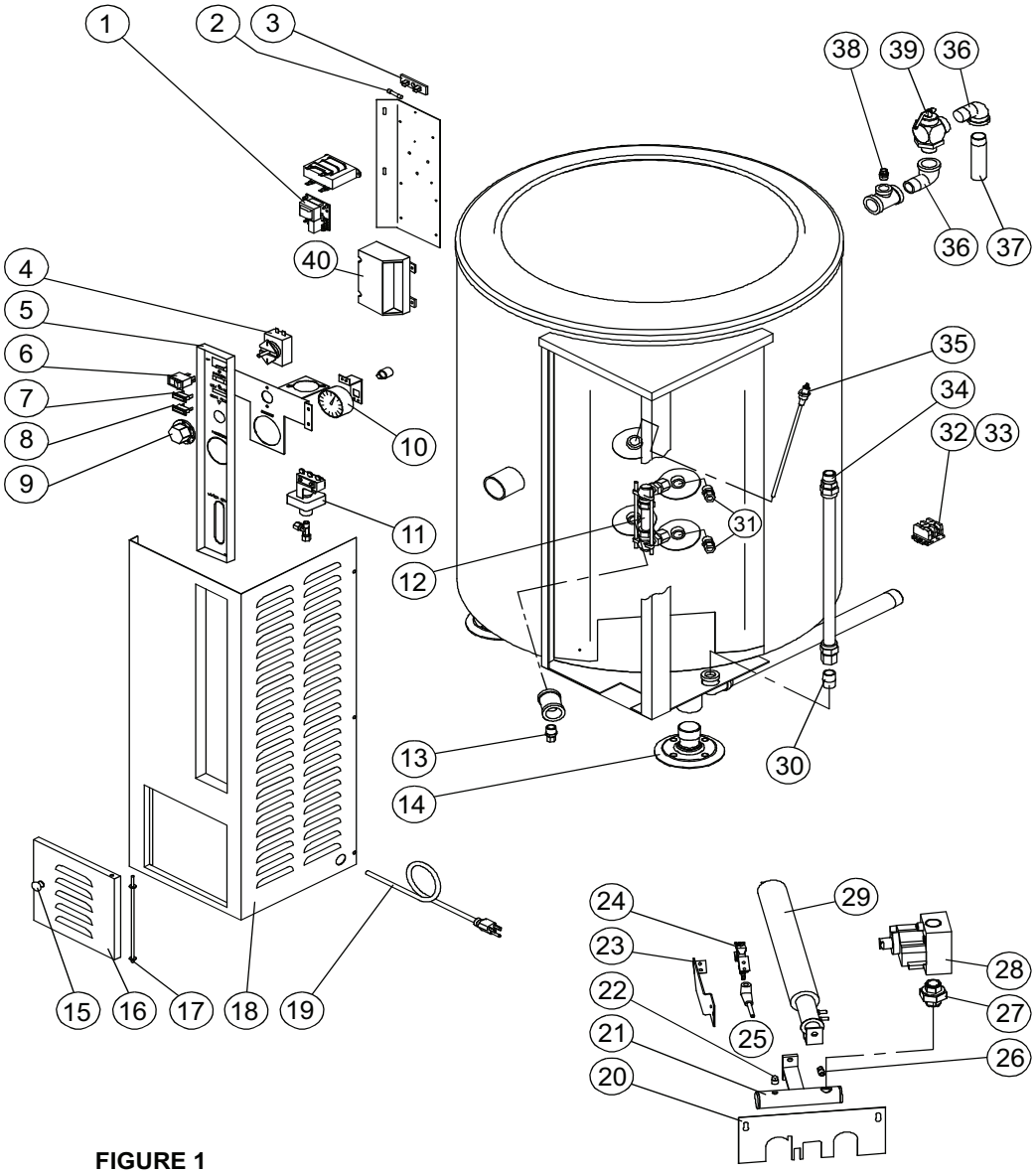

FIGURE 1

REPLACEMENT PARTS LIST

	PART NO.	NAME OF PART	AMT. 20	40	60
1	00-853021	Low Water Cut Off	1	1	1
2	00-881991	Fuse, (3-amp) (250 V)	1	1	1
3	00-881992	Fuse Holder	1	1	1
4	00-844483	Thermostat	1	1	1
5	00-857457	Recess Control Panel	1	1	1
	00-844484	Control Decal	1	1	1
6	00-855542-00005	Power Switch	1	1	1

REPLACEMENT PARTS LIST (Cont.)

	PART NO.	NAME OF PART	AMT. 20	40	60
7	00-853979	Indicator Light (Red) (28 V)	1	1	1
8	00-851640	Indicator Light (Amber) (Low Water)	1	1	1
9	00-836968	Thermostat Dial	1	1	1
10	00-881979	Pressure Gauge	1	1	1
11	00-844322	Pressure Switch	1	1	1
12	00-854273	Sight Glass Assembly	1	1	1
	00-850101-00002	Sight Glass	1	1	1
	00-850102	Washer, Rubber	2	2	2
	00-850103	Washer, Brass	2	2	2
	00-850100	Rod	2	2	2
13	00-844531	Connector $^{1}/_{4}$ C x $^{3}/_{8}$ MPT	1	1	1
14	00-836958	Adjustable Foot	3	3	3
15	00-850024	Door Knob	1	1	1
16	00-855524	Access Door Assy.	1		
	00-855522	Access Door Assy.		1	
	00-851913	Access Door Assy.			1
17	00-855523	Door Hinge	1	1	1
18	00-857318	Corner Front Panel		1	
	00-854364	Corner Front Panel			1
19	00-851389	Cord Set (120 V)	1	1	1
20	00-855648	Front Shield	1		
	00-853173	Front Shield		1	1
21	00-857026	Manifold Assy.	1	1	1
22	00-854334	Pipe Plug, $^{1}/_{8}$ NPT	1	1	1
23	00-857371	Pilot Bracket	1	1	
24	00-845571	Pilot, Burner (Nat. Gas)	1	1	1
	00-845572	Pilot, Burner (LP Gas)	1	1	1
25	00-855084	Ignitor Cable	1	1	1
26	00-850620	Burner Orifice (#29) (Nat. Gas)	2	2	
	00-850582	Burner Orifice (#44) (LP Gas)	2	2	
	00-851899	Burner Orifice (Nat. Gas)			2
	00-851242	Burner Orifice (#39) (LP Gas)			2
27	00-857372	Union, $^{1}/_{2}$ NPT	1	1	1
28	00-857027	Valve (Nat. Gas)	1	1	1
	00-857028	Valve (LP Gas)	1	1	1
29	00-855345	Burner	2		
	00-857536	Burner		2	
	00-851179	Burner			2
30	00-851782	Close Nipple $^{1}/_{2}$	1	1	1
31	00-843941	Connector, $^{3}/_{8}$ C x $^{3}/_{8}$ MPT	2	2	2
32	00-840511	Terminal Block	2	2	2
33	00-843969	End Section	1	1	1
34	00-853976	Gas Flex Hose	1	1	1
35	00-851907	Probe, 9 $^{1}/_{4}$"	1		
	00-851572	Probe, 9 $^{3}/_{4}$"		1	1
36	00-851017	Street Elbow, $^{3}/_{4}$"	1	1	1
37	00-855144	Down Tube	1	1	1
38	00-881961	Air Vent	1	1	1
39	00-844492	Relief Valve	1	1	1
40	00-857271	Ignition Module Kit	1	1	1
	00-854260	Flue Box	1		
	00-857088	Flue Box		1	
	00-857453	Flue Box			1
	00-850552	Faucet Bracket	1	1	1
	00-855551	Bottom Cover		1	

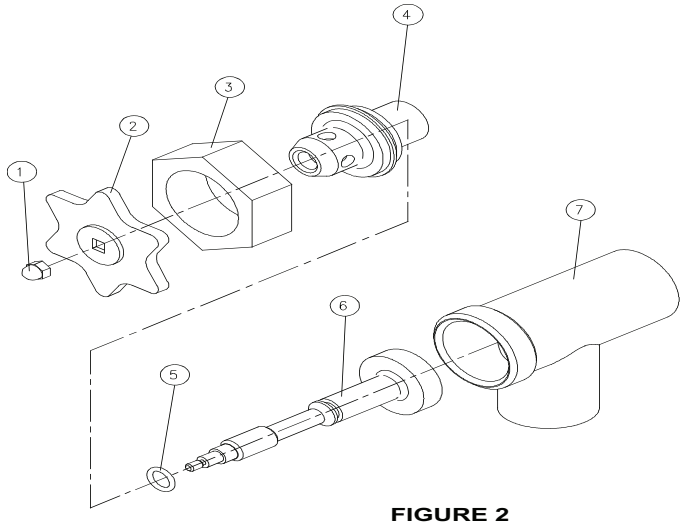

FIGURE 2

DRAW OFF VALVES
REPLACEMENT PARTS LIST

	PART NO.	NAME OF PART	AMT. 1½ " Valve	2" Valve	3" Valve
1	00-854977	Nut	1	1	
	00-836940	Nut			1
2	00-836967	Handle	1	1	
	00-836942	Handle			1
3	00-836943	Hex. Assembly Nut	1		
	00-836944	Hex. Assembly Nut		1	
	00-836945	Hex. Assembly Nut			1
4	00-836946	Bonnet	1		
	00-836947	Bonnet		1	
	00-836948	Bonnet			1
5	00-836966	"O" Ring	1		
	00-836953	"O" Ring		1	
	00-836954	"O" Ring			1
6	00-850218	Disc & Stem Assy.	1		
	00-836950	Disc & Stem Assy.		1	
	00-836951	Disc & Stem Assy.			1
7	00-836955	Valve Body	1		
	00-836956	Valve Body		1	
	00-836957	Valve Body			1
	00-851291	Draw Off Valve Complete	1		
	00-851293	Draw Off Valve Complete		1	
	00-851294	Draw Off Valve Complete			1

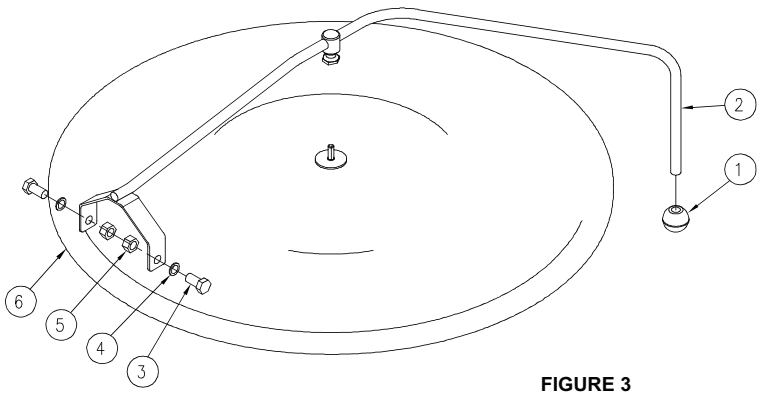

FIGURE 3

HINGED COVER ASSEMBLY

REPLACEMENT PARTS LIST

	PART NO.	NAME OF PART	AMT.
1	00-836964	Knob	1
2	00-850499	Handle Assy. (20 Gallon)	1
	00-854466	Handle Assy. (40 Gallon)	1
3	00-851335	Bolt	2
4	00-851906	Fiber Washer	4
5	NS-015-16	Nut	2
6	00-850216	Cover (20 Gallon)	1
	00-850217	Cover (40 Gallon)	1

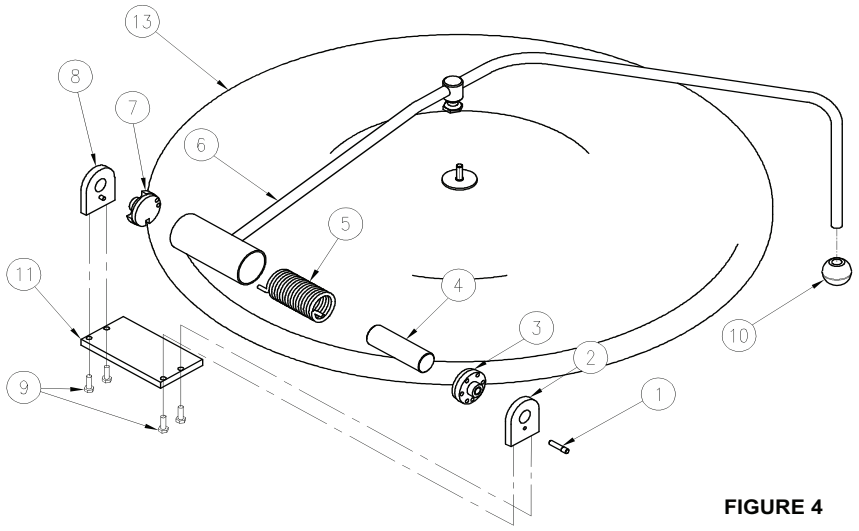

FIGURE 4

SPRING ASSIST HINGE ASSEMBLY

REPLACEMENT PARTS LIST

	PART NO.	NAME OF PART	AMT.
1	00-836986	Lock Pin	1
2	00-844367-00040	End Lock Plate	1
3	00-854974	Stationary Disc	1
4	00-854975	Cores	1
5	00-836990	Spring	1
6	00-850518-00002	Handle Assy. (20 Gallon)	1
	00-850518-00003	Handle Assy. (40 Gallon)	1
	00-850061	Handle Assy. (60 Gallon)	1
7	00-854976	Rotary Disc	1
8	00-836993	End Stop Plate	1
9	SC-041-10	Cap Screws	4
10	00-836964	Knob	1
	00-844461	Hinge Assy.	1
	00-850216	Cover (20 Gallon)	1
	00-850217	Cover (40 Gallon)	1
	00-844424	Cover (60 Gallon)	1

RECOMMENDED SPARE PARTS LIST

PART NO.	NAME OF PART	AMT.
00-851907	Probe (20 Gallon)	1
00-851572	Probe (40 / 60 Gallon)	1
00-853021	Low Water Cuf Off	1
00-844483	Thermostat	1
00-836968	Thermostat Knob	1
00-844321	Power Switch	2
00-845571	Spark Ignitor W/Sensor (Nat. Gas)	1
00-845572	Spark Ignitor W/Sensor (LP Gas)	1
00-855084	Ignitor Cable	1
00-857271	Ignitor Module	1
00-857027	Valve, Electronic Ignition (Nat. Gas)	1
00-857028	Valve, Electronic Ignition (LP Gas)	1
00-881991	Fuse, 3-amp 250V	2
00-881992	Fuse Holder	2
00-844322	Pressure Switch	1
00-854349	Pilot, Standard Ignition (Nat. Gas)	1
00-853917	Pilot, Standard Ignition (LP Gas)	1
00-853611	Valve, Standard Ignition (Nat. Gas)	1
00-850027	Valve, Standard Ignition (LP Gas)	1
00-844022	Thermocouple, Standard Ignition	1
00-850620	Burner Orifice (#29) (20 / 40 Gallon) (Nat. Gas)	2
00-850582	Burner Orifice (#44) (20 / 40 Gallon) (LP Gas)	2
00-851899	Burner Orifice (#21) (60 Gallon) (Nat. Gas)	2
00-851242	Burner Orifice (#39) (60 Gallon) (LP Gas)	2
00-844492	Pressure Relief Valve (50 lb.)	1
00-881979	Pressure Gauge	1
00-854273	Sight Glass Assy.	1
00-881961	Air Vent	1
00-853979	Light, Cooking (Red)	1
00-851640	Light, Low Water (Amber)	1