CATALOG OF REPLACEMENT PARTS ACB AND VACB GAS CHARBROILERS

(REVISION B – MANUFACTURED BEGINNING FEBRUARY 2013)

ITW Food Equipment Group

WOLF

VULCAN

MODELS

VACB25
VACB36
VACB47
VACB60
VACB72



VACB36

ACB25
ACB36
ACB47
ACB60
ACB72



ACB36

For additional information on Vulcan or to locate an authorized parts and service provider in your area, visit our website at www.vulcanequipment.com

©ITW Food Equipment Group, LLC
3600 North Point Blvd.
Baltimore, MA 21222

RETAIN THIS MANUAL FOR FUTURE USE

FORM F-38349 Rev A (09-24)

 © VULCAN-HART COMPANY 2024

Table of Contents

5 CHARBROILER

19 Regulator - Pressure 3/4 In. (LP)
20 Regulator - Pressure 3/4 In. (NAT)
21 Plate - Mid Support
22 Brush - Wire

PARTS NOT ILLUSTRATED

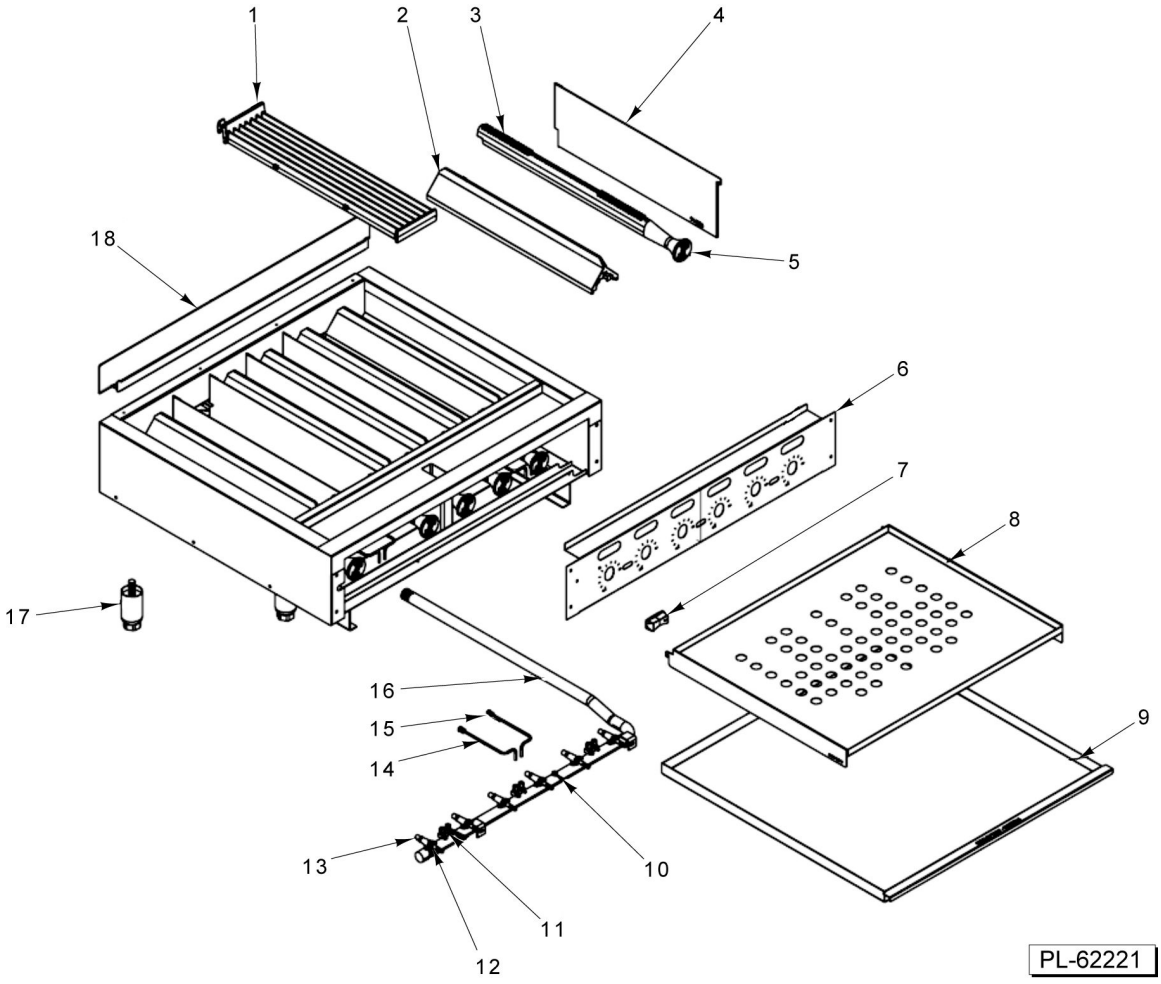

CHARBROILER

CHARBROILER

ILLUS. PL-62221	PART NO.	NAME OF PART	AMT.
1	00-720971-00024	Grate - 7-Rib Cast Diamond	AR
2	00-410602-00001	Cast Radiant	AR
3	00-944300-0000A	Burner Assy. (Includes Shutter)	AR
4	00-944356	Plate - Supercharger	AR
5	00-944300-00001	Shutter - Burner	AR
6	00-944355-00025	Panel - Front (25 In.)	1
	00-944355-00036	Panel - Front (36 In.)	1
	00-944355-00048	Panel - Front (48 In.)	1
	00-944355-00060	Panel - Front (60 In.)	1
	00-944355-00072	Panel - Front (72 In.)	1
7	00-944265	Knob (Chrome)	AR
	00-719259-00012	Knob - Red	AR
8	00-944357-00024	Tray - Deflector (25 In.)	1
	00-944357-00036	Tray - Deflector (36 In.)	1
	00-944357-0048L	Tray - Deflector (47/60 In.) (LH)	1
	00-944357-0048R	Tray - Deflector (47 In.) (RH)	1
	00-944357-0072L	Tray - Deflector (72 In.) (LH)	1
	00-944357-0072R	Tray - Deflector (72 In.) (RH)	1
9	00-944358-00024	Tray - Crumb (25/47 In.) (60 In. LH)	AR
	00-944358-00036	Tray - Crumb (36/60 In. RH) (72 In.)	AR
10	00-719370	Plug	AR
11	00-719190	Valve (Double)	AR
	00-719189	Valve - Manual Griddle (Single) (60/72 In.)	1
12	00-497240-00001	Valve - Manifold	AR
13	00-719951-00045	Hood - Orifice (Drill 45)	2
	00-719951-00050	Hood - Orifice (Drill 50)	AR
	00-719951-00056	Hood - Orifice (Drill 56)	AR
14	00-944360-L000A	Pilot Tube Assy. (LH)	AR
15	00-944360-R000A	Pilot Tube Assy. (RH)	AR
16	00-944353-0024A	Pipe - Manifold (25 In.)	1
	00-944353-0036A	Pipe - Manifold (36 In.)	1
	00-944353-0048A	Pipe - Manifold (47 In.)	1
	00-944353-0060A	Pipe - Manifold (60 In.)	1
	00-944353-0072A	Pipe - Manifold (72 In.)	1
17	00-944412	Leg	4
18	00-944352-40025	Backsplash (25 In.)	1
	00-944352-40036	Backsplash (36 In.)	1
	00-944352-40048	Backsplash (47 In.)	1
	00-944352-40060	Backsplash (60 In.)	1
	00-944352-40072	Backsplash (72 In.)	1
19	00-408279-00021	Regulator - Pressure 3/4 In. (LP)	1
20	00-408279-00025	Regulator - Pressure 3/4 In. (NAT)	1
21	00-944352-00010	Plate - Mid Support	2
22	00-710412	Brush - Wire	1