WIRE DIAGRAM, CT4B FAMILY

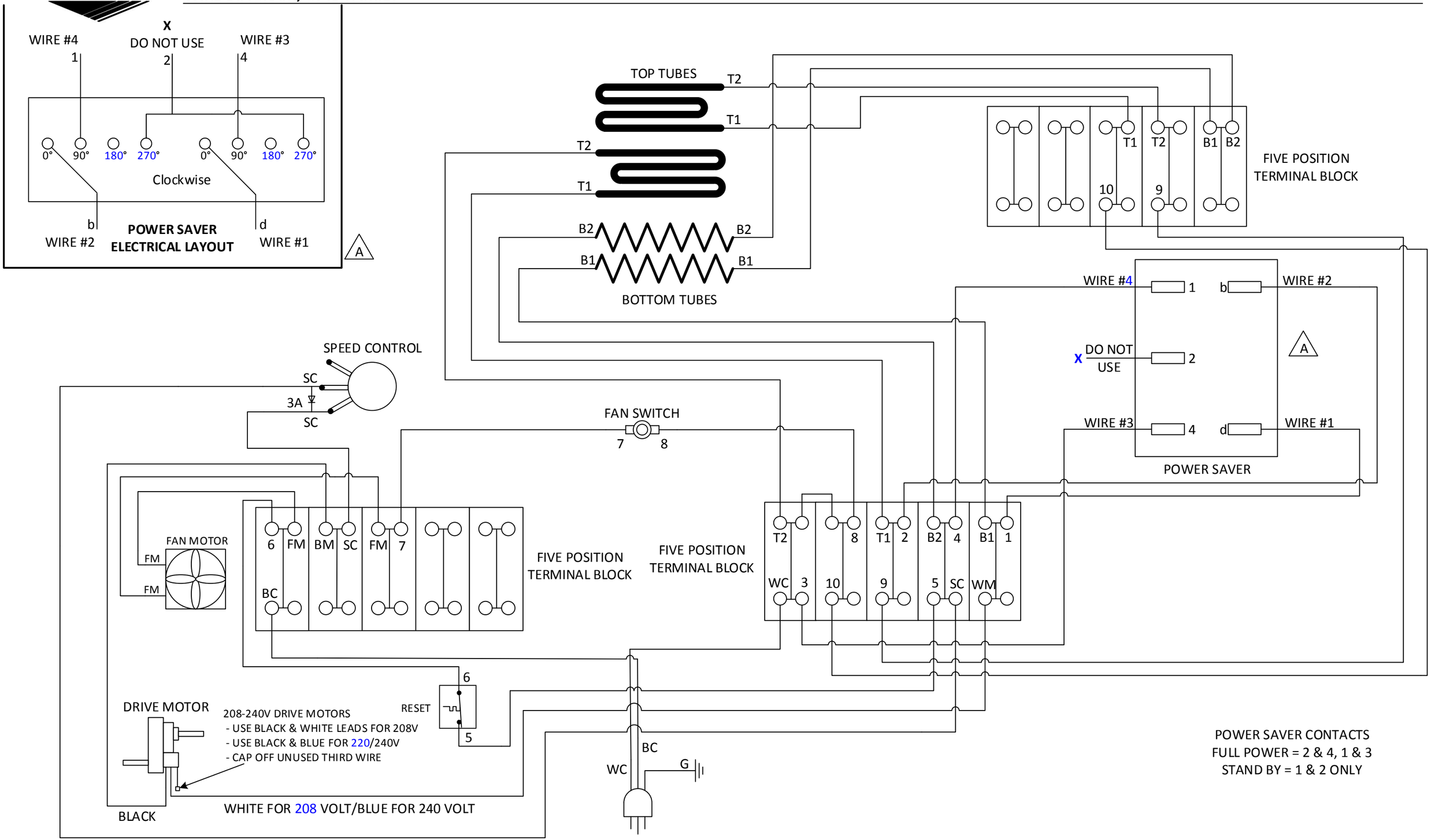

©2018 Document No. WD025 Rev B