# WIRE DIAGRAM, CT4B FAMILY

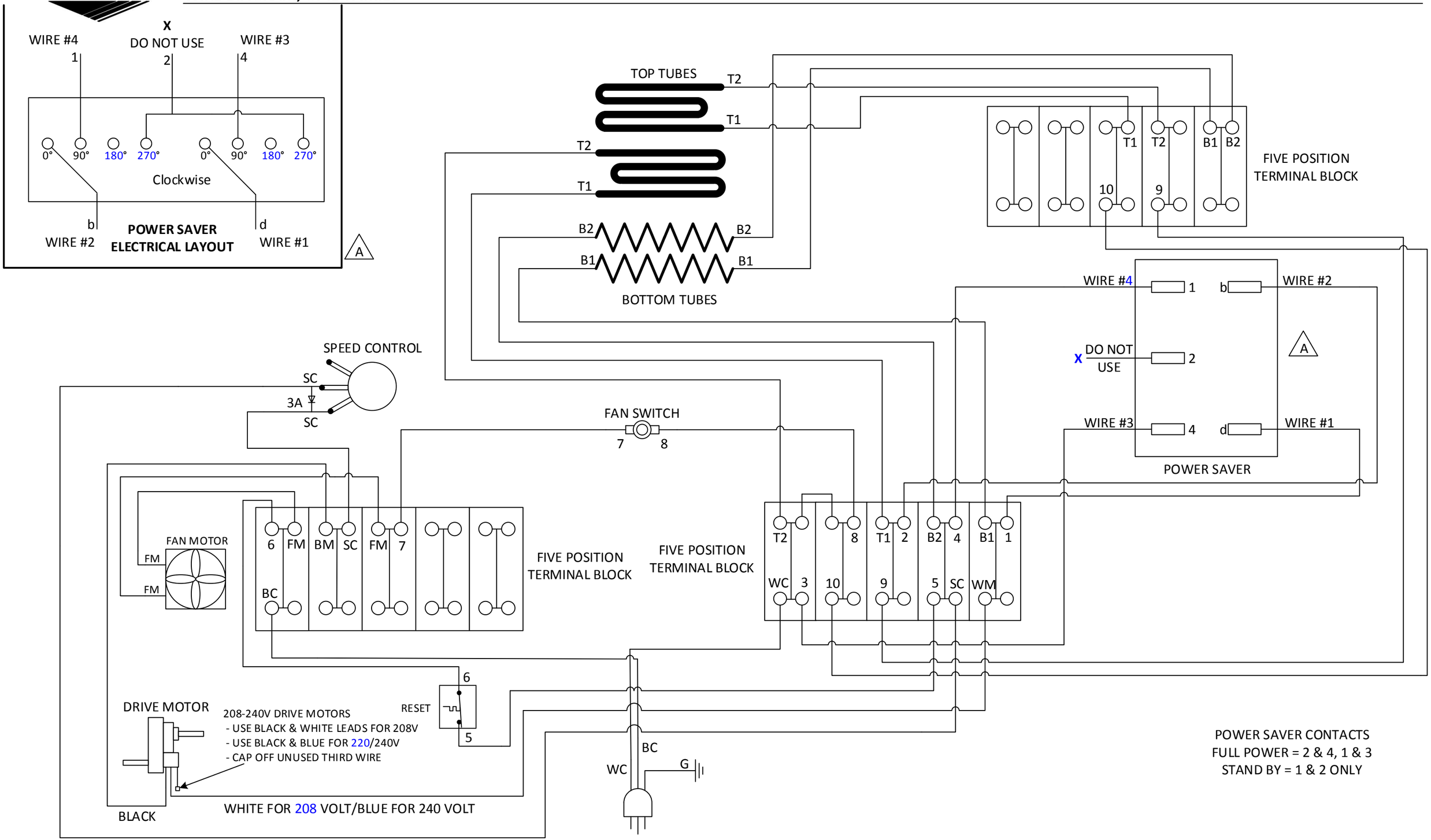




©2018 Document No. WD025 Rev B