WIRE DIAGRAM, SO2 14.5"

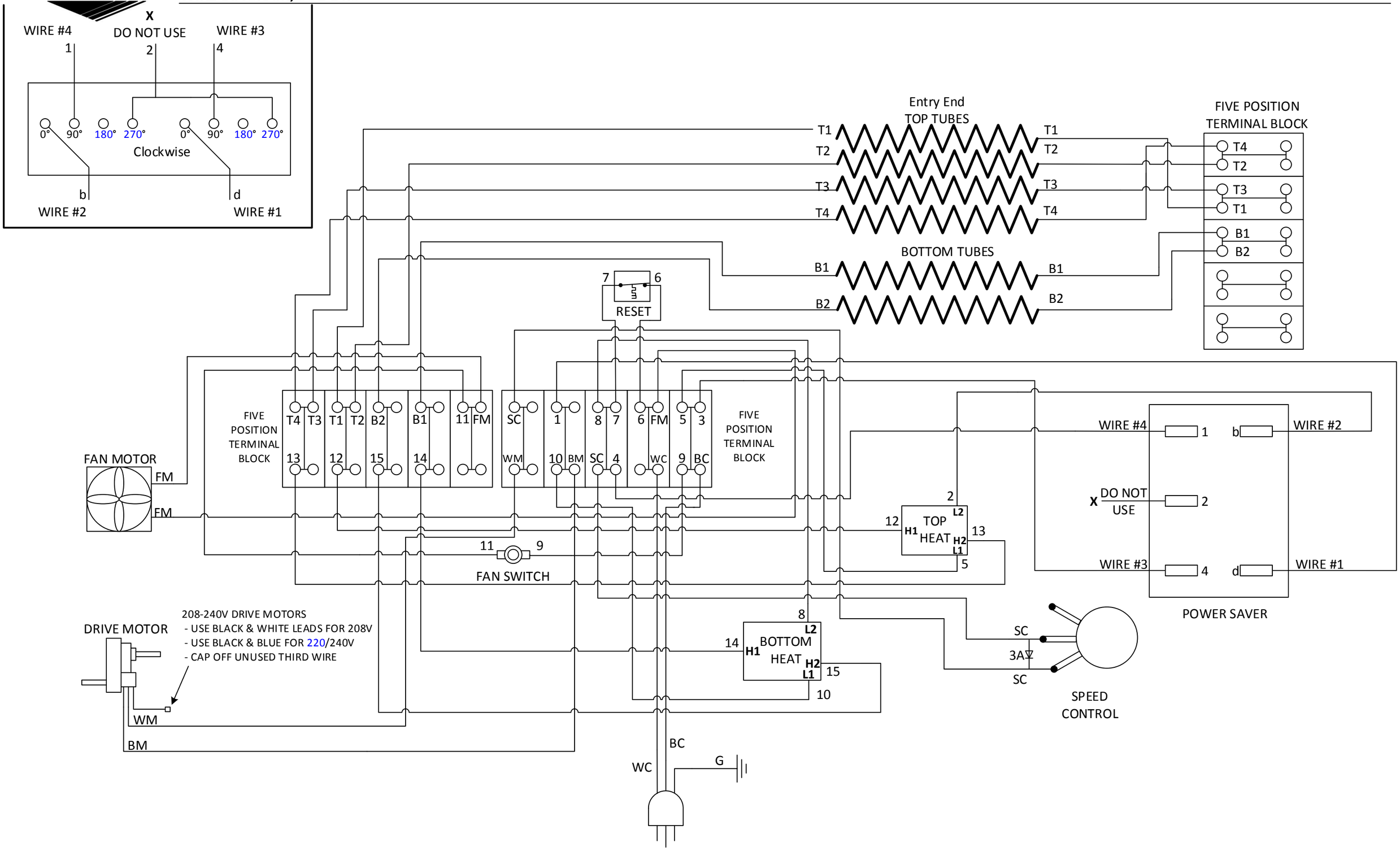

©2018 Document No. WD015 Rev A