Amana®

Service

This manual is to be used by qualified appliance technicians only. Maytag does not assume any responsibility for property damage or personal injury for improper service procedures done by an unqualified person.

This Base Manual covers general information

Refer to individual Technical Sheet for information on specific models

This manual includes, but is not limited to the following:

Amana

NDE2330AYW
NDE5800AYW
NDE7800AYW
NDG2330AWW
NDG5800AWW
NDG7800AWW
SDE2606AYW
SDE305DAYW
SDE415DAYW
SDE4606AYW
SDE515DAYW
SDG2606AWW
SDG305DAWW
SDG3606AWW
SDG4606AWW
SDG515DAWW

Home Laundry Dryers

MAYTAG®

16023020
September 2004

Important Information

Important Notices for Servicers and Consumers

Maytag will not be responsible for personal injury or property damage from improper service procedures. Pride and workmanship go into every product to provide our customers with quality products. It is possible, however, that during its lifetime a product may require service. Products should be serviced only by a qualified service technician who is familiar with the safety procedures required in the repair and who is equipped with the proper tools, parts, testing instruments and the appropriate service information. **IT IS THE TECHNICIANS RESPONSIBILITY TO REVIEW ALL APPROPRIATE SERVICE INFORMATION BEFORE BEGINNING REPAIRS.**

WARNING

To avoid risk of severe personal injury or death, disconnect power before working/servicing on appliance to avoid electrical shock.

To locate an authorized servicer, please consult your telephone book or the dealer from whom you purchased this product. For further assistance, please contact:

Customer Service Support Center

CAIR Center

Web Site	Telephone Number
WWW.AMANA.COM	1-800-843-0304
WWW.JENNAIR.COM	1-800-536-6247
WWW.MAYTAG.COM	1-800-688-9900
CAIR Center in Canada	1-800-688-2002
Amana Canada Product	1-866-587-2002

Recognize Safety Symbols, Words, and Labels

DANGER

DANGER—Immediate hazards which **WILL** result in severe personal injury or death.

WARNING

WARNING—Hazards or unsafe practices which **COULD** result in severe personal injury or death.

CAUTION

CAUTION—Hazards or unsafe practices which **COULD** result in minor personal injury, product or property damage.

©2004 Maytag Services

Table of Contents

Important Information 2
Important Safety Information 4
Introduction
- Model Identification 5
- Electrical Service Information 5
- About Ground Wires 5

General Information
- Dryer Operation 6

Component Testing Information 7
- Burner System Operation 10
- Ignition System Features 10
- Electric Circuit to Ignition System 10
- Temperature Settings 10

Internal Motor Diagram and Schematic 11
Troubleshooting Procedures
1. Motor does not operate. 13
2. Dryer stops in middle of cycle, quits after a couple loads, has a burning smell or cycles on motor thermal protector. 13
3. Motor operates but cylinder does not turn. 14
4. Motor does not stop. 14
5. Ignitor does not glow. 14
6. Heating assembly does not heat or burner does not ignite. 15
7. Burner ignites and goes out repeatedly. 15
8. Ignitor glows but burner does not ignite. 16
9. Heater assembly or burner shuts off prematurely. 16
10. Heater assembly or burner repeatedly cycles off on limit thermostat. 16
11. Heater assembly or burner does not shut off. 17
12. Clothes do not dry.. 17
13. Signal does not operate correctly. 17
14. Timer does not advance in AUTOMATIC cycle. . 18
15. Clothing is too hot when removing from dryer. ... 18

Disassembly Procedures
- Control Hood Assembly 19
- Control Hood End Panels 19
- Electronic Control 19
- Timer 19
- Signal Switch 20
- Selector Switch 20
- Rocker Switch 21
- Graphic Panel 21
- Loading Door and Door Hinges 21
- Door Pull 21
- Door Strike and Door Seal 21
- Door Switch 21
- Door Catch 21
- Door Reversal 22
- Service Access Panel 23
- Front Panel 23
- Front Panel Seal 23
- Hold-Down Clips and Locators 23
- Cabinet Top 23
- Front Bulkhead Assembly 24
- Front Air Duct 24
- Moisture Sensor 24
- Cylinder Light 24
- Cylinder Light Receptacle 25
- Cylinder Belt 25
- Cylinder Assembly 25
- Cylinder Rollers 26
- Rear Seal 26
- Rear Bulkhead and Heater Box 26
- Heating System 27
- Limit Thermostat (Gas Models) 28
- Heating Element (Electric Models) 28
- Limit Thermostat and Thermal Fuse (Electric Models) 29
- Cabinet 29
- Base 30
- Thermistor or Thermostat and Heater 30
- Motor and Exhaust Assembly 31
- Terminal Block 32
- Terminal Block Terminals 32
- Power Cord 32

Appendix A
- Installation Instructions A-2

Important Safety Information

⚠ WARNING

To avoid risk of fire, electric shock, serious injury, or death when using your dryer, follow these basic precautions:

1. Read all instructions before using dryer.
2. Install dryer according to Installation Instructions. Refer to the Grounding Instructions in the Installation Instructions for proper grounding of the dryer.
3. Do not dry articles that have been cleaned in, washed in, soaked in, or spotted with gasoline, dry-cleaning solvents, or other flammable or explosive substances. Vapors could ignite or explode.
4. Do not use dryer to dry clothes which have traces of any flammable substance, such as vegetable oil, cooking oil, machine oil, flammable chemicals, thinner, etc., or anything containing wax or chemicals, such as mops and cleaning cloths. Flammable substances may cause fabric to catch fire by itself.
5. Do not store or use gasoline or other flammable vapors and liquids near this or any other appliance.
6. Do not allow children to play on or in dryer. Close supervision of children is necessary when dryer is used near children, a safety rule for all appliances.
7. Before dryer is removed from service or discarded, remove door to drying compartment.
8. Do not reach into dryer if cylinder is revolving.
9. Do not install or store dryer where it will be exposed to water and/or weather.
10. Do not tamper with dryer controls.
11. Do not repair or replace any part of dryer or attempt any service, unless specifically recommended in user-maintenance instructions or in published user-repair instructions that you understand and have skills to carry out, if you are a consumer.
12. To reduce risk of electric shock or fire, do not use extension cords or adapters to connect dryer to electrical power source.
13. Use the dryer only for its intended purpose, drying clothes.
14. Always disconnect dryer from electrical supply before attempting any service. Disconnect power cord by grasping the plug, not the cord.
15. Do not use heat to dry articles containing foam rubber or similarly textured rubberlike materials.
16. Always clean the lint filter after every load. A layer of lint in the filter reduces drying efficiency and prolongs drying time.
17. Use only fabric softeners or products to eliminate static that are appropriate for automatic dryers.
18. Keep your dryer in good condition. Bumping or dropping dryer can damage safety features. If damage occurs, have dryer checked by qualified service technician.
19. Replace worn power cords and/ or loose plugs.
20. Do not tumble fiberglass curtains and draperies unless the label says it can be done. If they are dried, wipe out the cylinder with a damp cloth to remove particles of fiberglass.
21. Always read and follow manufacturer's instructions on packages of laundry aids. Heed all warnings or precautions. To reduce risk of poisoning or chemical burns, keep products away from children at all times, preferably, in a locked cabinet.
22. Never operate dryer with guards and/or panels removed.
23. Do not operate dryer with missing or broken parts.
24. Do not bypass safety devices.
25. Keep area around the exhaust opening and adjacent surrounding areas free from accumulation of lint, dust, and dirt.
26. Interior of dryer and exhaust duct should be cleaned periodically by qualified service personnel.
27. Dryer will not operate with loading door open. DO NOT bypass door safety switch by permitting dryer to operate with door open. Dryer will stop tumbling when door is opened. Do not use dryer if it does not stop tumbling when door is opened or starts tumbling without pressing or turning the START mechanism. Remove the dryer from use and call the service person.
28. Remove laundry immediately after the dryer stops.
29. ALWAYS follow the fabric care instructions supplied by the garment manufacturer.

Save These Instructions

©2004 Maytag Services

Introduction

Model Identification

Please read the Installation Instructions thoroughly. This manual provides proper maintenance information. Any questions, call the Consumer Affairs Department.

Complete registration card and promptly return. If registration card is missing, call the Consumer Affairs Department. Appliance can also be registered through our website www.maytag.com.

Serial plate is located in the upper right hand corner of the door opening.

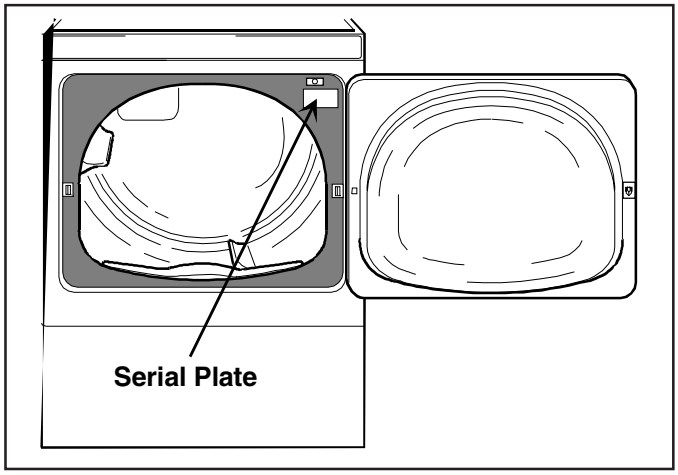

When contacting Maytag Appliances, provide product information. Product information is on the serial plate. Record the following information.

Model Number: _____

Manufacturing Number: _____

S/N or Serial Number: _____

Date of Purchase: _____

Dealer's name and address: _____

_____

NOTE: Translation may sometimes cause variations in meaning. In all cases where meaning varies, the most accurate meaning will be the English version of this document.

Electrical Service Information

Electrical Dryers

- 240 VAC, 60 Hz, 30 Amps, 3–wire or 4–wire installations

Gas Dryers

- 120 VAC, 60 Hz, 15 Amps, 3–wire installations

About Ground Wires

In the event of an electrical short circuit, a ground wire reduces the risk of electric shock by providing an escape wire for the electric current.

Standard accepted color coding for ground wires is **green** or **green with a yellow stripe.**

Grounding wires and wires colored like grounding wires are **NOT** to be used as current carrying conductors.

⚠ WARNING

To reduce the risk of fire, electric shock, serious injury or death, all wiring and grounding must conform with the latest edition of the National Electric Code, ANSI/ NFPA 70, or the Canadian Electrical Code, CSA C22.1, and such local regulations as might apply. It is the customer's responsibility to have the wiring and fuses checked by a qualified electrician to make sure your home has adequate electrical power to operate the dryer.

⚠ WARNING

To avoid risk of personal injury or death due to electrical shock:

- **Observe all local codes and ordinances.**
- Disconnect electrical power to unit before servicing.
- Ground appliance properly.
- Check with a qualified electrician if you are not sure this appliance is properly grounded.
- DO NOT ground to gas line.
- DO NOT ground to cold water pipe if pipe is interrupted by plastic, non-metallic gaskets, or other insulating (non-conducting) materials.
- DO NOT modify plug on power cord. If plug does not fit electrical outlet, have proper outlet installed by qualified electrician.
- DO NOT have a fuse in the neutral or ground circuit. A fuse in the neutral or ground circuit could result in an electrical shock.
- DO NOT use an extension cord with this appliance.
- DO NOT use an adapter plug with this appliance.
- DO NOT pinch power cord.

General Information

Dryer Operation

Dryers use heated air to dry loads of laundry. Once the unit is operational, the exhaust fan pulls air through louvers located at the rear of the dryer. This air is drawn over the heat source (burner flame for gas and heating element for electric). The heated air then moves through the heater duct and into the cylinder, where it is circulated through the wet load of laundry. The air is drawn through the lint filter, into the exhaust fan and forced through the exhaust vent to an outdoor duct.

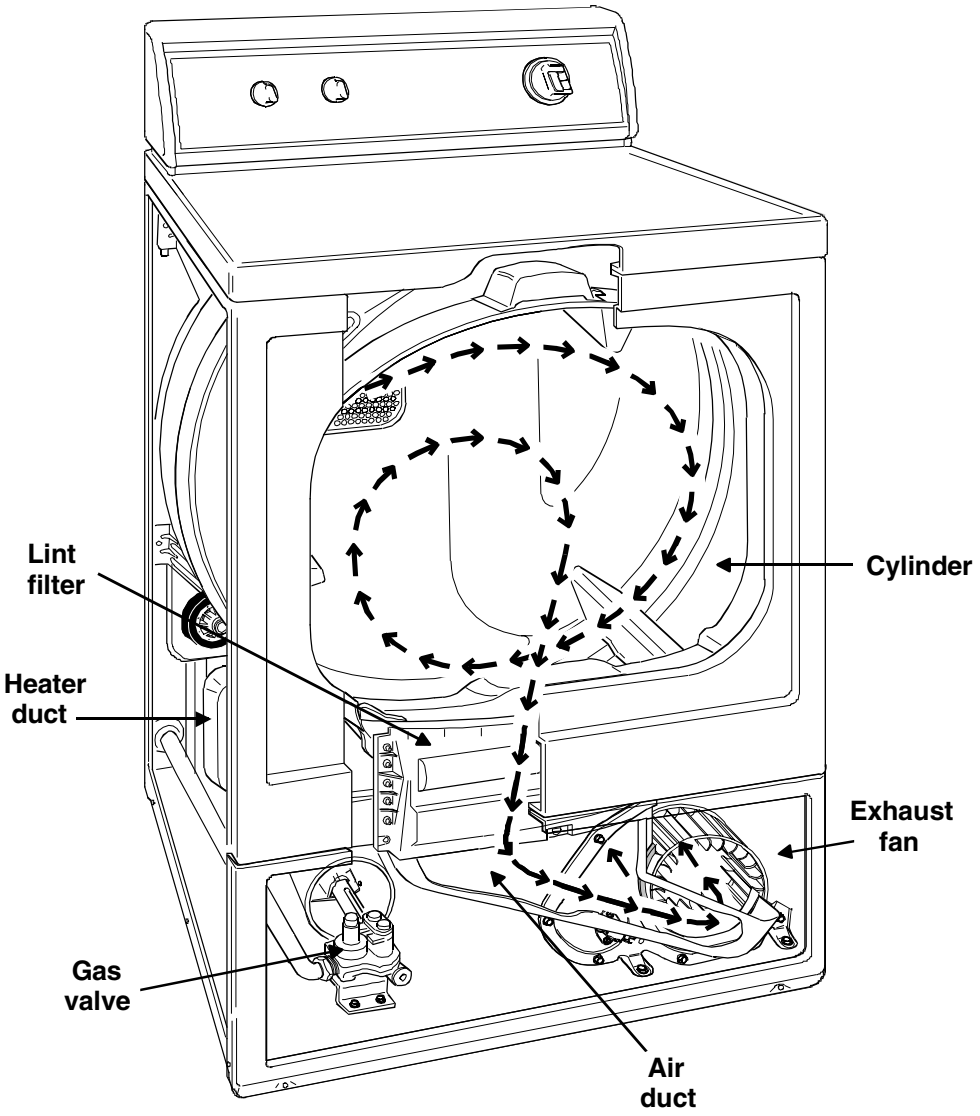

NOTE: Typical gas dryer shown in illustration.

 ©2004 Maytag Services

Component Testing Information

WARNING

To avoid risk of electrical shock, personal injury, or death, disconnect power to dryer and shut-off gas supply before servicing, unless testing requires it.

Illustration	Component	Test Procedure	Results
	Rocker switch (Extended Tumble)	Measure resistance of switch positions: ON (Closed position)..... OFF (Open position)	 Continuity < 1 Ω Infinite > 1 MΩ
	Thermal fuse (Electric Models)	Measure resistance of thermal fuse from terminal to terminal. Open at 360° ± 12° F (182° ± 7° C) .... Auto reset –31° F (–35° C) max.	If thermal fuse is open, both thermal fuse and limit thermostat **must be replaced**. Continuity < 1 Ω
Black	Thermostat limit (Gas Models) S.P.S.T. – 2 terminals	Measure resistance of the following terminals: Terminals 1 – 2.....	Open at 225° ± 7° F Close at 215° ±10° F Continuity > 1 Ω
Orange	Thermostat limit (Electric Models) S.P.D.T. – 3 terminals	Measure resistance of the following terminals: Terminals 1 – 3..... Heat thermostat with a small flame until a distinct click is heard. Terminals 1 – 2.....	Open at 225° ± 7° F Close at 185° ± 9° F Continuity < 1 Ω Continuity < 1 Ω
Red	Thermostat limit (Electric Models) S.P.S.T. – 2 terminals	Measure resistance of the following terminals: Terminals 1 – 2.....	Open at 225° ± 7° F Close at 185° ± 9° F Continuity < 1 Ω
Pink / White	Thermostat cycling (Gas and Electric Models) S.P.D.T. – 3 terminals	Measure resistance of the following terminals: Terminals 1 – 3..... Heat thermostat with a small flame until a distinct click is heard. Terminals 1 – 2.....	Open at 153° ± 5° F Close at 138° ± 5° F Continuity < 1 Ω Continuity < 1 Ω
	Thermostat heater	Disconect wire terminals and measure resistance of terminals. Terminal to terminal.....	 2400 ± 240 Ω
	Signal switch 4 position	Measure resistance of the switch in the following positions: Off.....A – Open..... Low .....A – 1..... Medium.....A – 2..... High .....A – 1 – 2.....	 Approximately 1 KΩ — Infinite > 1 MΩ Approximately 1 KΩ — Continuity < 1 MΩ Approximately 1 KΩ — Continuity < 1 MΩ Approximately 1 KΩ — Continuity < 1 MΩ
	Adjustable buzzer	Power component at 120 VAC	Listen for **Audible Tone.**
	Selector switch	Measure resistance of the switch: CCW stop position..... CW stop position	 10 Ω max. 10 k Ω min.
	Lamp holder	Measure resistance of the following: Terminal to terminal.....	 Infinite > 1 MΩ

Component Testing Information

WARNING

To avoid risk of electrical shock, personal injury, or death, disconnect power to dryer and shut-off gas supply before servicing, unless testing requires it.

Illustration	Component	Test Procedure	Results
	Door switch 1 – COM 2 – N.C. 3 – N.O.	Measure resistance of the switch: Door closed Terminals 1 – 3..... Door opened Terminals 1 – 2.....	 Continuity < 1 Ω Continuity < 1 Ω
	Fabric selector 3 position switch	Place switch in the positions indicated in the chart. Measure resistance of the terminals indicated. X indicates continuity	

	L1-1	L1-2	L1-3
Perm Press/ Regular	—	X	—
Delicate	X	X	—
Fluff	—	—	X

	Fabric selector 4 position switch	Place switch in the positions indicated in the chart. Measure resistance of the terminals indicated. X indicates continuity	

	L1-1	L1-2	L1-3	L1-4
Fluff	—	—	X	—
Delicate	X	X	—	—
Perm Press	—	X	—	X
Regular	—	X	—	—

	Heating element	Measure resistance of element from terminal to terminal.	10.71 – 10.08 Ω or 10.01 – 9.43 Ω
	Timer	Verify input and output voltage is present.	Refer to specific model Technical Sheet for timing sequence chart and functional description of the component.
5 4 1 2 3	Gas valve SECONDARY COIL HOLDING COIL BOOSTER COIL SENSOR IGNITOR	Measure resistance of following coils: Holding coil Terminals 1 and 2 ..... Booster coil Terminals 1 and 3 ..... Secondary coil Terminals 4 and 5	 1365 Ω ± 25 Ω 560 Ω ± 25 Ω 1220 Ω ± 50 Ω
	Sensor	Remove wires from sensor terminals Terminal to terminal	Any indication other than infinite Ω, replace sensor. Infinite < 1 Ω
	Ignitor	Measure resistance of the following: Terminal to terminal	 45 – 200 Ω

©2004 Maytag Services

Component Testing Information

WARNING

To avoid risk of electrical shock, personal injury, or death, disconnect power to dryer and shut-off gas supply before servicing, unless testing requires it.

Illustration	Component	Test Procedure	Results
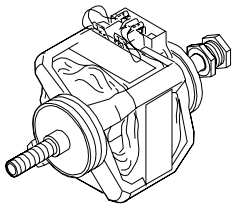	Motor	See “Internal Motor Diagram and Schematic” section	**See following section “Internal Motor Diagram and Schematic” for correct wiring contacts.**

Component Testing Information

WARNING

To avoid risk of electrical shock, personal injury, or death, disconnect power to dryer and shut-off gas supply before servicing, unless testing requires it.

Burner System Operation

Components

This burner has four basic components: A silicon carbide (glow bar) ignitor, burner tube, flame sensor, and a two-stage gas valve consisting of a split-coil valve and a secondary coil valve. The split-coil valve opens when the dryer thermostat calls for heat, while the secondary valve does not open until the ignitor has obtained ignition temperature.

Pre-Ignition Circuits

When the dryer thermostat calls for heat, circuits are completed through holding coil, flame sensor, booster coil, and ignitor. Both coils must be energized to open the split-coil valve. Once opened, holding coil can hold the valve open without assistance from the booster coil. The current travels around the secondary coil by the flame sensor, passing through the ignitor, causing it to get hot.

Burner Circuit

In approximately 30 seconds, the ignitor attains ignition temperature and the flame sensor (located on burner housing beside the ignitor) contacts open. A circuit is then completed through the secondary valve coil, opening the valve and allowing gas to flow. Ignition is made and the heat from the burner flame causes the flame sensor contacts to open.

Ignition System Features

Momentary Power Interruption

Upon resumption of power, flame sensor contacts will still be open, permitting secondary valve to open. However, with the secondary coil in the circuit, the booster coil cannot draw enough current to open the split-coil valve. When flame sensor contacts do reclose, the secondary valve will close, and the burner system will be in the normal pre-ignition circuit.

Flame Failure

In case of flame failure, the flame sensor contacts will reclose in about 45 seconds. This will close the secondary valve and the burner system will be in the normal pre-ignition circuit.

Ignition Failure

If flame is not established as flame sensor contacts open, secondary valve will remain open until flame sensor contacts reclose. Flame sensor will continue to recycle the ignitor and secondary valve (about once per minute) until ignition is made or dryer is turned off.

Electric Circuit to Ignition System

Testing Procedures

1. Disconnect power cord from power source.
2. Close gas valve shut-off valve.
3. Remove service access panel, by removing screws located at the bottom of panel. Pull outward on the bottom of service access panel to release panel locators from front panel.
4. Disconnect terminal connectors from gas valve.
5. Attach meter probes to terminals on gas valve connector to terminals 1 and 2. Set meter to read at least 120 VAC.
6. Plug power cord in, and start dryer in a heat setting.
7. Meter should register line voltage in all fabric settings, except FLUFF position which should indicate 0 VAC.
8. If meter does not indicate proper voltage readings as indicated in step 7, verify motor switch, thermostat, fabric switch or timer is operating properly.

Temperature Settings

Unit with Fixed 3–Position Switch

- FLUFF (No heat) and DELICATE average temperature setting of (129° F).
- PERMANENT PRESS / REGULAR average temperature setting of (160° F).

Unit with Fixed 4–Position Switch

- FLUFF (No heat) and DELICATE average temperature setting of (129° F).
- PERMANENT PRESS average temperature setting of (150° F).
- REGULAR average temperature setting of (160° F).

NOTE: During testing, dryer should operate for several minutes to stablize temperature.

©2004 Maytag Services

Internal Motor Diagram and Schematic

WARNING

To avoid risk of electrical shock, personal injury, or death, disconnect power to dryer and shut-off gas supply before servicing, unless testing requires it.

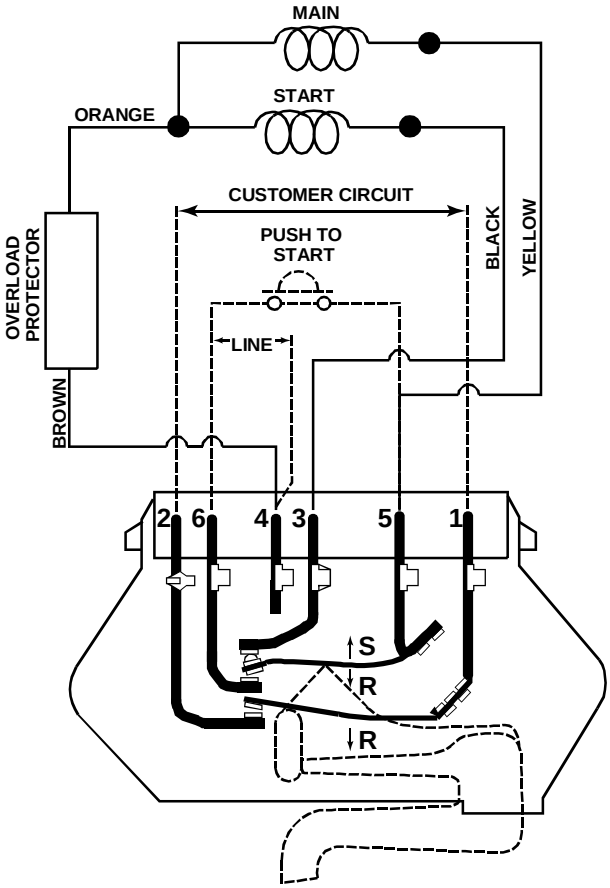

SWITCH SHOWN IN START POSITION

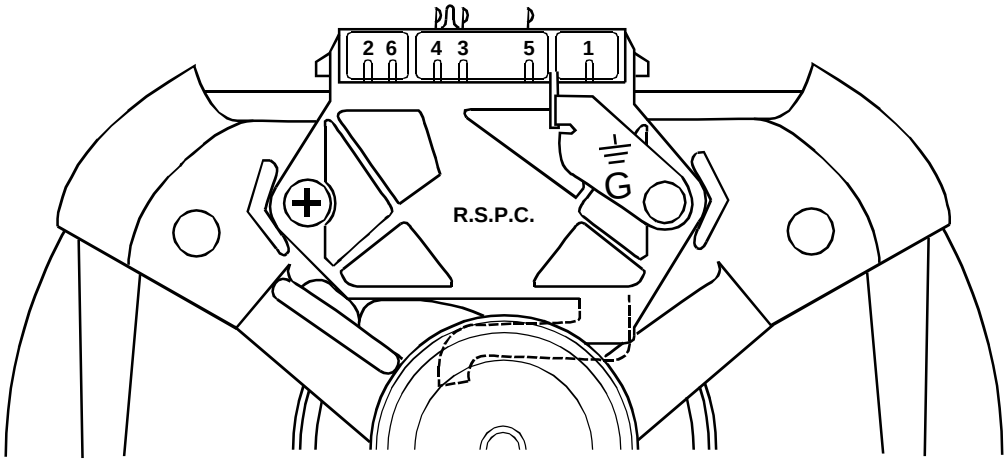

Motor Assembly

Troubleshooting Procedures

WARNING

To avoid risk of electrical shock, personal injury, or death, disconnect power to dryer and shut-off gas supply before servicing, unless testing requires it.

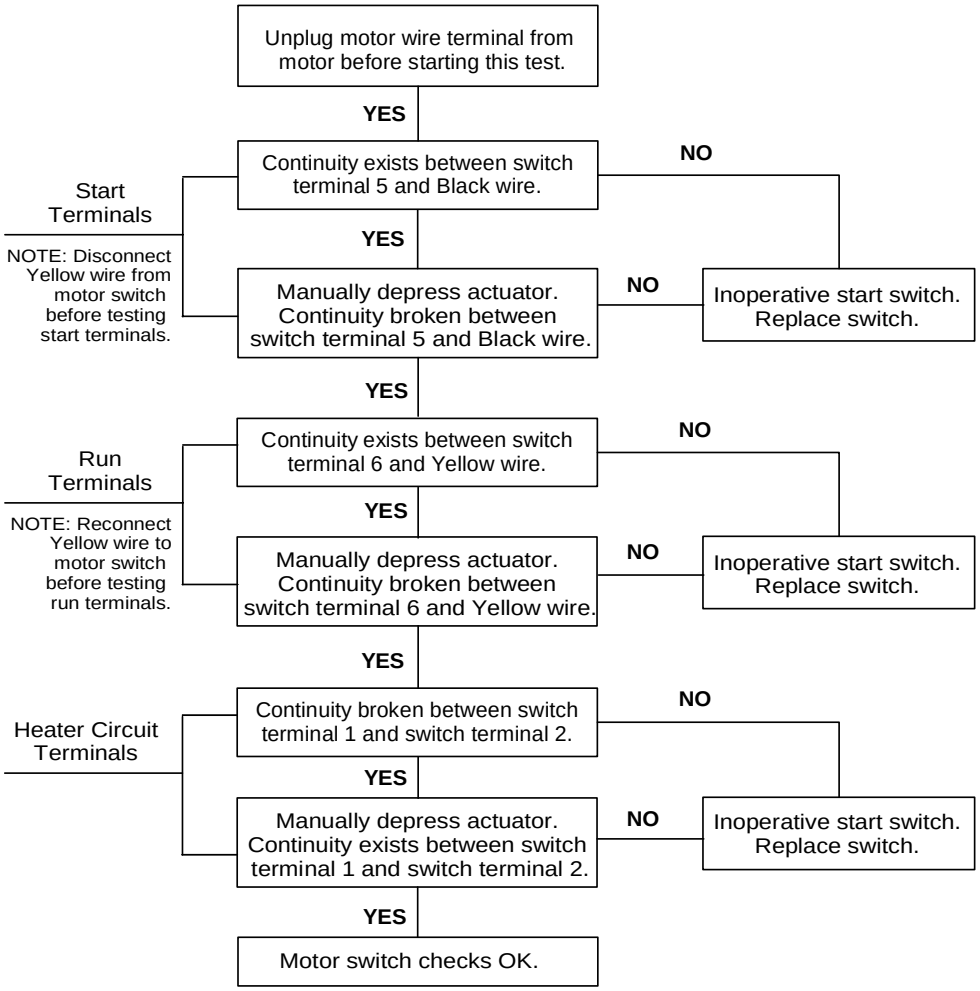

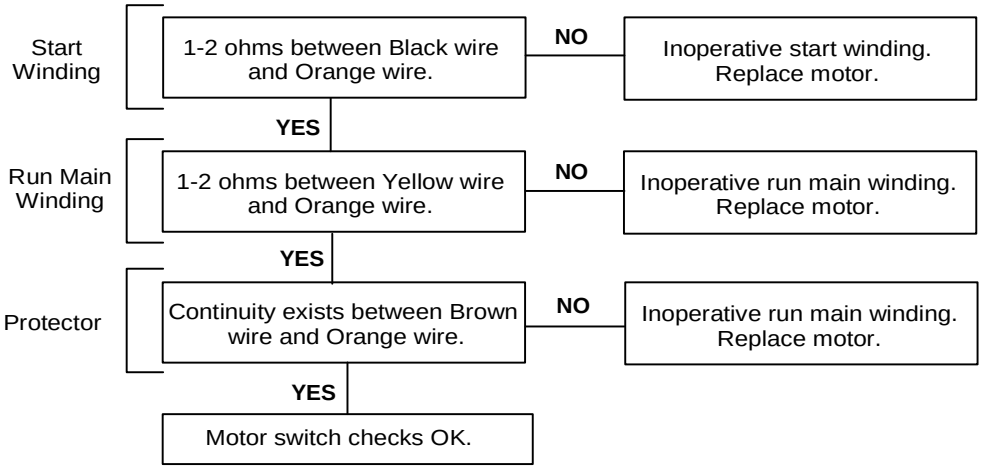

 ©2004 Maytag Services

Troubleshooting Procedures

WARNING

To avoid risk of electrical shock, personal injury, or death, disconnect power to dryer and shut-off gas supply before servicing, unless testing requires it.

NOTE: See “Component Testing Procedures” for testing component procedures.

1. Motor does not operate.	
Possible Cause	**Result**
Electrical power turned off, blown fuse. Power cord missing, mis-wired or not plugged in.	• Verify fuse is not loose or blown. • Verify circuit breaker is not tripped. • Verify power is present, correctly connected, and plugged into receptacle.
Loading door not closed, closing completely or failed door switch.	• Close door or verify door is closing completely. • Test door switch and replace if failed.
Timer not properly set.	• Reset timer. • Test timer and replace if failed.
Motor does not start or just hums.	• Test motor start switch and start windings.
Motor does not operate.	• Test motor start switch, start windings, and main windings.
Motor overload protector has tripped.	• Wait two to three minutes for overload protector to reset. If overload protector trips repeatedly.
Motor bearing binding.	• Remove cylinder belt and verify motor shaft turns freely. • Replace motor if shaft does not move freely.
Motor centrifugal switch sticky or plugged with lint.	• Remove dust or lint and spray with “SLYDE”, part number 131P4, to clean and lubricate.
Loose motor connection block.	• Disconnect and reconnect motor connection block to motor.
Broken, loose or incorrect wiring.	• Refer to appropriate wiring diagram for correct wiring.

2. Dryer stops in middle of cycle, quits after a couple loads, has a burning smell or cycles on motor thermal protector.	
Possible Cause	**Result**
Incorrect voltage.	• Refer to rating label located inside door well for correct voltage. • Refer to “Installation Instruction” for electrical requirements.
Dryer is overloaded.	• Remove part of the load. A normal washer load is a normal dryer load. Maximum load is ½ of the dryer cylinder with wet clothes.
Cylinder is binding.	• Check cylinder for out of round condition. • Check front and rear bulkheads for warping. • Check support rollers for binding. • Check cylinder seals and guides for wear or damage. • Check for clothing stuck in blower wheel. • Check for clothing lodged between cylinder baffle and bulkhead.
Failed motor switch or short in motor winding.	• Test motor switch and windings. Replace motor if failed.
Broken, loose or incorrect wiring.	• Refer to appropriate wiring diagram for correct wiring.

Troubleshooting Procedures

WARNING

To avoid risk of electrical shock, personal injury, or death, disconnect power to dryer and shut-off gas supply before servicing, unless testing requires it.

3. Motor operates but cylinder does not turn.	
Possible Cause	**Result**
Motor drive pulley to loose.	• Tighten pulley on motor shaft.
Belt not installed properly on pulley.	• Verify cylinder belt is installed correctly.
Broken cylinder belt.	• Replace cylinder belt.
Cylinder is binding.	• Check cylinder for out of round condition. • Check for clothing stuck in blower wheel. • Check front and rear bulkheads for warping. • Check support rollers for binding. • Check cylinder seals and guides for wear or damage. • Check for clothing lodged between cylinder baffle and bulkhead.
Weak, broken or disconnected idler lever spring.	• Replace or reconnect idler lever spring.
Cylinder belt on wrong side of idler lever.	• Reinstall cylinder belt correctly.
Oil on the outside of cylinder.	• Wipe excess oil from cylinder and cylinder belt.
Belt is installed inside out.	• Reinstall belt with ribbed surface against cylinder.
Idler lever is binding.	• Add grease between idler arm and motor mount. • Replace idler lever and bolt if damage.
Dryer is overloaded.	• Remove part of the load. A normal washer load is a normal dryer load. Maximum load is ½ of the dryer cylinder with wet clothes.
Incorrect motor installed.	• Refer to “Parts Manual” for proper part number.
Incorrect belt installed.	• Refer to “Parts Manual” for proper part number.

4. Motor does not stop.	
Possible Cause	**Result**
Incorrect wiring to motor switch.	• Verify proper wiring to motor switch, by using wiring diagram.
Failed door switch.	• Test door switch and replace if failed.
Failed timer.	• Test timer and replace if failed.
Failed electronic control.	• Test control and replace if failed.
Motor centrifugal switch sticky or plugged with lint.	• Remove dust or lint and spray with “SLYDE”, part number 131P4, to clean and lubricate.

5. Ignitor does not glow, (gas supply sufficient).	
Possible Cause	**Result**
No power applied to terminal leads on gas valve.	• Test time, selector switch, thermostat, motor switch, and wiring.
Failed flame sensor.	• Test flame sensor and replace if failed.
Ignitor cracked or open.	• Test ignitor and replace if failed.
Failed electronic control.	• Test electronic control and replace if failed.
Failed moisture sensing control.	• Test moisture sensing control and replace if failed.

©2004 Maytag Services

Troubleshooting Procedures

WARNING

To avoid risk of electrical shock, personal injury, or death, disconnect power to dryer and shut-off gas supply before servicing, unless testing requires it.

6. Heating assembly does not heat or burner does not ignite.	
Possible Cause	**Result**
Improper or inadequate exhaust system. Weather hood flapper may be restricted.	• See Installation Instructions for exhaust requirements.
Electrical power turned off, blown fuse.	• Verify fuse is not loose or blown. • Verify circuit breaker is not tripped.
Timer set to NO HEAT cycle, or inoperative.	• Reset timer to a heating cycle. • Test timer and replace if failed.
Failed timer.	• Test timer and replace if failed.
Failed cycling thermostat.	• Test cycling thermostat and replace if failed.
Failed limit thermostat.	• Test thermostat and replace if failed.
Failed motor switch.	• Test motor switch and replace if failed.
Failed electronic control.	• Test electronic control and replace if failed.
Electronic control displays “SH”.	• Thermistor is shorted. Replace failed thermistor.
Electronic control displays “OP”.	• Thermistor is open. Replace failed thermistor.
Failed moisture sensing control.	• Test moisture sensing control and replace if failed.
Electric models: Failed heater assembly.	• Test heater assembly and replace if failed.
Electric models: Failed thermal fuse.	• Test thermal fuse and replace if failed.
Gas models: Insufficient gas supply.	• Verify gas shut-off valve is not partially open or closed. • Verify proper gas pressure is being supplied to unit.
Gas models: Failed gas valve coils.	• Test gas valve coils and replace if failed.
Gas models: Failed flame sensor.	• Test flame sensor and replace if failed.
Gas models: Failed ignitor.	• Test ignitor and replace if failed.
Gas models: Wire terminals not properly connected to gas controls.	• Verify wire terminals are correctly connected to gas components.
Gas models: Restricted gas flow in orifice.	• Clean gas orifice.
Broken, loose or incorrect wiring.	• Refer to appropriate wiring diagram for correct wiring.

7. Burner ignites and goes out repeatedly.	
Possible Cause	**Result**
Improper or inadequate exhaust system. Weather hood flapper may be restricted.	• See “Installation Instructions” for exhaust requirements.
Insufficient gas supply.	• Verify gas shut-off valve is not partially open or closed. • Verify proper gas pressure is being supplied to unit.
Failed or cracked ignitor.	• Test ignitor and replace if failed.
Failed or intermittent gas valve coils.	• Test gas valve coils and replace if failed.
Burner heat not holding flame sensor contacts open.	• Test flame sensor and replace if failed. • Verify proper gas pressure is being supplied to unit.

Troubleshooting Procedures

WARNING

To avoid risk of electrical shock, personal injury, or death, disconnect power to dryer and shut-off gas supply before servicing, unless testing requires it.

8. Ignitor glows but burner does not ignite.	
Possible Cause	**Result**
Insufficient gas supply.	• Verify gas shut-off valve is not partially open or closed. • Verify proper gas pressure is being supplied to unit.
Ignitor and bracket installed improperly.	• Properly position ignitor and bracket and verify operation.
Open secondary or holding gas valve coil.	• Test gas valve coils and replace if failed.
Flame sensor contacts failed in closed position.	• Test flame sensor and replace if failed. • Verify proper gas pressure is being supplied to unit.
Flame sensor install improperly.	• Properly position flame sensor and verify operation.

9. Heater assembly or burner shuts off prematurely.	
Possible Cause	**Result**
Improper or inadequate exhaust system. Weather hood flapper maybe restricted.	• See “Installation Instructions” for exhaust requirements.
Insufficient gas supply.	• Verify gas shut-off valve is not partially open or closed. • Verify proper gas pressure is being supplied to unit.
Dryer not properly equipped for type of gas used.	• Verify gas type. • Refer to “Gas Burner Conversion Procedures”.
Improperly adjusted burner flame.	• Properly adjust burner flame.
Limit thermostat cycling off.	• Test limit thermostat and replace if failed.
Flame sensor contacts failed in closed position.	• Test flame sensor and replace if failed. • Verify proper gas pressure is being supplied to unit.
Failed timer.	• Test timer and replace if failed.
Failed electronic control.	• Test electronic control and replace if failed.
Failed moisture sensing control.	• Test moisture sensing control and replace if failed.
Broken, loose or incorrect wiring.	• Refer to appropriate wiring diagram for correct wiring.

10. Heater assembly or burner repeatedly cycles off on limit thermostat.	
Possible Cause	**Result**
External exhaust system longer or providing greater restriction than recommended.	• See “Installation Instructions” for exhaust requirements.
Improper or inadequate exhaust system. Weather hood flapper may be restricted.	• See “Installation Instructions” for exhaust requirements.
Clogged lint filter.	• Clean lint filter.
Lint located internally in dryer ductwork.	• Disassemble ductwork and clean.
Lint or other obstructions located inside external exhaust system.	• Disassemble and clean exhaust system.
Limit thermostat cycling at too low of a temperature.	• Test thermostat and replace if failed.
Failed thermistor.	• Test thermistor and replace if failed.
Air leak around loading door, due to failed seal or door catch.	• Check and replace loading door seal if failed. • Replace door catch if failed.
Air leak located at blower seal.	• Check and replace blower seal if failed.
Air leak located at cylinder seal.	• Check and replace cylinder seal if failed.

©2004 Maytag Services

Troubleshooting Procedures

WARNING

To avoid risk of electrical shock, personal injury, or death, disconnect power to dryer and shut-off gas supply before servicing, unless testing requires it.

11. Heater assembly or burner does not shut off.	
Possible Cause	**Result**
Improper motor switch. (Timer must be in a heat cycle).	• Test motor switch and replace if failed.
Motor does not stop.	• See “Internal Motor Diagram and Schematic”.
Heater assembly shorted.	• Test heater assembly and replace if failed.
Broken, loose or incorrect wiring.	• Refer to appropriate wiring diagram for correct wiring.

12. Clothes do not dry.	
Possible Cause	**Result**
Too much water left in articles being dried.	• Remove excess water from clothing.
Dryer is overloaded.	• Remove part of the load. A normal washer load is a normal dryer load. Maximum load is ½ of the dryer cylinder with wet clothes.
Clogged lint filter.	• Clean lint filter.
Load too small.	• Add one or two bath towels to the load.
Automatic cycle.	• Adjust timer to MORE DRY setting.
Selector switch or timer incorrectly set or failed.	• Reset selector switch or timer. • Test selector switch and timer and replace if failed.
Heater assembly or burner shuts off prematurely.	• See Troubleshooting Procedure (# 9. Heater assembly or burner shuts off prematurely).
Improper or inadequate exhaust system. Weather hood flapper maybe restricted.	• See “Installation Instructions” for exhaust requirements.
Failed moisture sensing control.	• Test moisture sensing control and replace if failed.
Belt not installed properly on pulley.	• Verify cylinder belt is installed correctly.
Gas line pressure too high or too low.	• Verify pressure to unit. If natural gas pressure exceeds 8 WCP and is lower than 4 WCP, refer consumer to contact gas company.

13. Signal does not operate correctly.	
Possible Cause	**Result**
Failed moisture sensing control.	• Test moisture sensing control and replace if failed.
Failed electronic control board.	• Test electronic control board and replace if failed.
Failed signal selector switch.	• Test signal selector switch and replace if failed.
Failed adjustable buzzer.	• Test adjustable buzzer and replace if failed.
Failed timer.	• Test timer and replace if failed.

Troubleshooting Procedures

WARNING

To avoid risk of electrical shock, personal injury, or death, disconnect power to dryer and shut-off gas supply before servicing, unless testing requires it.

14. Timer does not advance in AUTOMATIC cycle.	
Possible Cause	**Result**
Failed cycling thermostat.	• Test cycling thermostat and replace if failed.
Failed resistor.	• Test resistor and replace if failed.
Heater assembly does not heat or burner does not ignite.	• See Troubleshooting Procedure (# 6. Heating assembly does not heat or burner does not ignite).
Heater assembly or burner shuts off prematurely.	• See Troubleshooting Procedure (# 9. Heater assembly or burner shuts off prematurely).
Improper or inadequate exhaust system. Weather hood flapper maybe restricted.	• See “Installation Instructions” for exhaust requirements.
Drying load too large.	• Remove some articles to reduce load size.
Timer motor is inoperative.	• Select a drying cycle and activate start switch. • Rotate timer knob until signal sounds. • Release timer knob. • Signal should stop within ten minutes. If not, replace timer.

Possible air leaks at seals.	• Check and replace any failed seals in the following areas:
	  • Seal between loading door and front panel.
	  • Seal between front panel and front bulkhead.
	  • Seal between blower cover and air duct.
	  • Seal between cylinder and front or rear bulkhead.
	  • Seal between upper and lower air ducts.

Failed moisture sensing control.	• Test moisture sensing control and replace if failed.

15. Clothing is too hot when removing from dryer.	
Possible Cause	**Result**
Improper or inadequate exhaust system. Weather hood flapper may be restricted.	• See “Installation Instructions” for exhaust requirements.
Clothing is removed from dryer before cycle has been completed.	• Allow dryer to go through the cooling down cycle before removing.
Failed cycling thermostat or failed thermostat heater on DELICATE cycle.	• Test cycling thermostat or thermostat heater and replace if failed.
Inoperative timer (not allowing cool down).	• Test timer and replace if failed.

Possible air leaks at seals.	• Check and replace any failed seals in the following areas:
	  • Seal between loading door and front panel.
	  • Seal between front panel and front bulkhead.
	  • Seal between blower cover and air duct.
	  • Seal between cylinder and front or rear bulkhead.
	  • Seal between upper and lower air ducts.

Failed timer.	• Test timer and replace if failed.
Failed moisture sensor.	• Test moisture sensor and replace if failed.

©2004 Maytag Services

Disassembly Procedures

⚠ WARNING

To avoid risk of electrical shock, personal injury, or death, disconnect power and shut-off gas supply valve to unit before servicing.

NOTE: To avoid damaging or scratching the surface a soft cloth should be placed over the top of the unit.

Control Hood Assembly

1. Disconnect power supply to unit.
2. Remove screws securing control hood assembly to control hood rear panel.

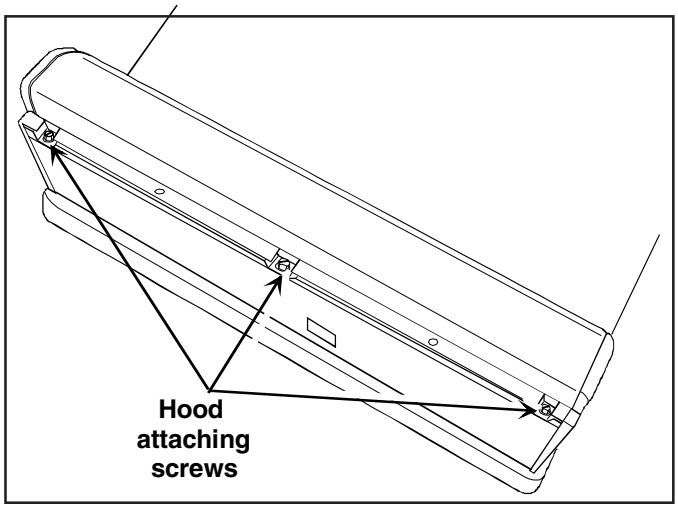

3. Rotate hood assembly forward to access inner wiring.

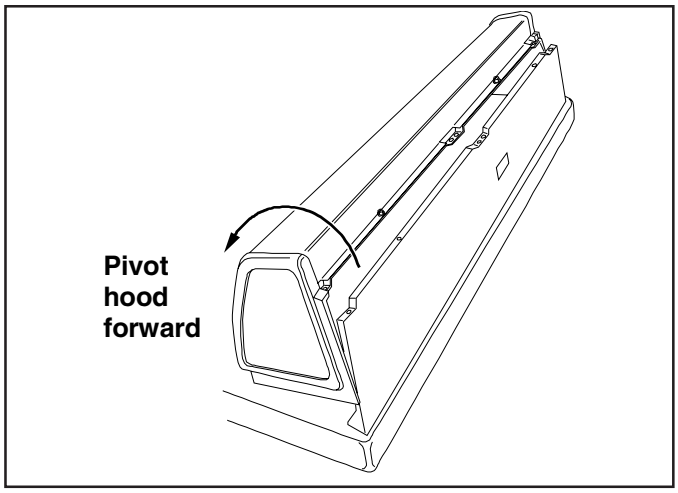

4. Remove bottom of control hood from clips located on cabinet top.
5. Disconnect and label wire connections from components and remove components from control hood assembly, see individual component procedures.
6. Reverse procedure to reassemble.

NOTE: Refer to appropriate wiring diagram when rewiring components.

Control Hood End Panels

1. Remove control hood assembly, see “Control Hood Assembly” procedure steps 1 – 4.
2. Remove screws securing end panels to control mounting plate.
3. Reverse procedure to reassemble.

Electronic Control

1. Disconnect power supply to unit.
2. Loosen control hood assembly, see “Control Hood Assembly” procedure steps 1 – 3.
3. Disconnect wires from electronic control.
4. Remove screws securing electronic control to control hood mounting plate.
5. Reverse procedure to reassemble.

NOTE: When removing or installing an electronic control, handle control board by the edges to prevent damaging control.

NOTE: See appropriate wiring diagram when rewiring components.

Timer

1. Disconnect power supply to unit.
2. Loosen control hood assembly, see “Control Hood Assembly” procedure steps 1 – 3.
3. Disconnect and label wire terminals from timer.
4. Remove timer knob by pulling outward, away from the front of the graphic panel.
5. Remove screw securing timer to control hood mounting plate.
6. Raise metal tab and rotate timer to remove from slotted location.

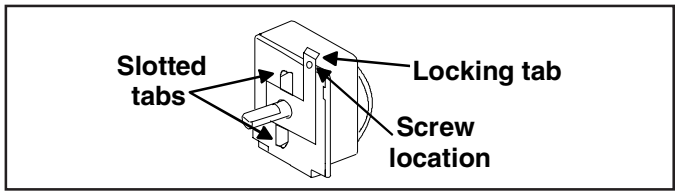

7. Reverse procedure to reassemble.

NOTE: See appropriate wiring diagram when rewiring components.

Disassembly Procedures

⚠ WARNING

To avoid risk of electrical shock, personal injury, or death, disconnect power and shut-off gas supply valve to unit before servicing.

Signal Switch

1. Disconnect power supply to unit.
2. Slide a soft cloth under the knob, wrapping the entire knob and pull gently away from the control panel.
3. Loosen control hood assembly, see “Control Hood Assembly” procedure steps 1 and 2.
4. Disconnect wires from switch terminals.
5. Raise metal tab next to the switch and rotate switch to release switch from control hood mounting plate.

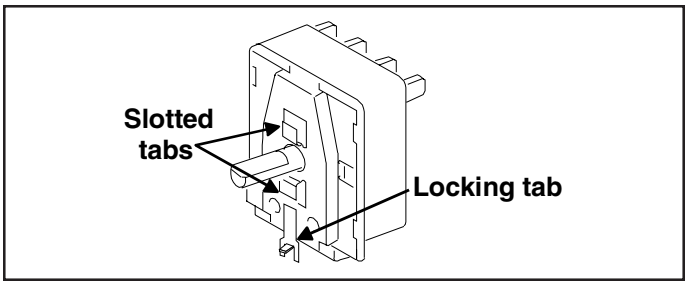

6. Reverse procedure to reassemble.

NOTE: See appropriate wiring diagram when rewiring components.

Selector Switch

1. Disconnect power supply to unit.
2. Slide a soft cloth under the knob, wrapping the entire knob and pull gently away from the control panel.
3. Loosen control hood assembly, see “Control Hood Assembly” procedure steps 1 and 2.
4. Disconnect wires from switch terminals.
5. Remove screws securing switch to control hood mounting plate.

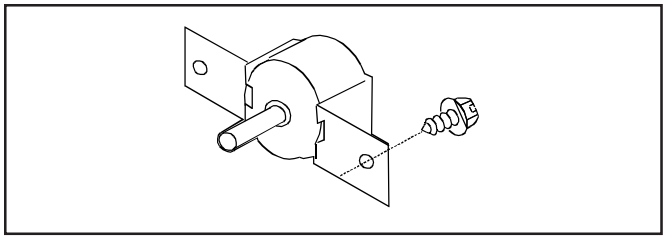

6. Reverse procedure to reassemble.

NOTE: See appropriate wiring diagram when rewiring components.

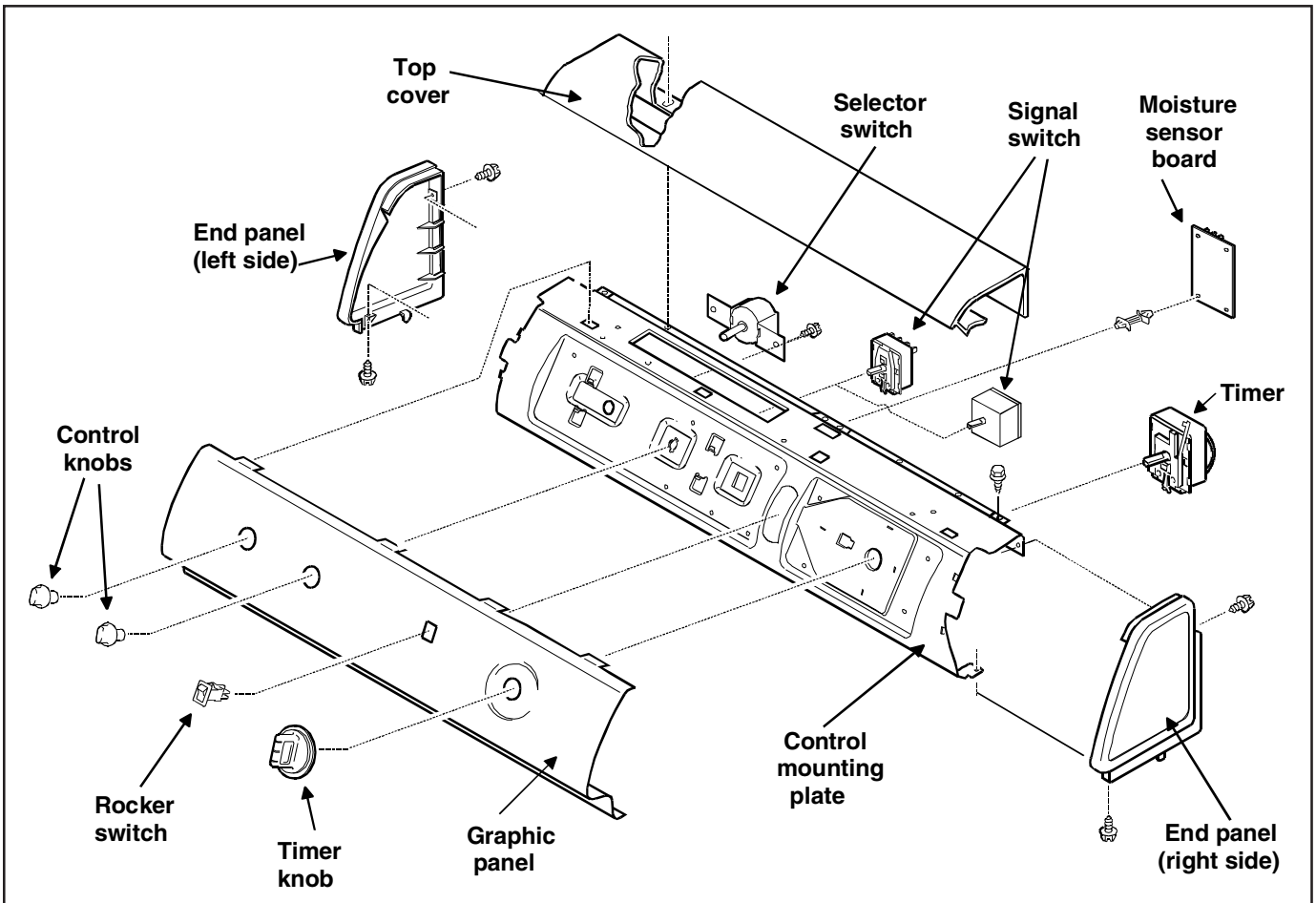

Typical Control Panel Assembly

 ©2004 Maytag Services

Disassembly Procedures

⚠ WARNING

To avoid risk of electrical shock, personal injury, or death, disconnect power and shut-off gas supply valve to unit before servicing.

Rocker Switch

1. Disconnect power supply to unit.
2. Loosen control hood assembly, see “Control Hood Assembly” procedure steps 1 and 2.
3. Disconnect wire terminals from switch.
4. Squeeze plastic tabs located on top and bottom of switch and push switch out through the front of control panel.
5. Reverse procedure to reassemble.

Graphic Panel

1. Disconnect power supply to unit.
2. Remove all knobs.
3. Loosen control hood assembly, see “Control Hood Assembly” procedure steps 1 and 2.
4. Remove rocker switch, see “Rocker Switch” procedure (some models).
5. Remove screws securing top cover to control mounting plate and remove top cover.
6. Remove screws securing end panels (each side) and remove end panels.
7. Remove grounding wire secured to control hood mounting plate (some models).
8. Bend tabs on graphic panel (located inside of control hood) straight out towards the rear.
9. Remove graphic panel from front of control mounting plate.
10. Reverse procedure to reassemble.

NOTE: Refer to appropriate wiring diagram when rewiring components.

Loading Door and Door Hinges

1. Disconnect power supply to unit.
2. Open loading door to gain access to hinges.
3. Remove screws securing loading door to hinges.
4. Remove screws securing hinges to cabinet.
5. Reverse procedure to reassemble.

Door Pull

1. Disconnect power supply to unit.
2. Remove loading door, see “Loading Door and Door hinges” procedure.
3. Remove screws securing outer door to inner door assembly.
4. Remove door handle wedge by prying outward to release clip located in the center of door handle wedge.
5. Push door pull outward to bypass plastic tabs, then slide door pull to release plastic tabs from door.
6. Reverse procedures to reassemble.

Door Strike and Door Seal

1. Disconnect power supply to unit.
2. Open loading door.
3. Remove screws securing door strike and bracket.

NOTE: Screws on the end of door may need to be loosened to allow for striker and bracket removal.

4. Grasp either end of door seal at the bottom of the door. Pull gently to remove seal from tabs on inner door panel.

NOTE: When replacing seal, verify seal is not stretched or distorted. Grooved tabs on seal should be installed on each tab of the inner door panel. Split on the seal should be located at the bottom of the door.

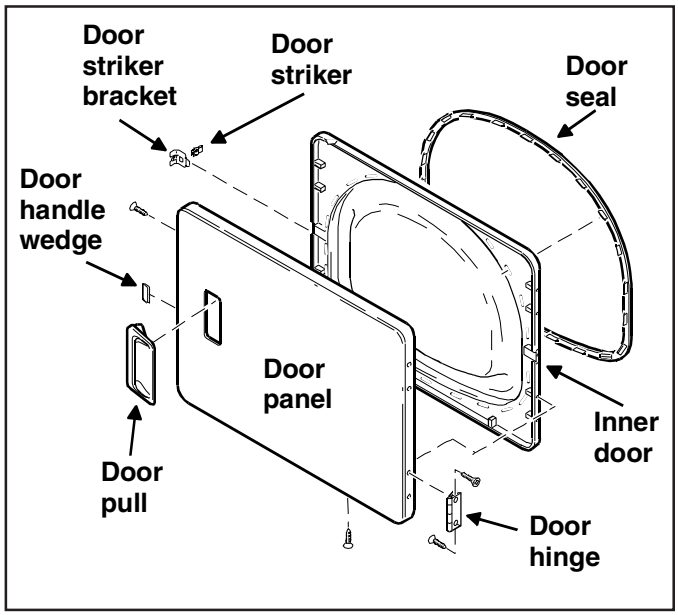

Door Switch

1. Disconnect power supply to unit.
2. Remove front panel, see “Front Panel” procedure steps 1 – 4.
3. Depress plastic tabs on top and bottom of switch, while pushing outward through the front of front panel.
4. Reverse procedure to reassemble.

Door Catch

1. Disconnect power supply to unit.
2. Remove front panel, see “Front Panel” procedure steps 1 – 4.
3. Depress plastic tabs on top and bottom of door catch and push metal clip together, while pushing door catch outward through the front of front panel.
4. Reverse procedure to reassemble.

Disassembly Procedures

⚠ WARNING

To avoid risk of electrical shock, personal injury, or death, disconnect power and shut-off gas supply valve to unit before servicing.

Door Reversal Procedure

1

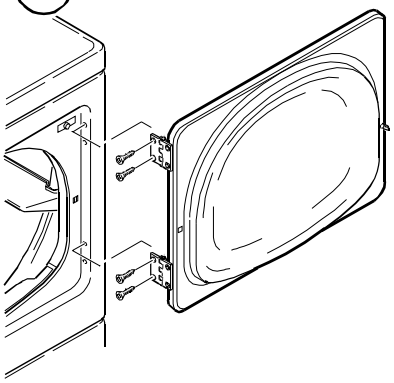

Remove four hinge attaching screws.

2

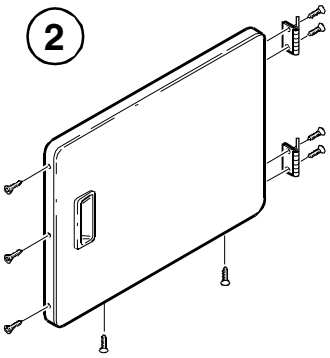

Remove all nine screws.

3

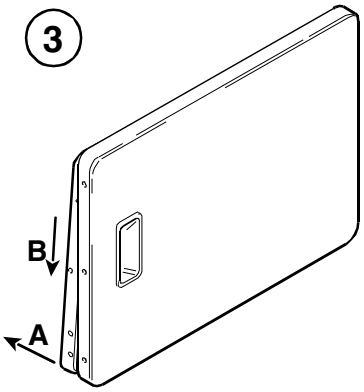

Pull bottom of door liner out, then pull downward, removing door liner from door panel.

4

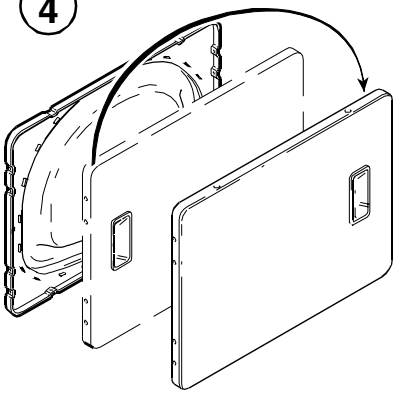

Rotate door panel 180 degrees as shown.

5

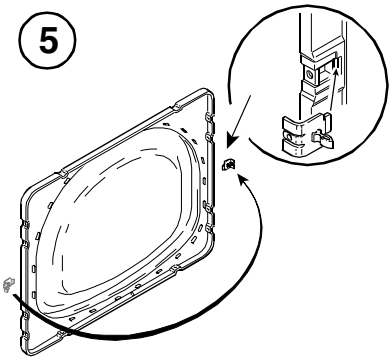

Remove door strike from door liner and reinstall on opposite side.

6

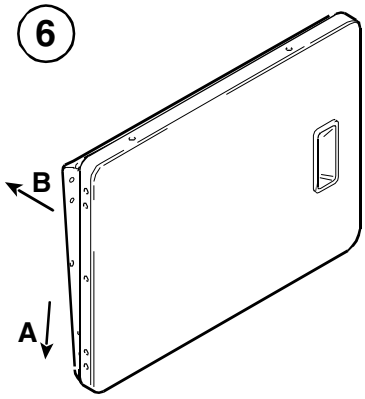

Insert liner under flange on bottom then push bottom of door liner into place.

7

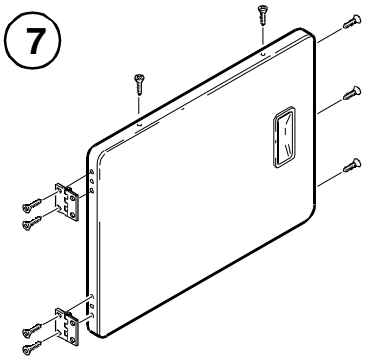

Reinstall nine screws removed in Step 2.

8

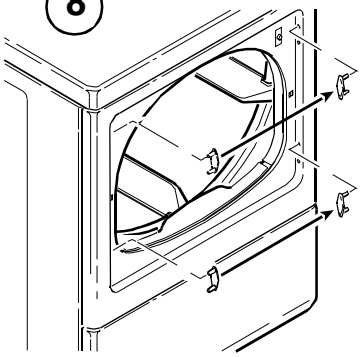

Using a screwdriver, remove door plugs, and reinstall on opposite side of door opening.

9

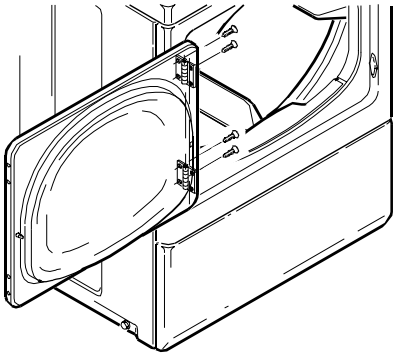

Reinstall hinge screws removed in Step 1.

©2004 Maytag Services

Disassembly Procedures

⚠ WARNING

To avoid risk of electrical shock, personal injury, or death, disconnect power and shut-off gas supply valve to unit before servicing.

Service Access Panel

- Remove screws located at bottom edge of service access panel to release service access panel.

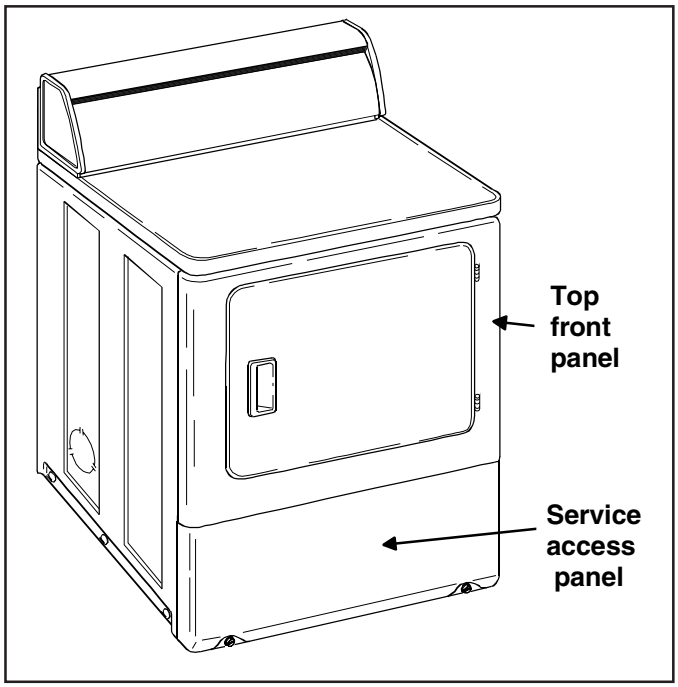

NOTE: Top edge of service access panel is held in place by two panel locator(s) located on top flange of service access panel.

Front Panel

NOTE: Service access panel must be removed first to remove front panel.

NOTE: Top edge of front panel is held in place by two spring clips and panel locator(s) located on top flange of the front panel.

1. Disconnect power supply to unit.
2. Remove screws securing bottom of front panel.
3. Lift the bottom of front panel outward to release the spring clips and panel locator(s).
4. Disconnect and label wire terminals from door switch.
5. Reverse procedure to reassemble.

Front Panel Seal

1. Remove front panel, see “Front Panel” procedure.
2. Remove front panel seal from flange around the door opening.

NOTE: Verify panel seal is properly positioned when installing front panel.

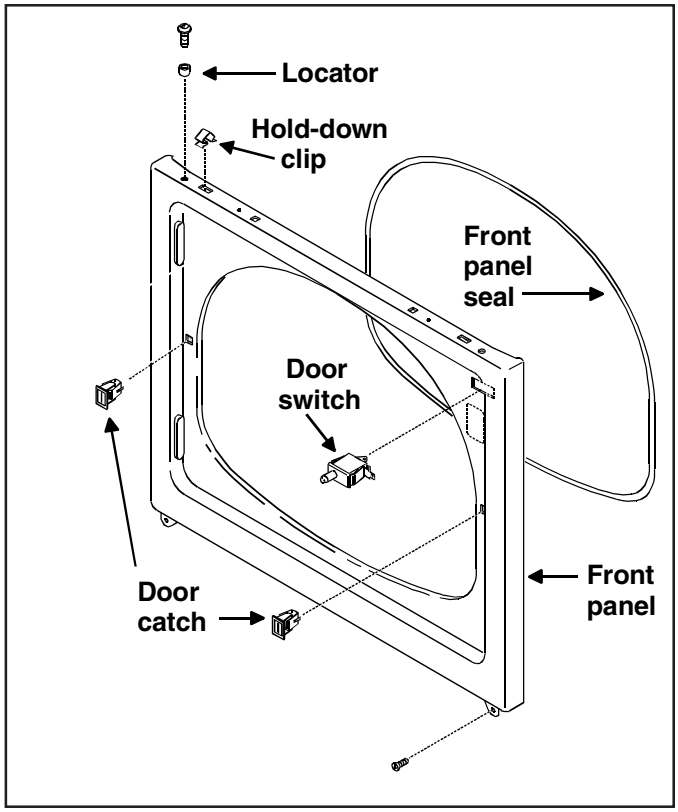

Hold–Down Clips and Locators

1. Remove front panel, see “Front Panel” procedure steps 1 – 4.
2. Compress and remove failed hold–down clip(s) from front panel.
3. Remove screws securing failed locator(s).
4. Reverse procedure to reassemble.

Cabinet Top

1. Disconnect power supply to unit.
2. Remove control hood assembly, see “Control Hood Assembly” procedure.
3. Remove front panel, see “Front Panel” procedure steps 1 – 3.
4. Remove screws securing cabinet top to side panels.
5. Raise cabinet top to a vertical position.
6. Carefully disconnect wire harness and feed harness through cabinet top access hole.

NOTE: Cabinet top may be raised and hinged on the rear hold-down hinges or supported against wall while servicing dryer.

7. Disconnect and remove any components needed for new top.
8. Reverse procedure and reassemble.

Disassembly Procedures

⚠ WARNING

To avoid risk of electrical shock, personal injury, or death, disconnect power and shut-off gas supply valve to unit before servicing.

Front Bulkhead Assembly

1. Disconnect power supply to unit.
2. Remove front panel, see “Front Panel” procedure.
3. Remove belt from motor and idler pulleys.
4. Remove screws securing bulkhead to front side panels.
5. Lift bulkhead assembly out of slots located in side panels and remove.
6. Remove cylinder glides from each glide bracket.
   - Unsnap glide from each glide bracket.

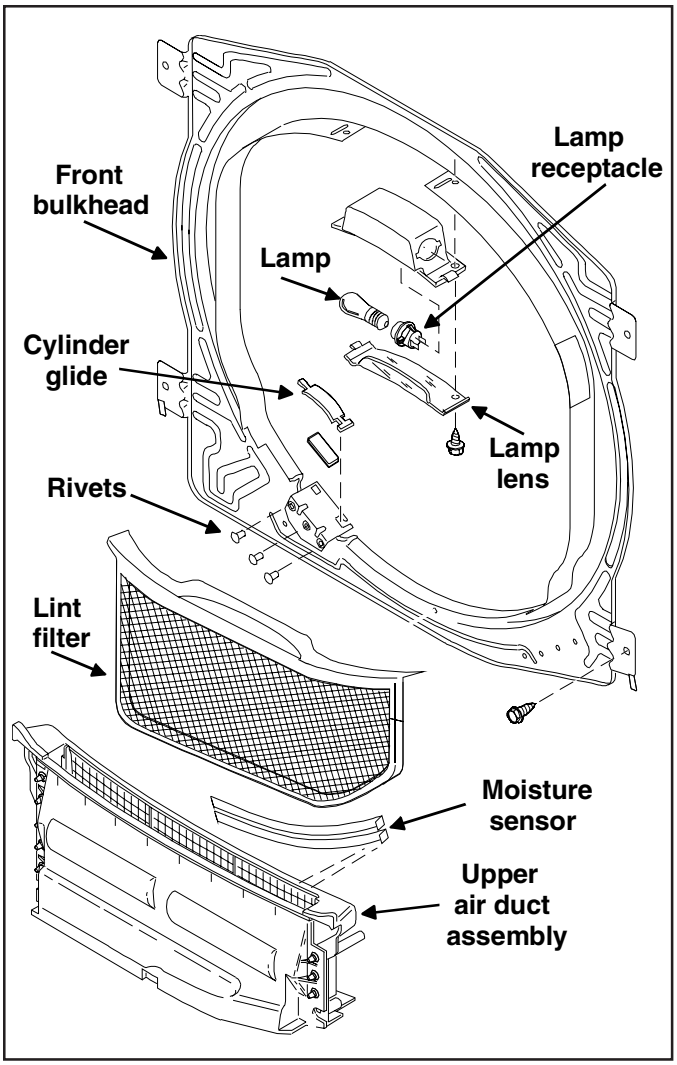

7. Reverse procedure to reassemble.

NOTE: Verify felt seal on exhaust fan cover is airtight on flange of duct. If seal is installed improperly air flow will be restricted which can cause poor dryer performance.

When installing the cylinder seal it is important that the stitching on the seal face towards the dryer center. The short flap must be glued to the bulkhead and the long flap left loose.

NOTE: Adhere sealant (No. 22506P) to bulkhead using a continuous bead completely around the entire flange where the felt seal contacts the bulkhead.

Front Air Duct

1. Remove screws located at bottom edge of service access panel to release service access panel.
2. Gently lower the access panel to disengage locators from bottom edge of front panel.
3. Open loading door and remove lint filter.

NOTE: When installing lint filter, be sure to install the filter with the word “FRONT” facing the front of the dryer. If filter is installed backwards, lint will accumulate in exhaust system, which can adversely affect dryer performance.

4. Remove screws securing duct to front bulkhead and remove air duct.
5. Reverse procedure to reassemble.

NOTE: When reassembling, be sure seal on exhaust fan cover makes airtight seal on flange of duct. If the seal is installed improperly, the airflow through the exhaust system will be restricted which can adversely affect dryer performance.

Moisture Sensor

1. Remove front air duct, see “Front Air Duct” procedure steps 1 – 4.
2. Disconnect wire terminals connected to moisture sensor.
3. Unsnap moisture sensor from air duct.
4. Reverse procedure to reassemble.

Cylinder Light

1. Disconnect power supply to unit.
2. Open loading door and remove screws securing lens cover to bulkhead.
3. Remove bulb by unscrewing bulb counterclockwise.
4. Reverse procedure to reassemble.

©2004 Maytag Services

Disassembly Procedures

⚠ WARNING

To avoid risk of electrical shock, personal injury, or death, disconnect power and shut-off gas supply valve to unit before servicing.

Cylinder Light Receptacle

1. Disconnect power supply to unit.
2. Remove front panel, see “Front Panel” procedure steps 1 – 4.
3. Disconnect and label wire terminals from light receptacle.
4. Squeeze plastic tabs together and push light receptacle out of front bulkhead.
5. Reverse procedure to reassemble.

NOTE: Refer to appropriate wiring diagram when rewiring switch.

Cylinder Belt

1. Disconnect power supply to unit.
2. Remove front panel, see “Front Panel” procedure steps 1 – 4.
3. Disengage belt from motor and idler pulleys.
4. Remove front bulkhead, see “Front Bulkhead” procedure.
5. While supporting cylinder, carefully remove belt from cylinder.

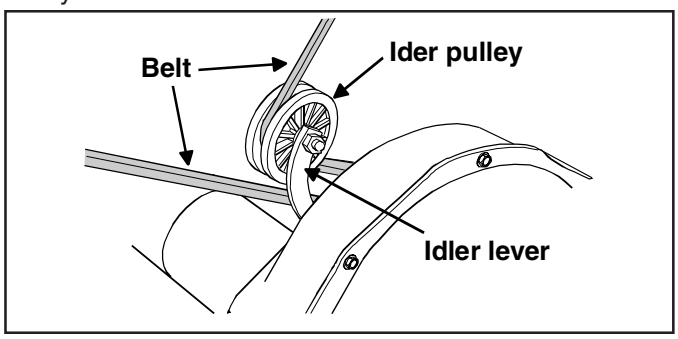

6. Reverse procedure to reassemble.

NOTE: Be sure belt is properly installed on motor and idler pulleys, and is on the correct side of the idler lever. Belt must be positioned around cylinder between center and rear baffle screws with the ribbed surface against the cylinder. After installing belt, manually rotate cylinder counterclockwise to check that belt is properly aligned.

NOTE: When reassembling, be sure seal on exhaust fan cover makes airtight seal on flange of duct. If the seal is installed improperly, the airflow through the exhaust system will be restricted which can adversely affect dryer performance.

NOTE: Refer to appropriate wiring diagram when rewiring.

Cylinder Assembly

1. Disconnect power supply to unit.
2. Remove front panel, see “Front Panel” procedure steps 1 – 4.
3. Disengage belt from motor and idler pulleys.
4. Remove front bulkhead, see “Front Bulkhead” procedure.
5. Remove screws securing cabinet top and lift cabinet top to a vertical position by hinging it on the rear hold-down hinges.

NOTE: Cabinet top may be raised and hinged on the rear hold-down hinges, or supported against a wall behind the dryer.

6. Carefully remove cylinder out through front of dryer.
7. Remove screws securing baffles to cylinder.

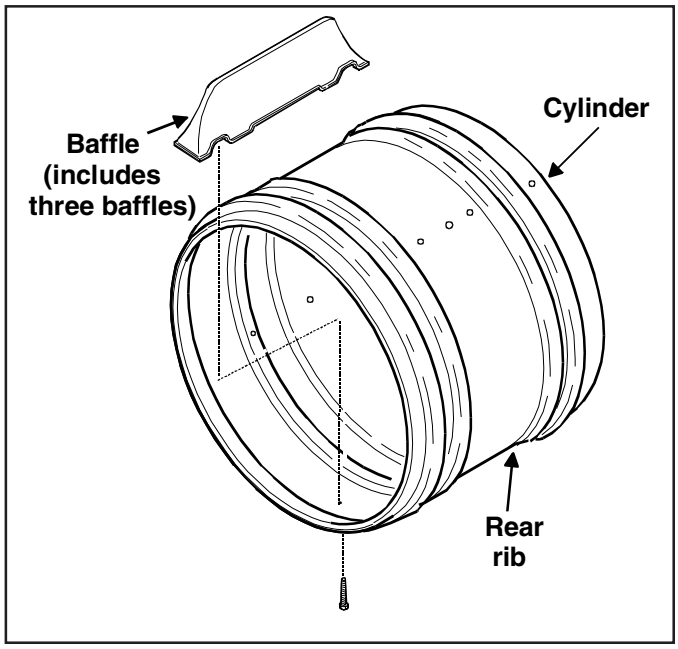

8. Reverse procedure to reassemble.

NOTE: When reassembling, be sure seal on exhaust fan cover makes airtight seal on flange of duct. If the seal is installed improperly, the airflow through the exhaust system will be restricted which can adversely affect dryer performance.

NOTE: Refer to appropriate wiring diagram when rewiring.

Disassembly Procedures

⚠ WARNING

To avoid risk of electrical shock, personal injury, or death, disconnect power and shut-off gas supply valve to unit before servicing.

Cylinder Rollers

1. Disconnect power supply to unit.
2. Remove front panel, see “Front Panel” procedure steps 1 – 4.
3. Disengage belt from motor and idler pulleys.
4. Remove front bulkhead, see “Front Bulkhead” procedure.
5. Remove screws securing cabinet top and lift cabinet top to a vertical position by hinging it on the rear hold-down hinges.

NOTE: Cabinet top may be raised and hinged on the rear hold-down hinges, or supported against a wall behind the dryer.

6. Carefully remove cylinder out through front of dryer.
7. Remove retaining ring from shaft and slide remaining components from shaft.

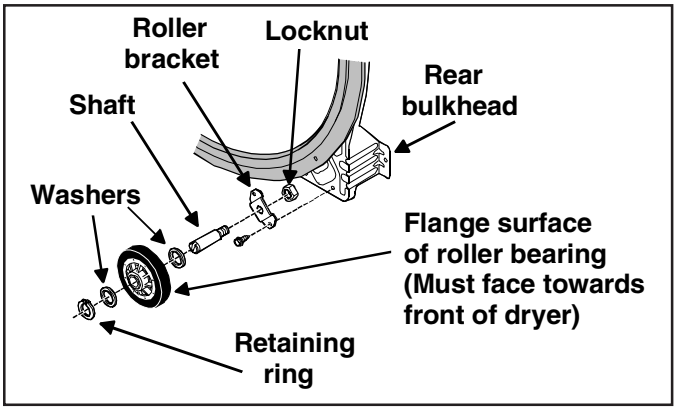

8. Reverse procedure to reassemble.

NOTE: When replacing the cylinder roller, it is important that cylinder roller is installed with the flanged surface of the roller bearing facing towards the front of the dryer.

Rear Seal

1. Disconnect power supply to unit.
2. Remove front panel, see “Front Panel” procedure steps 1 – 4.
3. Disengage belt from motor and idler pulleys.
4. Remove front bulkhead, see “Front Bulkhead” procedure.
5. Remove screws securing cabinet top and lift cabinet top to a vertical position by hinging it on the rear hold-down hinges.

NOTE: Cabinet top may be raised and hinged on the rear hold-down hinges, or supported against a wall behind the dryer.

6. Carefully remove cylinder out through front of dryer.
7. Pull rear cylinder seal from flanged edge of rear bulkhead.
8. Clean and prepare surface for new seal attachment.

NOTE: When installing the cylinder seal, it is important to remember these two important steps:

- The stitching on the seal must face towards the dryer center.
- The short flap must be glued to the bulkhead and the long flap left loose.

NOTE: The seal can be adhered to the bulkhead using replacement sealant No. 22506P. This is accomplished by applying a bead of sealant around the entire flanged area where the seal contacts the bulkhead.

NOTE: When reassembling, be sure seal on exhaust fan cover makes airtight seal on flange of duct. If the seal is installed improperly, the airflow through the exhaust system will be restricted which can adversely affect dryer performance.

NOTE: When reinstalling belt, be sure belt is properly installed on motor and idler pulleys are on the correct side of the idler lever. Belt must be positioned between center and rear baffle screws with the ribbed surface against the cylinder. After installing belt, manually rotate cylinder counterclockwise to check that belt is properly aligned.

Rear Bulkhead and Heater Box

1. Disconnect power supply to unit.
2. Remove front panel, see “Front Panel” procedure steps 1 – 4.
3. Disengage belt from motor and idler pulleys.
4. Remove front bulkhead, see “Front Bulkhead” procedure.
5. Remove screws securing cabinet top and lift cabinet top to a vertical position by hinging it on the rear hold-down hinges.

NOTE: Cabinet top may be raised and hinged on the rear hold-down hinges, or supported against a wall behind the dryer.

6. Carefully remove cylinder out through front of dryer.

NOTE: When reinstalling belt, be sure belt is properly installed on motor and idler pulleys and is on the correct side of the idler lever. Belt must be positioned around cylinder between center and rear baffle screws with the ribbed surface against the cylinder. After installing belt, manually rotate cylinder counterclockwise to check that belt is properly aligned.

©2004 Maytag Services

Disassembly Procedures

⚠ WARNING

To avoid risk of electrical shock, personal injury, or death, disconnect power and shut-off gas supply valve to unit before servicing.

NOTE: When reassembling, be sure seal on exhaust fan cover makes airtight seal on flange of duct. If the seal is installed improperly, the airflow through the exhaust system will be restricted which can adversely affect dryer performance.

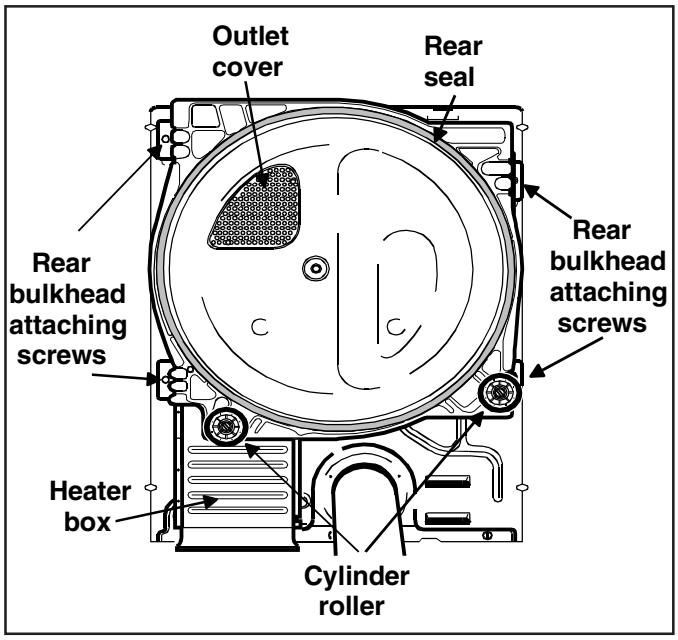

Gas Models:

1. Remove burner tube attaching screw from right side of burner housing.
2. Gently move burner tube toward rear of dryer to disengage tab from slot on left side of burner housing.
3. Remove screw securing front of burner housing to dryer base and move housing away from heat shroud.
4. Remove screw securing burner housing to heat shroud.
5. While supporting rear bulkhead, remove screws securing rear bulkhead to dryer cabinet back, then lift complete assembly out of dryer.
6. Remove screws securing heater box to rear bulkhead.
7. Remove and transfer components to new bulkhead.
8. Reverse procedure to reassemble.

Electric Models:

1. Remove two screws holding element and plate to heater box, then pull element down and away from heater box.
2. While supporting rear bulkhead, remove screws securing rear bulkhead to dryer cabinet back, then lift complete assembly out of dryer.
3. Remove heater box from rear bulkhead.
4. Remove and transfer components to new bulkhead.
5. Reverse procedure to reassemble.

Heating System

Gas Valve Regulator

1. Disconnect power supply to unit.
2. Remove service access panel, see “Service Access Panel” procedure.
3. Close main gas shut-off valve.
4. Disconnect terminal wires and plugs from gas valve coils.
5. Loosen and disconnect gas pipe from gas valve regulator at the union nut.

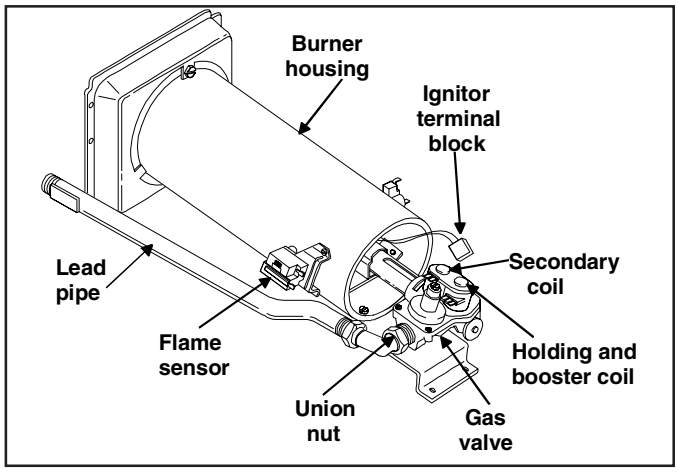

6. Remove screws securing gas valve regulator and bracket to base.
7. Slide gas valve regulator and bracket away from burner tube air shutter and out of unit.
8. Remove screws securing gas valve regulator to bracket.
9. Reverse procedure to reassemble.

Burner Tube, Ignitor, and Bracket

1. Disconnect power supply to unit.
2. Remove service access panel, see “Service Access Panel” procedure.
3. Close main gas shut-off valve and disconnect wire terminal from ignitor assembly.
4. Remove screw securing burner tube to burner housing located on the right side of burner housing.
5. Slide burner tube towards the rear to disengage tab from slot located on left side of burner housing.

NOTE: Ignitor is very fragile and can be easily damaged.

6. Slide air shutter end of burner tube to the left and gently remove burner tube and ignitor assembly.
7. Remove screw securing ignitor and bracket to burner tube.
8. Reverse procedure to reassemble.

NOTE: Only handle ignitor by ceramic portion. **DO NOT** handle ignitor by carbide portion of ignitor. Oil, grease, and other impurities will cause ignitor to burn out quicker.

Disassembly Procedures

⚠ WARNING

To avoid risk of electrical shock, personal injury, or death, disconnect power and shut-off gas supply valve to unit before servicing.

Flame Sensor

1. Disconnect power supply to unit.
2. Remove service access panel, see “Service Access Panel” procedure.
3. Close main gas shut-off valve.
4. Disconnect and label wire terminals from flame sensor.
5. Remove screws securing flame sensor to burner housing.

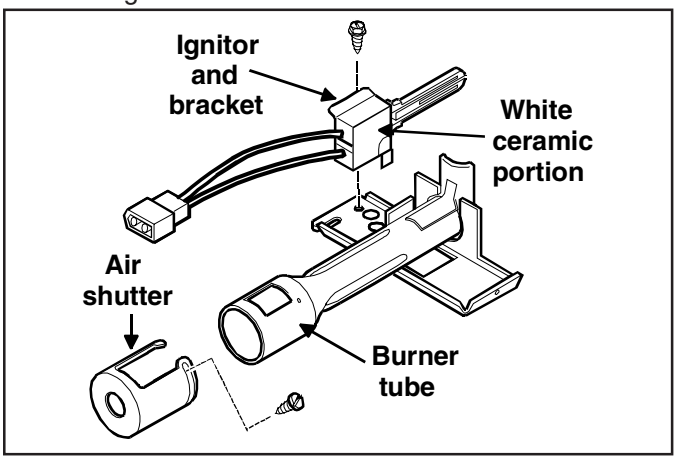

6. Reverse procedure to reassemble.

Burner Housing and Heat Shroud

1. Disconnect power supply to unit.
2. Remove service access panel, see “Service Access Panel” procedure.
3. Remove burner tube, ignitor, and bracket, see “Burner Tube, Ignitor, and Bracket” procedure.
4. Remove screw securing burner housing to heat shroud.
5. Remove screw securing front of burner housing to dryer base.
6. Carefully remove burner housing out the front of unit.
7. Remove components attached to burner tube.
8. Remove screws securing heat shroud to heater box and remove.
9. Reverse procedure to reassemble.

Limit Thermostat (Gas Models)

1. Disconnect power supply to unit.
2. Remove service access panel, see “Service Access Panel” procedure.
3. Disconnect and label wire terminals from limit thermostat.
4. Remove screws securing limit thermostat to burner housing.

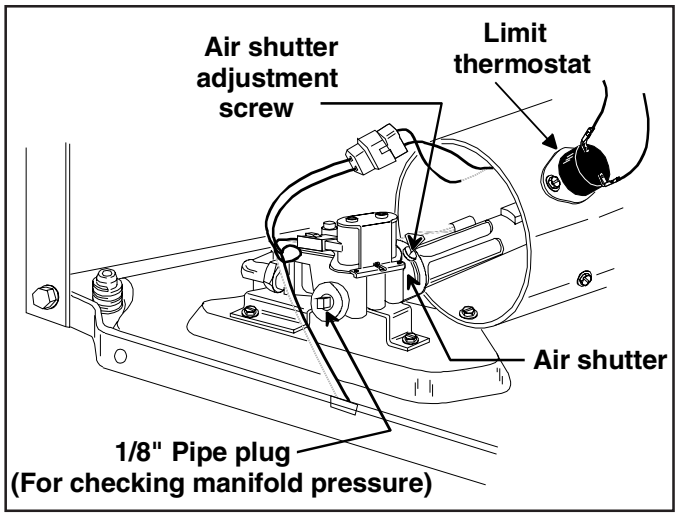

5. Reverse procedure to reassemble.

Heating Element (Electric Models)

1. Disconnect power supply to unit.
2. Remove service access panel, see “Service Access Panel” procedure.
3. Remove screws securing heating element to heater box.
4. Pull downward on heating element to remove from heater box.
5. Disconnect and label wire terminals to element and components.
6. Remove screws securing components to heating element, and transfer components to new heating element.

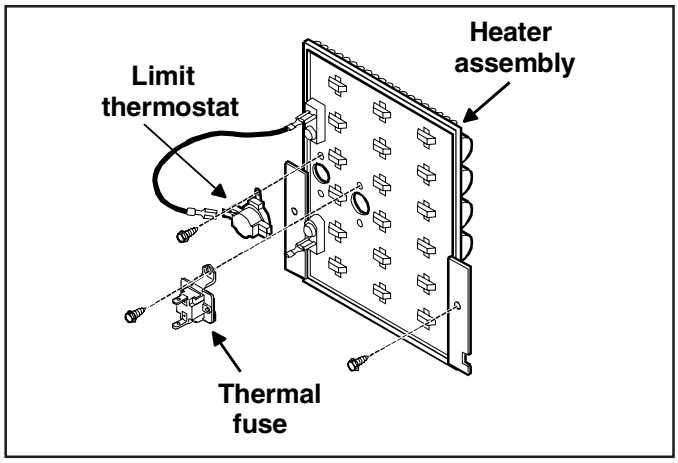

7. Reverse procedure to reassemble.

NOTE: Verify wire terminals are tightly connected to heating element and components.

©2004 Maytag Services

Disassembly Procedures

⚠ WARNING

To avoid risk of electrical shock, personal injury, or death, disconnect power and shut-off gas supply valve to unit before servicing.

Limit Thermostat and Thermal Fuse (Electric Models)

1. Disconnect power supply to unit.
2. Remove heating element, see “Heating Element (Electric Models)” procedure.
3. Reverse procedure to reassemble.

Cabinet

1. Disconnect power supply to unit.
2. Remove control hood assembly, see “Control Hood Assembly” procedure.
3. Remove front panel, see “Front Panel” procedure steps 1 – 3.
4. Remove screws securing cabinet top to side panels.
5. Raise cabinet top to a vertical position.
6. Carefully disconnect wire harness and feed harness through cabinet top access hole.
7. Disengage belt from motor and idler pulleys.
8. Remove front bulkhead, see “Front Bulkhead” procedure.
9. Carefully remove cylinder out through front of dryer.

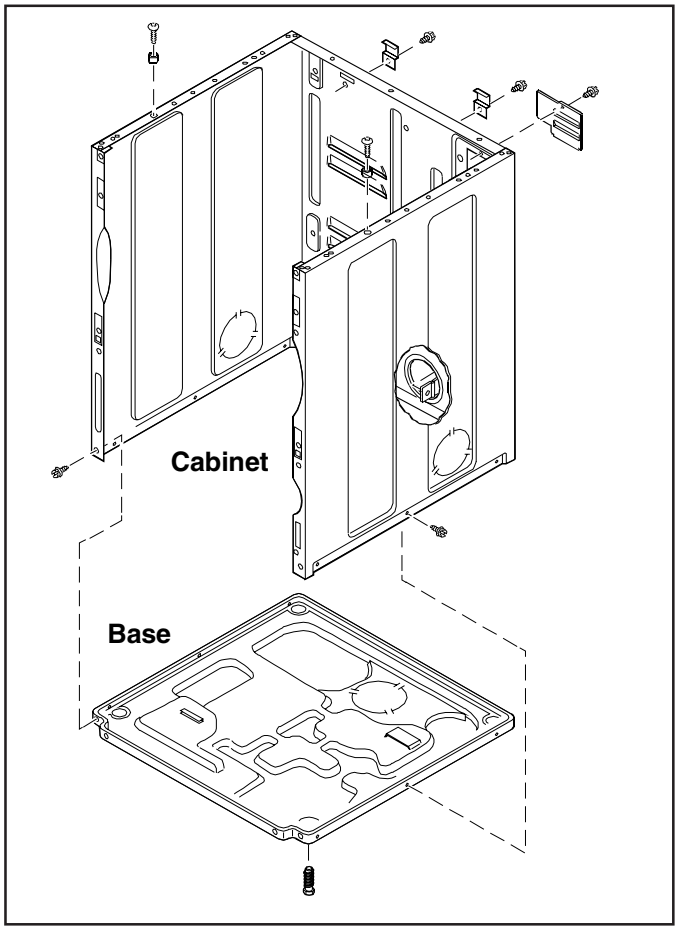

Gas Models

1. Remove burner tube attaching screw from right side of burner housing.
2. Gently move burner tube toward rear of dryer to disengage tab from slot on left side of burner housing.
3. Remove screw securing front of burner housing to dryer base and move housing away from heat shroud.
4. Remove screw securing burner housing to heat shroud.
5. While supporting rear bulkhead, remove screws securing rear bulkhead to dryer cabinet back, then lift complete assembly out of dryer.
6. Remove screws securing each rear cabinet top hold-down brackets.
7. Remove wire harness clips.
8. Remove locators and screws.
9. Remove screws from front edge at each side of cabinet. Then remove remaining screws from around bottom of cabinet and lift cabinet off base.
10. Reverse procedure to reassemble.

Electric Models

1. Remove two screws securing element and plate to heater box, then pull element down and away from heater box.
2. Remove screw securing heat shield to dryer base.
3. While supporting bulkhead, remove screws holding bulkhead to rear of dryer cabinet, and remove assembly out of dryer.
4. Remove screw securing exhaust duct to dryer cabinet and pull duct out of cabinet.
5. Remove screws from each rear cabinet top hold-down bracket.
6. Remove screw securing access plate and remove plate.
7. Remove wire harness clips.
8. Remove locators and screws.
9. Remove screws from front edge at each side of cabinet. Then remove remaining screws from around bottom of cabinet and lift cabinet off base.

Disassembly Procedures

⚠ WARNING

To avoid risk of electrical shock, personal injury, or death, disconnect power and shut-off gas supply valve to unit before servicing.

Base

1. Disconnect power supply and shut-off gas supply to unit.
2. Remove front panel, see “Front Panel” procedure steps 1 – 3.
3. Remove screws securing cabinet top to side panels.
4. Raise cabinet top to a vertical position.
5. Disengage belt from motor and idler pulleys.
6. Remove front bulkhead, see “Front Bulkhead” procedure.
7. Carefully remove cylinder out through front of dryer.

Gas Models

A. Disconnect igniter wires at disconnect blocks, sensor wires from flame sensor terminals, and wires from gas valve coils at the quick disconnect blocks.
B. Disconnect gas supply line to dryer.
C. Remove screws securing gas valve bracket to base and remove valve with attached lead-in pipe.
D. Remove screw securing burner tube in place from right side of burner housing.
E. Gently move burner tube toward rear of dryer to disengage tab from slot on left side of burner housing.

NOTE: The igniter is very fragile. Be careful not to damage it during removal.

F. Remove screw securing front of burner housing to dryer base.
G. Remove screws securing shroud to heater box and remove shroud and burner housing out through front of dryer.

Electric Models

A. Remove screws securing element and plate to heater box, then pull element down and away from heater box.
B. Disconnect wire harness from limit thermostat, thermal fuse and/or heating element.
C. Remove lint filter.
D. Remove screws securing air duct to front bulkhead and remove air duct.

NOTE: When reassembling, be sure seal on exhaust fan cover makes airtight seal on flange of duct. If the seal is installed improperly, the airflow through the exhaust system will be restricted which can adversely affect dryer performance.

E. Disconnect wires from thermostat and heater.

NOTE: Refer to appropriate wiring diagram when rewiring thermostat and heater.

Base Removal Gas and Electric Models (continued)

8. Remove screws securing motor mounting bracket to dryer base. Pull complete assembly forward to disengage mounting bracket and exhaust assembly.
9. Disconnect wires from motor switch and remove harness clip from motor bracket. Set motor and exhaust assembly off to the side.
10. Remove screw securing bracket on exhaust duct to rear of cabinet and remove duct from cabinet.

NOTE: When reinstalling motor and exhaust assembly, be sure wire harness on right side is clipped to motor mounting bracket and is routed along dryer base (between motor mounting bracket and right side of cabinet). Tab on rear of motor mounting bracket must be inserted into slot in dryer base. Be sure the belt has been installed on the correct side of the idler lever.

11. Remove screws from front edge at each side of cabinet. Remove remaining screws from around bottom of cabinet and lift cabinet off base.
12. Remove leveling legs from base.
13. Reverse procedure to reassemble.

Thermistor or Thermostat and Heater

1. While supporting the lower access panel, remove two screws from bottom edge of lower access panel.
2. Gently lower the access panel to disengage locators from bottom edge of front panel.
3. Disconnect wires and remove thermostat attaching screws, thermostat and heater.

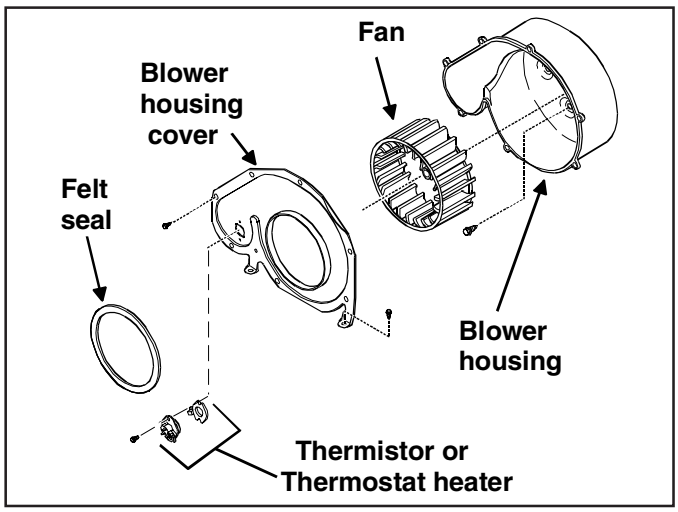

 ©2004 Maytag Services

Disassembly Procedures

⚠ WARNING

To avoid risk of electrical shock, personal injury, or death, disconnect power and shut-off gas supply valve to unit before servicing.

Motor and Exhaust Assembly

1. Disconnect power supply and shut-off gas supply to unit (if so equipped).
2. Remove front panel, see “Front Panel” procedure steps 1 – 3.
3. Remove screws securing cabinet top to side panels.
4. Raise cabinet top to a vertical position.
5. Disengage belt from motor and idler pulleys.
6. Remove front bulkhead, see “Front Bulkhead” procedure.
7. Carefully remove cylinder out through front of dryer.
8. Disconnect wires from thermostat/thermistor and heater.

NOTE: Refer to appropriate wiring diagram when rewiring thermostat and heater.

9. Disengage motor wire harness terminal block from motor switch by pressing in on the movable locking tabs (located on each end of the terminal block) and pulling away from motor.
10. Remove screws securing motor mounting bracket to dryer base.

NOTE: When reassembling, be sure seal on exhaust fan cover makes airtight seal on flange of duct. If the seal is installed improperly, the airflow through the exhaust system will be restricted which can adversely affect dryer performance.

NOTE: When reinstalling motor and exhaust assembly, be sure wire harness on right side is clipped to motor mounting bracket and is routed along dryer base (between motor mounting bracket and right side of cabinet). Tab on rear of motor mounting bracket must be inserted into slot in dryer base. Be sure the belt has been installed on the correct side of the idler lever.

Idler Pulley

NOTE: When repairing or replacing the idler arm, it is important to verify idler arm moves freely.

1. Unhook idler spring.
2. Lift idler arm approximately 3 inches and release. If idler arm does not fall back to the base of the motor mount, then idler arm bolt is too tight.
3. Loosen idler arm bolt 1/4 turn if too tight.
4. Add grease between idler arm and motor mount.

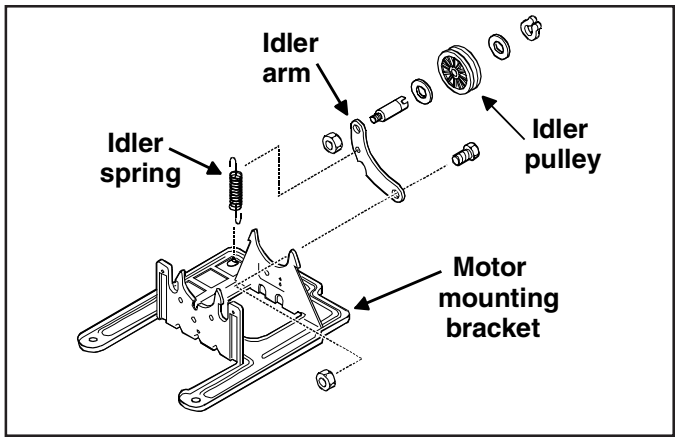

Impeller and Housing

1. Remove screws securing cover to housing.
2. Hold motor pulley securely and unthread impeller from motor shaft (right hand thread). Use a 7/8 inch, 6 point socket to aid in the removal of the impeller.
3. Remove screws securing the exhaust housing to the motor mounting bracket.

Motor

1. Disengage motor wire harness terminal block from the motor by pressing in on the movable locking tabs (located on each side of the terminal block) and pulling away from motor.

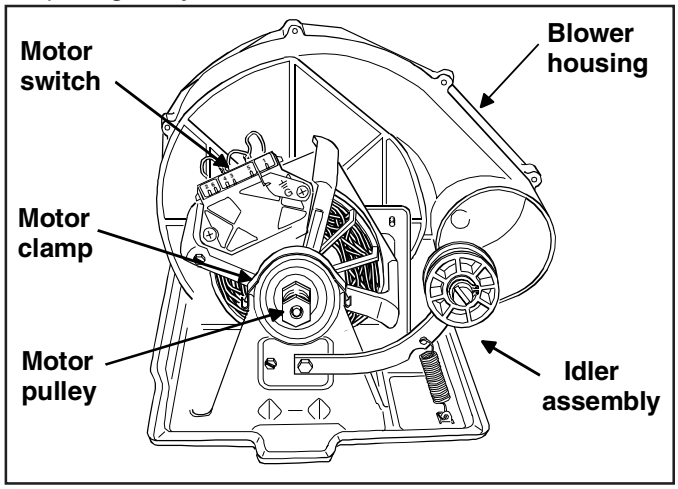

NOTE: To avoid an open circuit, DO NOT pull on the terminal block wires when removing blocks from motor as this could damage the wires or terminal crimping.

Before attaching wire harness terminal block to motor, be sure all the male terminals on motor are straight and are capable of accepting the terminals from the wire harness terminal block.

⚠ WARNING

To avoid risk of electrical shock, personal injury, or death, disconnect power and shut-off gas supply valve to unit before servicing.

2. Disconnect ground wire from motor.
3. Pry two motor clamps off motor mounting bracket with screwdriver. Then lift motor out of mounting bracket.

NOTE: When replacing motor, motor switch should be at 10 o'clock position. The positioning tab on the motor should be engaged with the anti-rotating notch in the motor bracket.

Terminal Block

1. Disconnect power supply to unit.
2. While supporting the lower access panel, remove two screws from bottom edge of lower access panel.
3. Gently lower the access panel to disengage locators from bottom edge of front panel.
4. Remove two screws holding bottom tabs on front panel to dryer side panels. Swing bottom of front panel away from dryer far enough to disengage hold-down clips and locators from cabinet top.
5. Disconnect wires from door switch.

NOTE: Refer to appropriate wiring diagram when rewiring switch.

6. Remove two cabinet hold-down screws. Lift cabinet top to a vertical position by hinging it on the rear hold-down brackets.

NOTE: When servicing, cabinet top may be raised and hinged on the rear hold-down brackets, or supported against wall behind the dryer.

7. Remove all wires from terminal block. (Refer to appropriate wiring diagram when rewiring terminal block).
8. Remove screw holding terminal block to rear bulkhead.

Terminal Block Terminals

- Disconnect power supply to unit.

Remove terminals from the plastic connector block using No. 283P4 Terminal Extractor Tool as follows:

- Insert the tool into the plastic connector block on the back of the terminal being removed.
- Apply tool pressure to compress the terminal locking tab on terminal and force the terminal out back side of plastic connector block.

To install terminal in plastic connector block, insert terminal (with wire securely crimped in place) into back side of plastic connector block. Push terminal into plastic connector block until locking tab on terminal spreads and holds terminal in place.

Power Cord

1. Disconnect power supply to unit.
2. Remove access plate on rear of cabinet.
3. Remove strain relief.
4. Remove screw holding power cord ground wire to rear bulkhead.
5. Disconnect molex plug and remove power cord from rear of dryer cabinet.

NOTE: Reinstall screw and ground wires into same hole in bulkhead when reinstalling power cord.

NOTE: A qualified electrician should check the polarity of the wall receptacle.

 ©2004 Maytag Services

Appendix A

Amana®
BUILT BETTER THAN IT HAS TO BE™

Owner's Manual

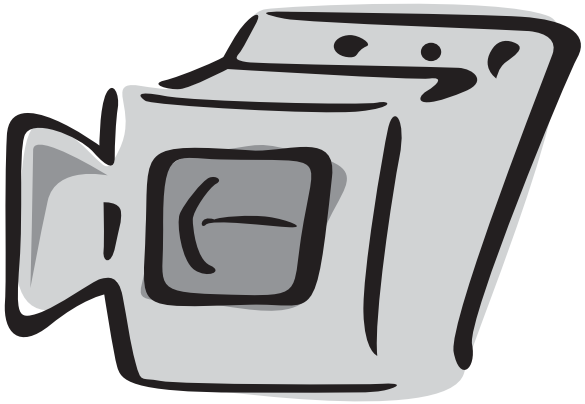

Contents

Important Safety Information 3
Drying Clothes 4
Features, Hints, and Care 6
Reversing the Door 7
Drying Guide 8
Trouble Shooting 10
Amana Dryer Warranty 12

Gas and Electric Dryer

Keep instructions for future reference. Be sure manual stays with dryer.

Thank you for buying an Amana dryer!

Please take the time to complete the registration card and return promptly. If registration card is missing, call Amana Consumer Affairs Department. When contacting Amana, provide product information from serial plate found on upper right hand corner of door opening:

Serial Plate

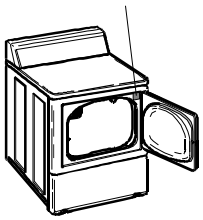

Model Number _____
Manufacturing (P) Number _____
Serial Number (S/N) _____
Purchase Date _____
Dealer Name _____
Dealer Address _____
Dealer Phone _____

Keep this manual and your sales receipt together in a safe place for future reference or if warranty service is required.

For answers to questions or to locate an authorized servicer, call 1-800-NAT-LSVC (1-800-628-5782) inside USA or 319-622-5511 outside USA. Warranty service must be performed by an authorized servicer. Amana Appliances also recommends contacting an authorized servicer if service is required after warranty expires.

For more information on this and other Amana products, visit our Web site

www.amana.com

or

call Consumer Affairs Department at

1-800-843-0304

Asure™ Extended Service Plan

Amana Appliances offers long-term service protection for this new dryer. Asure™ Extended Service Plan, covering functional parts, labor, and travel charges, is specially designed to supplement a strong warranty. Call 1-800-528-2682 for information.

Parts and Accessories

Purchase replacement parts and additional accessories by phone. To order accessories for your Amana product, call 1-800-843-0304 inside USA or 319-622-5511 outside USA.

Save Time and Money

If something seems unusual, please check "Trouble Shooting" section, which is designed to help you solve problems before calling service. If you have a question, write or call us (include model number and phone number) at:

Consumer Affairs Department
Amana Appliances
2800 - 220th Trail
Amana, Iowa 52204

Ph# 1-800-843-0304

What You Need to Know about Safety Instructions

Warning and Important Safety Instructions appearing in this manual are not meant to cover all possible conditions and situations that may occur. Common sense, caution, and care must be exercised when installing, maintaining, or operating dryer.

Always contact your dealer, distributor, service agent, or manufacturer about problems or conditions you do not understand.

Recognize Safety Symbols, Words, Labels

⚠ DANGER

DANGER—Immediate hazards which **WILL** result in severe personal injury or death.

⚠ WARNING

WARNING—Hazards or unsafe practices which **COULD** result in severe personal injury or death.

⚠ CAUTION

CAUTION—Hazards or unsafe practices which **COULD** result in minor personal injury or product or property damage.

Important Safety Information

⚠ WARNING

To reduce risk of fire, electric shock, serious injury, or death when using your dryer, follow these basic precautions:

1. Read all instructions before using dryer.
2. Install dryer according to Installation Instructions. Refer to the Grounding Instructions in the Installation Instructions for proper grounding of the dryer.
3. Do not dry articles that have been cleaned in, washed in, soaked in, or spotted with gasoline, dry-cleaning solvents, or other flammable or explosive substances. Vapors could ignite or explode.
4. Do not use dryer to dry clothes which have traces of any flammable substance, such as vegetable oil, cooking oil, machine oil, flammable chemicals, thinner, etc., or anything containing wax or chemicals, such as mops and cleaning cloths. Flammable substances may cause fabric to catch fire by itself.
5. Do not store or use gasoline or other flammable vapors and liquids near this or any other appliance.
6. Do not allow children to play on or in dryer. Close supervision of children is necessary when dryer is used near children, a safety rule for all appliances.
7. Before dryer is removed from service or discarded, remove door to drying compartment.
8. Do not reach into dryer if cylinder is revolving.
9. Do not install or store dryer where it will be exposed to water and/or weather.
10. Do not tamper with dryer controls.
11. Do not repair or replace any part of dryer or attempt any service, unless specifically recommended in user-maintenance instructions or in published user-repair instructions that you understand and have skills to carry out.
12. To reduce risk of electric shock or fire, do not use extension cords or adapters to connect dryer to electrical power source.
13. Use the dryer only for its intended purpose, drying clothes.
14. Always disconnect dryer from electrical supply before attempting any service. Disconnect power cord by grasping the plug, not the cord.
15. Do not use heat to dry articles containing foam rubber or similarly textured rubberlike materials.
16. Always clean the lint filter after every load. A layer of lint in the filter reduces drying efficiency and prolongs drying time.
17. Use only fabric softeners or products to eliminate static that are appropriate for automatic dryers.
18. Keep your dryer in good condition. Bumping or dropping dryer can damage safety features. If damage occurs, have dryer checked by qualified service technician.
19. Replace worn power cords and/or loose plugs.
20. Do not tumble fiberglass curtains and draperies unless the label says it can be done. If they are dried, wipe out the cylinder with a damp cloth to remove particles of fiberglass.
21. Always read and follow manufacturer's instructions on packages of laundry aids. Heed all warnings or precautions. To reduce risk of poisoning or chemical burns, keep products away from children at all times, preferably, in a locked cabinet.
22. Never operate dryer with guards and/or panels removed.
23. Do not operate dryer with missing or broken parts.
24. Do not bypass safety devices.
25. Keep area around the exhaust opening and adjacent surrounding areas free from accumulation of lint, dust, and dirt.
26. Interior of dryer and exhaust duct should be cleaned periodically by qualified service personnel.
27. Dryer will not operate with loading door open. DO NOT bypass door safety switch by permitting dryer to operate with door open. Dryer will stop tumbling when door is opened. Do not use dryer if it does not stop tumbling when door is opened or starts tumbling without pressing or turning the START mechanism. Remove the dryer from use and call the service person.
28. Remove laundry immediately after the dryer stops.
29. ALWAYS follow the fabric care instructions supplied by the garment manufacturer.

Save These Instructions

Drying Clothes

If These Controls are Different from Yours

These controls are intended to show the variety of features that are available in the product line. If your dryer does not have all the options that are shown, it is not a mistake. The information provided applies to several of the models in the product line.

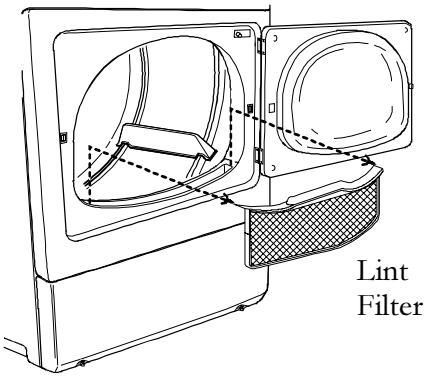

IMPORTANT: Lint filter must be in place in door opening when using dryer or loading and unloading dryer. If filter is not in place, clothing could fall into front air duct.

1. Sort clothes for drying

Properly dried clothes will need a minimum of care when removed from the dryer. Clothes properly sorted for washing should be properly sorted for drying also. Follow the examples below.

SORT	EXAMPLES
Dark and Light Colors	Separate light clothes from dark clothes.
Lint Shedding Fabrics	Towels, flannels, chenille, cottons, rugs
Lint Receiving Fabrics	Corduroys, knits (including socks), permanent press, and synthetics
Heavy and Light weight Fabrics	Lightweight fabrics dry faster than heavyweight fabrics. If mixed loads are dried together (such as sheets and towels), remove the lighter weight fabrics when they are dry to prevent over drying and wrinkling.

2. Clean the lint filter before each use

A **clean lint filter** ensures efficient drying and clothes will remain lint-free when unloading dryer. A layer of lint on the screen will reduce air flow through the dryer and lengthen drying time. Lint screen may be washed if needed.

- Lint filter is located at front of the dryer in the lower part of door opening.
- Replace lint filter in door recess and push in firmly. Words on filter should face front of dryer.

Add clothes loosely into dryer drum. Add fabric softener sheet, if desired. **Close loading door**. Dryer will not operate with the door open.

3. Select FABRIC SELECTOR setting

Set FABRIC SELECTOR knob to most appropriate temperature for type of fabric in load. Follow garment manufacturer's care label for recommended temperature settings. See chart below.

FABRIC SELECTOR

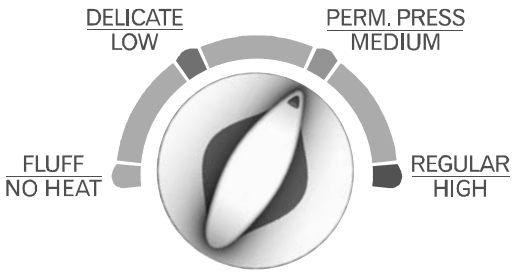

FABRIC SELECTOR	CYCLE
Regular/High Approximately 160ºF	**Automatic Regular** Use for sturdy items like play or work clothes.
Perm. Press Regular/ Med. High (some models) Approximately 155ºF	**Automatic Regular/Perm** Use for sturdy items like play or work clothes, permanent press items, and synthetics.
Perm. Press/Medium Approximately 150ºF	**Automatic Permanent Press/Knits** Use for permanent press and synthetic items.
Delicate/Low Approximately 129ºF	**Automatic Delicate** Use for delicate items.
Fluff/No Heat No heat	**Any Cycle**
Time Dry cycle can be used with all Fabric Selector settings.	

4. Select SIGNAL volume (some models)

If a volume level is selected, the signal will let you know when the cycle is done. Signal will stop when the door is opened, or when the timer is advanced to an OFF position.

5. Select EXTENDED TUMBLE, if desired (some models)

On Automatic cycles only, EXTENDED TUMBLE cycle helps to reduce wrinkling after the normal drying cycle. After COOL DOWN portion of the cycle, it continues to tumble clothes without heat for 40 minutes, until the dryer door is opened, or the switch is turned to the OFF position.

6. Turn timer to desired setting

The cycles control the drying time. The ENERGY SAVER setting, marked with a dash (–), shows which dryer settings will use the least energy and will leave items damp for easier ironing.

The **AUTOMATIC cycles** will automatically determine the time needed to dry your clothes and will work on any FABRIC SELECTOR setting. Set the timer for the type of fabric in the load.

TIME DRY cycle will operate dryer for up to 75 minutes. Cottons and heavyweight items dry best between 50 and 75 minutes, lightweight items dry best between 20 and 40 minutes.

AUTOMATIC WRINKLE OUT cycle (some models) helps remove wrinkles from slightly wrinkled items that may have been sitting in a dryer or laundry basket overnight. The cycle has a short heat setting followed by a 5 minute COOL DOWN.

7. Push in timer knob to start

To stop dryer at any time, open door or turn timer knob to the OFF position. To restart dryer, close door, reset timer if necessary, and push in the timer knob.

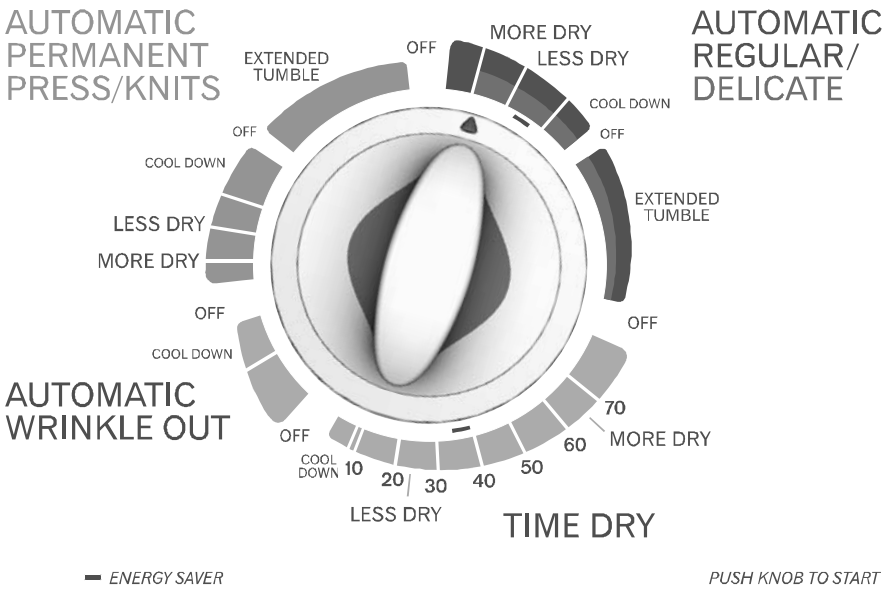

Features, Hints, and Care

Follow the Colors

Your dryer control panel is color coordinated for your convenience. When you set your controls, notice which colors are the same. They will help guide you through setting the controls.

Drying Times

It is impossible to give exact drying times. Conditions from home to home vary and directly affect drying times. The length of time it takes to dry loads will depend on several variables.

- Load size
- Type of fabric, washer, and spin speed will determine moisture in the fabric.
- Heat and moisture in the room. Damp air coming into the dryer will increase drying time.
- Installation (length of exhaust duct, etc.).
- Electric voltage or gas pressure.

If you have an automatic cycle, you need not worry about time. The automatic cycle will determine the time needed. Set the timer for the type of fabric in the load. See the operating instructions provided with your dryer. Do not set the timer for a "higher" setting than necessary. If you have a permanent press, knit cycle, use it for loads of permanent press, knits and for clothes made from or containing synthetic fibers. This cycle has a longer COOL DOWN period at the end of the cycle to reduce wrinkling.

How to Remove Ball Point Pen Ink Marks from the Dryer Drum

If the ink stain is fresh, place dry rags in the dryer. Using the hottest heat setting, run the dryer for one hour to absorb the ink.

If the stain is not fresh, apply household spray or cream cleaner to a soft cloth, and rub the stain. Then, place wet rags in the dryer. Using the hottest heat setting, run the dryer for one hour to remove any cleaner residue.

Optional Drying Rack (some models)

Drying Rack, Part No. 504105, is useful for drying items that require no-tumble drying, such as tennis shoes, sweaters, stuffed toys or other delicate items.

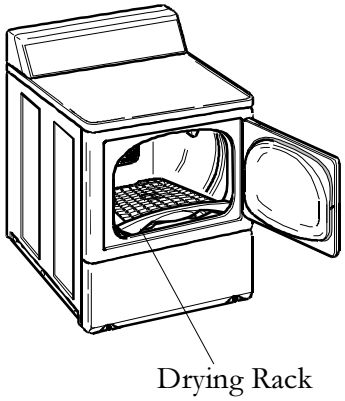

General Dryer Care

Cleaning

- Ordinarily, dryer cylinder will need no care.
- Wipe dryer cabinet as needed. If detergent, bleach or other washing products have been spilled on the dryer, wipe immediately. Some products will cause permanent damage if spilled on the cabinet.
- Do not allow sharp or rough objects to lean against the dryer. The finish could be damaged.
- Use only a damp or sudsy cloth for cleaning the control panel. Some spray prewash products may harm the finish on the control panel.

Lint Filter

Clean lint filter after drying each load. A clean lint filter ensures efficient drying and clothes will remain lint-free when unloading dryer. A layer of lint on the screen will reduce air flow through the dryer and lengthen drying time. Lint screen may be washed with soap and water if needed.

Lubrication

All moving parts are sealed in a permanent supply of lubricant or are equipped with oilless bearings. Additional lubrication will not be necessary.

Exhaust System

- The exhaust duct should be inspected after one year of use and cleaned if necessary. Inspect and clean exhaust duct every one to two years as required thereafter.
- The weather hood should be checked frequently to make sure the dampers move freely, dampers are not pushed in and that nothing has been set against them.
- Keep dryer area clear and free from combustible materials, gasoline and other flammable vapors and liquids.
- Do not obstruct the flow of combustion (gas dryers) and ventilation air.

Reversing the Door

To reverse doors perform the following steps:

1. Remove four hinge attaching screws.
2. Remove all 9 screws from door and hinges.
3. Pull bottom of door liner out (A), then pull down (B), removing door liner from door panel.
4. Rotate door panel 180° as shown.
5. Remove door strike from door liner and reinstall on opposite side.
6. Insert liner under flange on bottom of door (A), then push top of door liner into place (B)
7. Reinstall 9 screws removed in Step 2.
8. Using a screwdriver, remove two door plugs and reinstall on opposite side of door opening.
9. Reinstall four hinge attaching screws removed in Step 1.

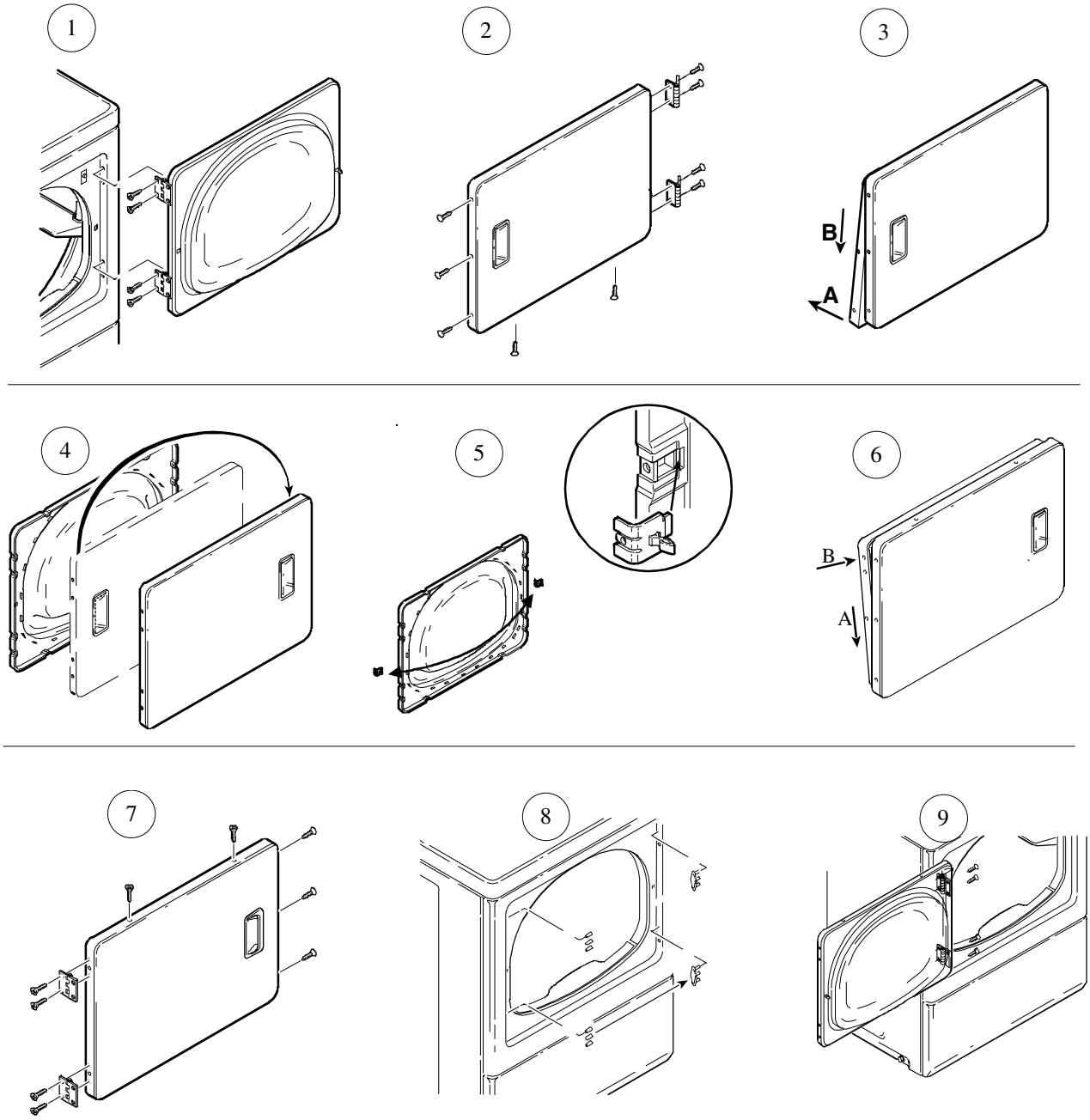

Drying Guide

Item		Special Instructions
Bedspreads		Choose heat for the type fabric used. Dry one double or two single spreads at once. Chenille and tufted spreads will shed lint and should be dried alone. New spreads will contain loose lint. Tumble new spreads on NO HEAT setting before washing to remove loose lint. These spreads may be dried completely.
Blankets	Electric	DELICATE or NO HEAT cycles. If the manufacturer recommends drying the blanket in the dryer, follow the “Wool” instructions below. Do not stretch the blanket because of the wiring. Some electric blankets may have insulation on the thermostats or on the wiring which will not withstand dryer heat. Do not dry in dryer unless the blanket manufacturer says it can be done.
	Synthetic Fibers	DELICATE or NO HEAT cycles. Some of these blankets are fluffy and will shed lint. Tumble on NO HEAT setting before washing to remove loose lint. Use a gentle wash method, then dry in dryer until just dry. The lint filter may need to be cleaned during the drying.
	Thermal Cotton	AUTOMATIC REGULAR cycle.
	Wool	Agitation and tumbling contribute to the shrinkage and felting of wool. We cannot guarantee that wool will not shrink. However, if care is taken and the blanket manufacturer’s instructions are followed, satisfactory results should be obtained. Wash by the soak method with as little agitation as possible. After washing, stretch blanket gently in both directions. Use approximately five dry bath towels and place them between folds in blanket. This will "cushion” it to lessen the tumbling. Set dryer for 20 minutes on the TIME DRY cycle. Use REGULAR heat setting, if it is available on your dryer. Check blanket when timer reaches 10. Wool blankets must be removed from the dryer when damp. Stretch gently to shape and finish drying over two clotheslines or in a flat position.
Quilts		Choose heat and cycle for fabric. Filling and cover must be completely washable. Old quilts may be too fragile to machine wash or dry. Quilts filled with cotton may become lumpy. Quilting should be close together. Remove from dryer slightly damp and stretch gently to shape. Quilted articles may shrink if over dried.
Mattress Pads		Material in mattress pads is made of either cotton or synthetic fibers. Read fiber content label, found on your mattress pad, to determine what type of fiber was used to manufacture the pad. READ AND CAREFULLY FOLLOW the fabric care instructions supplied by the mattress pad manufacturer. Some pads made of synthetic fibers are very heat sensitive. These pads can be flammable if over-heated or over-dried. TO AVOID A FIRE HAZARD, DO NOT OVER-DRY mattress pads. Remove pads from the dryer while they are still damp.
Slip Covers		Choose heat for fabric. Close zippers. Dry one couch cover, two chair covers or five or six pillow covers at one time. Remove from dryer when slightly damp. Press pleats if necessary and replace on furniture immediately. Stretch fabrics and knits should be dried completely so they will fit snugly when replaced on furniture.
Pillows	Feather and Down-Filled	Ticking must be strong and seams secure. If in doubt, sew pillow into a case or use a zippered pillowcase to prevent feathers from coming out. After washing, shake pillow to fluff feathers. Dry one large or two smaller pillows. Use TIME DRY cycle. Use LOW or MEDIUM heat setting if it is available on you dryer. Shake and reposition pillows several times during drying. Pillows must be dry in the center to prevent mildew. Drying may take two hours or longer. Reset dryer timer if necessary. The odor of wet feathers is not pleasant. However, the odor will disappear once the pillows dry.
	Fiber-Filled (polyester)	Follow manufacturer’s directions.
	Foam Rubber	Do not dry in the dryer.
Curtains	Cotton	AUTOMATIC REGULAR or TIME DRY cycles. Remove damp items for ironing or dry completely, then steam iron.
	Fiberglass	DO NOT DRY IN THE DRYER unless recommended by the manufacturer. Fiberglass may shred. Particles may remain in the dryer and rub off on the next load. This could irritate the skin. “Beta” fiberglass may be dried in the dryer if recommended by the manufacturer.
	Synthetic Fibers	DELICATE or NO HEAT cycles. Allow room for tumbling to prevent wrinkling. Delicate or sheer curtains must be dried by themselves so they will not be snagged by hooks or crushed by other clothes in the load. Some sheer curtains are heat sensitive. Dry 10 minutes only, plus the cool down period. Remove from dryer immediately and hang. If the dryer has been heated from a previous load, NO HEAT setting may be sufficient.
Draperies		Remove hooks and weights before washing. Choose heat for fabric and allow space in the dryer for tumbling. Some draperies may be removed when slightly damp and hung immediately. Lined draperies should be dry-cleaned because they have a tendency to pucker.

Item		Special Instructions
Knit articles	All Knits	Knit fabrics are usually manufactured under tension (stretching). Cotton knits especially may relax or draw together if every bit of moisture is removed form them. It is best to take them out of the dryer with a trace of moisture remaining, then stretch to shape. If they do shrink from overdrying, rewet them and dry properly.
	Cottons	AUTOMATIC REGULAR or TIME DRY cycle. Remove slightly damp to minimize ironing. Reshape, smooth seams and pockets, etc.
	Synthetic Fibers (nylon, orlon, polyester etc.)	AUTOMATIC REGULAR or AUTOMATIC PERMANENT PRESS cycle. Turn inside out to prevent “pilling” (rolling up of the fiber ends from friction). Dry sweaters only with similar things because they tend to attract lint. Make sure the load is large enough for tumbling. Dry completely and remove from dryer immediately to minimize wrinkling.
	Wool	DELICATE or NO HEAT cycle. For wool labeled “machine washable” follow manufacturer’s directions. For other wool, use wool blanket method. Do not dryer loosely knit wool or hand knits. Dry these flat and stretch to shape from a pattern drawn before washing.
Lingerie	Cotton	AUTOMATIC REGULAR cycle.
	Elastic	Body oils can cause elastic to deteriorate. Wash garments containing elastic frequently. Elastic in such things as shorts may be dried, however avoid overdrying.
	Foam Rubber	Bras, bathing suits, sun suits, etc, DO NOT DRY THESE ITEMS IN THE DRYER WITH HEAT, FIRE MAY RESULT. NO HEAT setting may be used.
	Stretch Fabrics	Choose heat for the most delicate fiber. These may be dried completely as they will stretch into shape. Avoid drying with lint-shedding fabrics.
	Synthetic Fibers	TIME DRY cycle. Use a DELICATE or LOW HEAT setting, if it is available on dryer. Some sheer fabrics, especially sheer knits, can be heat sensitive. Dry these until they are just dry (about 10 minutes) and remove from dryer immediately. Sheer fabrics should not be washed and dried with garments containing hooks or zippers. Synthetic fabrics will create static electricity if overdried. TO prevent this use fabric softener and avoid overdrying.
Denim, Corduroy		AUTOMATIC REGULAR cycle. Dry completely and remove from dryer when seams are slightly wet to minimize shrinkage.
Rugs	Cotton with Cotton Backing	AUTOMATIC REGULAR or TIME DRY cycles. Dry one large or several small rugs. For one small rug only, add towels for buffers.
	Rubber-backed	Hot water and heat tend to deteriorate many types of rubber. Some types of rubber-like materials are flammable under certain conditions. DO NOT DRY FOAM RUBBER AND RUBBER-LIKE MATERIALS WITH HEAT.
	Synthetic Fibers	DELICATE or NO HEAT cycles. Follow manufacturer’s suggestions. Some of these rugs are heat sensitive and should be removed from the dryer when damp or dried with no heat.
Stuffed Animals and Toys		Make sure the filling and covering is washable and can be dried in the dryer. Cotton filling may become lumpy. Protect glass eyes by covering with a stocking or tie toy into a pillowcase. Choose heat for most sensitive fiber. Dry enough clothes in the load for good tumbling. DO NOT DRY TOYS STUFFED WITH FOAM RUBBER OR KAPOK IN THE DRYER WITH HEAT.
Tennis Shoes		DELICATE or NO HEAT cycle. Use a drying rack or tumble with at least four old bath towels.

Trouble Shooting

You may save time and money by checking items below before calling for service. List includes common concerns that are not the result of defective workmanship or materials. If your question is not explained below, contact Amana Consumer Affairs Department at **800-843-0304.**

TOPIC	POSSIBLE CAUSE	SOLUTION
NOISE		
Vibrating noise	Dryer may not be resting firmly on floor	Some vibration is normal. Adjust leveling legs so dryer rests firmly on floor. See *Installation Instructions* for leveling details.
Thumping, rattling, or clanking noise	Loose objects, such as coins or pins	Stop dryer and check for loose objects. Remove loose objects if possible.
	Belt buckles, metal fasteners hitting drum	Close zippers, buttons, and fasteners. Clothing with buckles should be turned inside out.
Whirling sound	As air moves through the dry, a whirling sound may be noticed	Normal
Pulsating sound	When the drum rotates, it may create a pulsating sound	Normal
Clicking sound	Many of the parts, such as the timer, click as they operate	Normal
OPERATION		
Dryer does not run	Electrical power cord may not be plugged in, or connection may be loose	Make sure plug from power cord fits tightly into wall outlet.
	Fuse blown, circuit breaker tripped, or power outage occurred	Replace fuse or reset circuit breaker. Do NOT increase fuse capacity. Call qualified electrician to correct circuit overload problem. Call local utility company to correct power outage.
	Dryer door is not closed	Push door closed.
	Timer knob must be pushed in to restart dryer	If dryer door was opened during a cycle, the timer knob must be pushed in to restart the cycle.
Dryer does not heat	Dryer set to FLUFF/NO HEAT setting	Reset FABRIC SELECTOR knob.
	Damper on weather hood is stuck closed or frozen	Severely restricted airflow will cause dryer to stop heating. Check weather hood and exhaust system for restrictions.
	Gas supply is shut off (Gas Dryers Only)	Check other gas appliances in house for gas supply.
Dryer drum becomes stained	Fabric dyes that are not set can stain the dryer drum	Make a paste from powdered detergent and rub on stain. Though you may not be able remove stain immediately, the stain may fade and disappear over time.

TOPIC	POSSIBLE CAUSE	SOLUTION
Drying		
Long drying times	Improper exhaust system	Check Installation Instructions for length of proper exhaust system. Only use 4” diameter rigid or semi-rigid duct. Restricted airflow will cause dryer to stop heating. Check weather hood and exhaust system for restrictions.
	Overloading	Dry one wash load at a time.
	Sorting	Separate heavy items from lightweight items.
	Full lint filter	Clean lint filter before each use.
	Clothes too wet from washer	Check that the washer had enough spin speed to extract water. Clothes may need to be rearranged in the washer and put through an additional spin cycle to extract enough water before drying.
Lint	Full lint filter	Clean lint filter before each use.
	Improper sorting	Separate lint producers (cotton towels) from lint attracters (synthetic fabrics).
	Paper, tissues, or other items left in pockets	Remove items from pockets before washing or drying.
	Overloading	Overloading reduces airflow so lint is not collected in filter. Dry one wash load at a time.
Static	Overdrying	Adjust controls for shorter drying time. Use a fabric softener.
	No fabric softener was used	Use a fabric softener.
	Synthetic fabrics can cause static	Use a fabric softener.

Amana Dryer Warranty

Full ONE Year Warranty

For one (1) year from the date of original retail purchase, Amana will repair or replace any part that fails due to a defect in materials or workmanship.

Limited Warranty

After one year from the date of original retail purchase, Amana will provide a free part, as listed below, to replace any part that fails due to a defect in materials or workmanship. The owner will be responsible for paying all other costs including labor, mileage, and transportation.

Second through Third Year

Amana will provide any part.

Third through Fifth Year

Amana will provide the drive motor or timer.

Third through Tenth Year

Amana will provide the cabinet assembly should the part rust through.

Lifetime

Amana will provide the Stainless Steel inner drum if so equipped.

What is not covered by these warranties

- Replacement of household fuses, resetting of circuit breakers, or correction to household wiring or plumbing.
- Products with original serial numbers removed, altered, or not readily determined.
- Products purchased for commercial, industrial, rental, or leased use.
- Products located outside of the United States or Canada.
- Premium service charges, if the servicer is requested to perform service in addition to normal service or outside normal service hours or area.
- Adjustments after the first year.
- Damage to clothing.

Repairs resulting from the following:

- Improper installation, exhaust system, or maintenance.
- Any modification, alteration, or adjustment not authorized by Amana.
- Accident, misuse, abuse, fire, flood, or acts of nature.
- Connections to improper electrical current, voltage, or supply.

To Receive Warranty Service

Service must be performed by an authorized Amana service representative. To schedule service, contact the Amana dealer where you purchased your appliance or contact Amana Appliances Factory Service.

Amana Appliances Factory Service
1-800-628-5782 inside USA

For more information,
Amana Appliances Consumer Services
Amana Appliances
2800 220th Trial
Amana, Iowa 52204
1-800-843-0304 inside USA
(319) 622-5511 worldwide

When contacting Amana Appliances please include the following information:

- Your name, address, and telephone number.
- Model number and serial number of your appliance (found on inside of lid in the bottom right corner).
- The name and address of your dealer and the date of purchase.
- A clear description of the problem.
- Proof of purchase (sales receipt).

IN NO EVENT SHALL AMANA BE LIABLE FOR INCIDENTAL OR CONSEQUENTIAL DAMAGES.
This warranty gives you specific legal rights, and you may have others which vary from state to state. For example, some states do not allow the exclusion or limitation of incidental or consequential damages, so this exclusion may not apply to you.

***Amana Appliances Online* • http://www.amana.com**

Part No.40086001
Printed in U.S.A. 8/99

© 1999 Amana Appliances
Amana, Iowa 52204

16023020

This page intentionally left blank.