WEIL-McLAIN®

SlimFit®

Series 3

Models 550 and 750 MBH

Commercial Condensing

Gas-fired water boilers

Advanced Manual

Multiple boiler installation & settings + Single boiler advanced settings

WARNING This manual must only be used by a qualified heating installer/service technician. Read all instructions, including this manual and all other information shipped with the boiler, before installing. Perform steps in the order given. Failure to comply could result in severe personal injury, death or substantial property damage.

Part number 550-100-569/0321

Contents

SlimFit Control — Advanced mode 3

Multiple boiler installations 6

Fast-Track Setup — Requirements by Boiler 9

Fast-Track Setup — Steps 10

Fast-Track Setup — The WIZARD 11

Fast-Track Setup — Typical Application A. 14

Fast-Track Setup — Typical Application B. 16

Fast-Track Setup — Typical Application C. 18

Fast-Track Setup — Typical Application D. 20

Field wiring (see wiring diagram,) 22

Wiring diagram — schematic 32

Wiring diagram — ladder 34

Zoning with the SlimFit Control 36

SlimFit Control — INITIAL SCREENS 40

Control operation 41

Available control settings – Advance Mode 43

System Type presets 45

CONTRACTOR menus 46

BOILER SETTINGS menu 47

NETWORK SETTINGS menu 48

ROTATION AND SEQUENCE 49

Network Boiler PRIORITY menus. 52

Single Boiler PRIORITY menus 54

ASSIGN INPUTS menu 56

AUX PUMP/OUTPUT options 57

Additional heat demand. 58

MAINTENANCE, DATE AND TIME menus 59

WARNING Follow all instructions for installation, start-up and servicing in the **SlimFit boiler manual**.

Use this **Advanced Manual** for multiple boiler installation guidelines and control settings and for single boiler advanced control settings.

HAZARD DEFINITIONS

The following defined terms are used throughout this manual to bring attention to the presence of hazards of various risk levels or to important information concerning the life of the product.

DANGER Indicates presence of hazards that will cause severe personal injury, death or substantial property damage.

WARNING Indicates presence of hazards that can cause severe personal injury, death or substantial property damage.

CAUTION Indicates presence of hazards that will or can cause minor personal injury or property damage.

NOTICE Indicates special instructions on installation, operation or maintenance that are important but not related to personal injury or property damage.

IMPORTANT

THE OUTDOOR SENSOR SUPPLIED WITH THE BOILER IS RECOMMENDED.

NOTICE If the outdoor sensor is **not used**, the following changes must be made to control settings during control setup:

TARGET ADJUST (in priority menus) must be set either to NONE (constant supply temperature) or 0–10VDC (remote target).

WWSD must be set to OFF.

Part number 550-100-569/0321

SlimFit Control — Advanced mode

SlimFit control setup

1. Set control parameters using the WIZARD option provided on initial start-up or manually enter parameters using control menus explained later in this manual.
2. See **Fast-Track setup** instructions beginning on page 9 for example applications and minimum settings required (using factory defaults).
3. This manual provides set-up information for a single-boiler advanced settings and for all multiple boiler applications.

⚠WARNING

Boiler Model, Altitude are critical settings. Failure to set correctly could result in severe personal injury, death or substantial property damage.

Temperature settings — You must ensure that the **SlimFit** control is set for the proper water temperatures for the system. Excessive water temperature can cause significant property damage in some applications.

Multi-temperature systems — If the heating system includes circuits that require lower temperature water (radiant slab circuits, for example) as well as higher temperature circuits (DHW, finned tube baseboard, etc.), it is recommended to protect low-temperature circuits with limit controls that are wired to an **SlimFit** control external limit circuit. Failure to provide regulation can result in substantial property damage.

SlimFit control overview

Basic Boiler Features:

- Easy configuration with WIZARD step-by-step setup including on-screen help.
- BASIC boiler settings mode for streamlined menu navigation of essential settings.
- Three customizable input/output pairs—use as a 3-Zone control or a 3-Priority control.
- Configure outputs to control System Pumps or 120 VAC Auxiliary equipment.
- System type presets simplify system temperature selection.
- 0-10VDC Input can modulate boiler firing rate or target.
- Integral outdoor reset with warm weather shutdown.

Advanced Boiler Features:

- ADVANCED boiler settings mode unlocks all features and customizable parameters.
- Manage multiple types of System Pumps or 120 VAC Auxiliary accessories.
- Manage staged heating sources using the Additional Heat Demand feature.
- BMS integration with standard MODBUS.

Multiple Boiler (Network) Features:

(see next page for explanation of Priorities)

- Create a network of up to 8 boilers using built-in controls.
- Master boiler controls the modulation and sequencing of boilers on the network to achieve desired system supply temperature.
- Use ALL boiler inputs, not just the first and last boilers, up to 24 customizable inputs across boiler network (3 per unit, maximum of 8 boilers on network).
- Two (2) available Network Priorities allow multiple system types/temperature zones.
- Direct-connected DHW tanks (or other heating zones) can be piped and wired locally to any boiler in the system, not just the first or the last.
- Three system modulation types—SERIES, PARALLEL, AND SMART.
- Three (3) Lead boiler rotation modes (plus OFF).
- Limit the firing rate for each Network Priority independently when heat demands are mismatched using the Max System Rate parameter.
- Fire multiple boilers at initial call for heat to start up quickly for high demand applications using the Minimum Boilers parameter.
- Won't interrupt a Local heat demand (such as direct-connected DHW tank) to satisfy Network heat demand unless all available boilers are at maximum input.
- Simple, 2-wire boiler-to-boiler communication connection.

Additional Heat Demand Features:

- Provides contact and modulating output to activate other boilers or heating sources (a SlimFit boiler collaborating with a heat pump or a different boiler, for examples).
  - Modulating output limited to 10VDC; 108μA.
- Configure to operate additional heat demand functionality 1st (before SlimFit boiler) or 2nd (after SlimFit boiler).
- Select the response time that the primary source is allowed to function before the additional heat demand activates the secondary source.
- Switch between 1st and 2nd based on a set outdoor temperature for use in base loading applications.
- Select if the additional heat source is activated based on the system temperatures being monitored by the SlimFit boiler (system temperature dependent YES).

SlimFit control operation

- The control responds to signals from:
  - Room thermostats
  - DHW aquastats (if used)
  - Temperature sensors — boiler return, boiler supply, flue temperature and, when used, system supply and system return, outdoor temperature. **For optimal performance, it is recommended to install the system supply and return sensors.**
- The control automatically adjusts blower speed (and gas flow rate) to match boiler output to space heating and/or DHW heating demand.
- The control provides three inputs and three outputs (for circulators or auxiliary devices) plus a boiler circulator output.
- Outdoor reset are recommended to be used in all application.
  - The outdoor temperature is used for supply temperature reset operation and for the warm weather shutdown (WWSD) option.
  - See "Outdoor reset operation" on page 4 for complete explanation of outdoor reset settings.
- System presets
  - The SlimFit control provides presets by System Type (see Figure 24, page 45 for complete list).

SlimFit Control — ADVANCED mode *(continued)*

SlimFit control Priorities & Input/Outputs

- For heating installations with multiple systems, the SlimFit control uses **PRIORITIES** to determine the order of operation of the systems.
  - The control's MAX and MIN time settings determine the maximum and minimum times a system will be operated before being turned off to allow another system to operate.
  - A typical example is DHW priority — heat demand from the DHW system is given preference over space heating if assigned to Priority 1.
- Each PRIORITY has its own set of operating parameters.
  - The control prompts the user to select the system type (finned tube baseboard, DHW, etc.) and is factory programmed with parameters suited to each of these system types.
  - The user can also choose CUSTOM to create a system type.
- The SlimFit control provides up to three **PRIORITIES** for single boiler applications and up to four priorities for network boiler applications. The order of operation is:
  - Single boilers: PRIORITY 1, PRIORITY 2, PRIORITY 3.
  - Network boilers: LOCAL PRIORITY 1, NETWORK PRIORITY 1, NETWORK PRIORITY 2, LOCAL PRIORITY 2.
  - For each boiler in a network, this provides up to two **LOCAL** priorities, used for heating systems piped directly to the boiler, such as DHW tanks.
  - **NETWORK** priorities are used for heating systems connected in the primary heating loop and supplied by the boiler network.
- Each boiler has three **INPUT/OUTPUT** pairs (INPUT/OUTPUT 1, 2 and 3.
  - Control setup prompts the user to assign each of these I/O pairs to a PRIORITY. The SlimFit control then knows which system (priority) to operate when any input assigned to that priority receives a call for heat.
  - The SlimFit controls respond to heat calls based on the order of the assigned priorities and the timings set for each priority's operation.

Boiler circulator

- The boiler circulator must be supplied by others.
- The 120 VAC Dry contact for the boiler circulator is located on the boiler's Expansion Module. For each of the priorities, the control can be setup to run the boiler pump or to leave it off. It is recommended to set Boiler Circulator to OFF for directly piped DHW systems with its own circulator.

⚠WARNING The boiler circulator must be installed and connected. Flow through the boiler must be provided during all times of operation. Failure to do so can result in severe personal injury, death or substantial property damage.

Multiple boiler operation

- The SlimFit boiler has an auto detection feature for multiple boiler networks. The Master will automatically detect the presence of the other boilers wired to the network.
- There will be a 30 second to 1 minute period until the Master may see the shadow boilers.
- Each shadow boiler must be assigned a network address, from 2 through 8. The address for each boiler must be unique, NOT selected for any other boiler.
- Afterwards, the Master will build a network based on the communications shared. If a boiler loses communication, the Master will automatically re-assign the lost boiler to where it was before once it is back on the network.
- When network inputs turn on, the Master boiler will enter the Network Modulation routine.
- Using system sensors, the Master will modulate the entire network to meet the energy requirements of Network Priority 1 and Network Priority 2 inputs when they are on.
- When a Local Priority input becomes active (switch closes), modulation for that input is not controlled by the Master, but instead is left to that local boiler using its own local Heat Exchanger Inlet and Outlet sensors.
- Each of the three (3) inputs on the Master or any of the Shadow boilers can be assigned as Network Priority 1 or 2 or assigned as Local Priority 1 or 2. Network Priority settings are common across all the boilers. These Network Priority settings can only be adjusted from the Master boiler.

Sequence of operation

- Figure 22, page 42 is a summary of the operating sequence for the SlimFit control.
  - The statuses shown appear in the display as the SlimFit control cycles the boiler.
  - The display will display red (solid or flashing) if a problem has been detected.

Outdoor reset operation

1. Calculates target temperature for space heating zones based on outdoor temperature.
2. For an explanation of the target temperatures and associated outdoor temperatures, see Figure 1, page 5.
3. The temperature settings discussed below are accessed in the priority menu for the applicable system. For detailed explanations of the priority menus, see Figure 31, page 52.

SUPPLY MAX

1. Set SUPPLY MAX to the required supply water temperature for the system at design maximum heat loss (typically 180°F for finned tube baseboard on new installations).

SUPPLY MIN

1. SUPPLY MIN should equal the desired minimum supply water temperature for the system.
2. This could be set as low as 70°F, which would supply "zero heat" when outdoor temperature is 70°F, because supply water temp would equal room temp.
3. See examples in Figure 1.

SlimFit Control — ADVANCED mode *(continued)*

OD RESET MAX

1. OD RESET MAX means the outdoor temperature at which the target temperature reaches its minimum (SUPPLY MIN).
2. In the examples of Figure 1, this occurs at 70 °F (the factory default).

OD RESET MIN

1. OD RESET MIN means the outdoor temperature at which the target temperature reaches its maximum value (SUPPLY MAX).
2. In the examples of Figure 1, this occurs at 0°F outside (the factory default setting).
3. OD RESET MIN should equal the ODT (outdoor design temperature) for the installation's location.

Remote target operation (0–10VDC input)

1. This function allows a remote analog input to regulate the supply temperature for control operation/modulation. This can be done for any priority, including network and local priorities for multiple boiler networks.
2. The settings discussed below are accessed in the priority menu for the applicable system. For detailed explanations of the priority menus, see Figure 31, page 52.
3. See Figure 2 for an explanation of target temperature vs voltage when using remote target operation.
4. In the priority menu for the applicable system, select 0-10V for the TARGET ADJUST setting.
5. In the same priority menu, select the VOLTS FOR MIN and VOLTS FOR MAX values. VOLTS FOR MIN sets the voltage value for the desired minimum supply temperature. VOLTS FOR MAX sets the voltage value for the desired maximum supply temperature.

Remote modulation operation (0–10VDC input) — Single boilers only

⚠WARNING **Using an external multiple boiler controller** — Remote modulation using an external controller only works with each boiler set up as a SINGLE boiler in the SlimFit Control setup.

1. Use this option for single boilers only. To use 0–10VDC for remote modulation, go to Contractor Menu -> Assign Inputs. Then change Input 1's source to 0–10V. The priority that is assigned to Input 1 cannot not be used by any other Input.
2. The boiler comes on at 0.9VDC and turns off at 0.8VDC. 2 VDC = 20% input. 10 VDC = 100% input. These voltage settings are not adjustable.

Figure 1 Outdoor reset operation

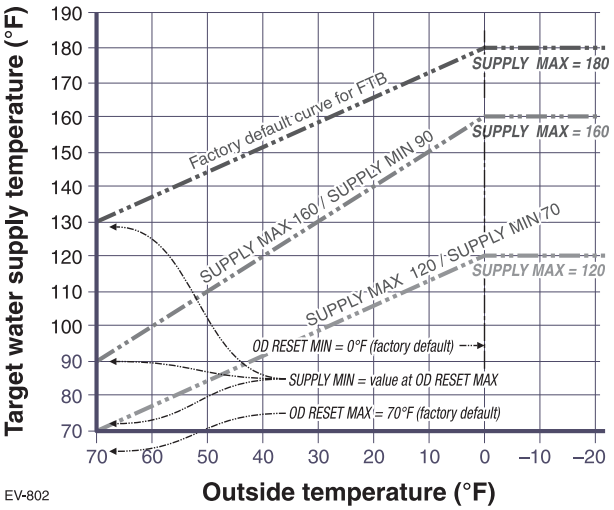

Figure 2 Remote target operation

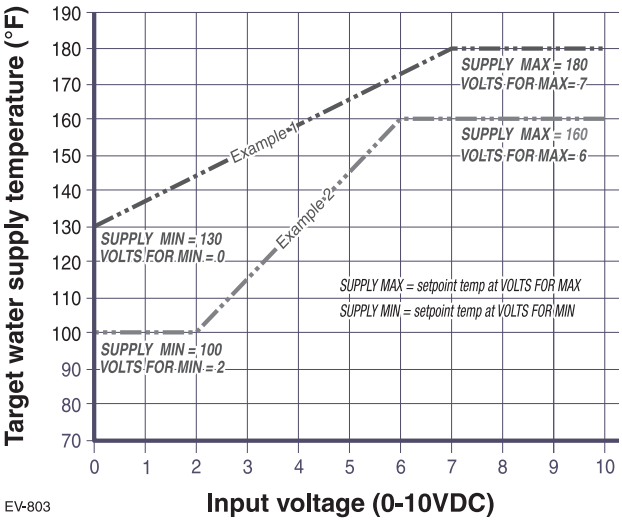

Multiple boiler installations

Placing multiple boilers

1. Locate multiple boilers in boiler room to provide the clearances shown in:
   a. Figure 3 (side-to-side), or
   b. Figure 4 (back-to-back).
2. Provide the indicated clearances around boilers for access and servicing.

WARNING If recommended dimensions are not possible, provide at least the minimum clearances given in the **SlimFit** boiler manual. Also follow applicable local codes.

3. If boilers are floor-mounted, construct a boiler foundation if boiler room floor is uneven or if there is a danger of flooding. Size the foundation to allow for clearance and spacing dimensions shown in Figure 3 or 4.
4. Provide a minimum 30-inch walkway in front of the boilers to ensure accessibility.
5. Uncrate, assemble and mount boilers according to instructions in the **SlimFit** boiler manual.
6. Provide clearances needed for installation of venting, air piping, gas piping, expansion tank, primary circulator and other accessories. Clearances must comply with all applicable codes.

Motorized air dampers

If the air openings are fitted with motorized dampers, electrically interlock the damper to:

- Prevent the boiler from firing if the damper is not fully open.
- Shut the boiler down should the damper close during boiler operation.

To accomplish this interlock, wire an **isolated contact** (proving the damper open) in series with the thermostat input to the boiler. The boiler will not start if this contact is open, and will shut down should it open during operation.

Manifolded combustion air option

1. Multiple SlimFit boilers can use a common combustion air manifold.
   a. See Figure 99, page 110 of SlimFit Boiler Manual for minimum cross sectional area of combined air ducts.
   b. Provide minimum clearance to adjacent vents and grade/snow line as shown in Figure 31 of boiler manual.
   c. Provide minimum free area in duct (adjusted for louver restriction) of **1 square inch per 2,000 Btuh** total boiler input, or divide the total MBH (1000's Btuh) by 2.
   d. Example: For an MBS system with total input of 3,000,000 Btuh, or 3,000 MBH: Divide 3,000 by 2 = 1500 square inches minimum for a combined air duct.
   e. If combustion air damper is used, wire to boilers to prevent operation except after damper has opened (see Motorized air dampers, above).

WARNING **ONLY air piping can be combined. DO NOT use combined vent piping. Flue gas leakage and boiler component damage can occur. Failure to comply could result in severe personal injury, death or substantial property damage.**

Figure 3 Side-to-side mounting of multiple SlimFit boilers

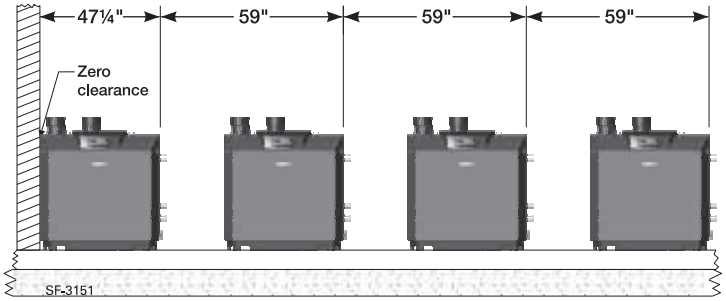

Figure 4 Side-to-side mounting of multiple SlimFit boilers

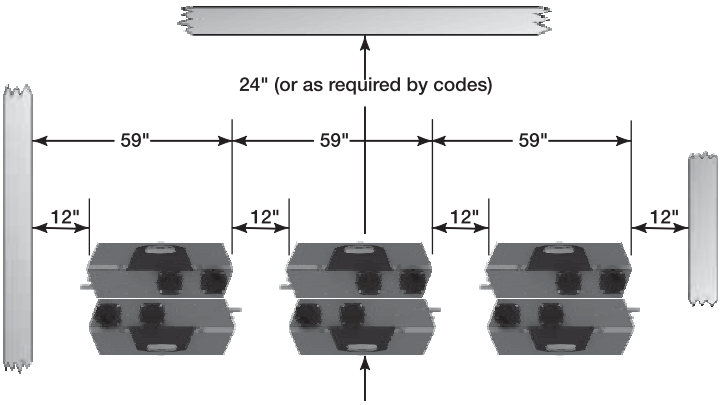

Figure 5 Manifolded combustion air option

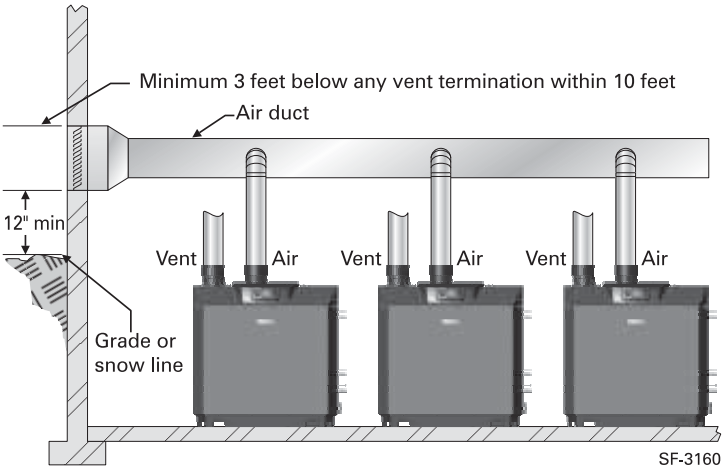

Multiple boiler installations *(continued)*

Easy-Fit® piping installation

1. Main header and Easy-Fit® Manifold pipe sizing.
   a. Size system piping as required for the flow.
   b. Install tees or crosses in the system piping for Easy-Fit® manifolds as shown in Figure 6 or Figure 7. Size manifolds to handle total connected boiler output as shown.
2. Provide connections in main header for Easy-Fit® manifolds as close as possible to the midpoint of multiple boilers.
   a. Use tees for four or less boilers, as in Figure 6.
   b. Use either tees (Figure 6) or crosses (Figure 7) for five or more boilers.
3. Manifold placement:
   a. To alternate spacing for supply and return lines to boilers, reverse the short-end and long-end of the manifolds as shown in Figure 6 and Figure 7.
   b. Return manifold must be on the return side of the main and supply manifold must be on the supply side of the main.
4. Connect from Easy-Fit® manifold branches to boiler supply and return connections using copper or steel pipe, sized for the required flow rate.
5. Install an isolation valve on the supply and return of each boiler as shown in the piping diagrams in this manual. Some local codes may require the use of individual water level controls and limits on each boiler because isolation valves are installed.
6. Install main system air eliminator and primary circulator in supply piping as shown in piping diagrams. Place expansion tank on suction side of system circulator as shown.
7. Install system accessories as shown in drawings.
8. Piping recommendation drawings:
   a. Figure 6 and Figure 7 show details of Easy-Fit® manifolds.
   b. Figure 8 page 8, is a schematic piping drawing showing the locations of typical boiler piping and system piping, including limits and other devices often required by local codes.
   c. Figure 9, page 14 and Figure 11, page 16 are three-dimensional piping drawings of typical multiple boiler installation.
   d. Figure 13, page 18 shows recommended piping when an isolating heat exchanger is needed.
9. If desired, other primary/secondary piping arrangements can be used.

NOTICE When using isolation valves on each boiler, some codes may require additional controls. The control module uses temperature sensors to provide both high limit protection and modulating temperature control, and is UL353 Limit Controls certified to meet ASME CSD-1 and Section IV requirements. The control module also provides low water protection, both with a low water cut-off inside the boiler jacket and by sensing the temperature of the heat exchanger. Some codes/jurisdictions may require additional external controls.

Maximum connected load per manifold:
3-inch manifold — 1400 MBH
4-inch manifold — 2900 MBH

(Do not use manifolds smaller than 3 inch for SF-550 or SF-750 MBS applications.)

Figure 6 Single-sided EZ-Fit Header connection

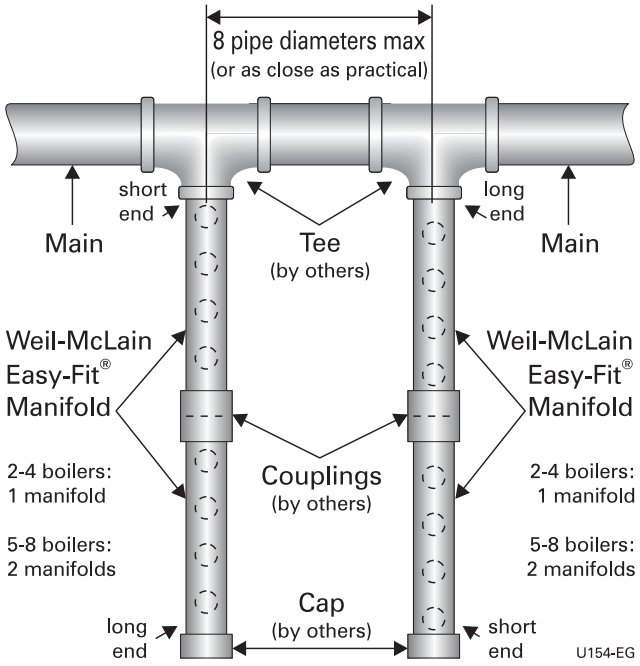

Figure 7 Double-sided EZ-Fit Header connection

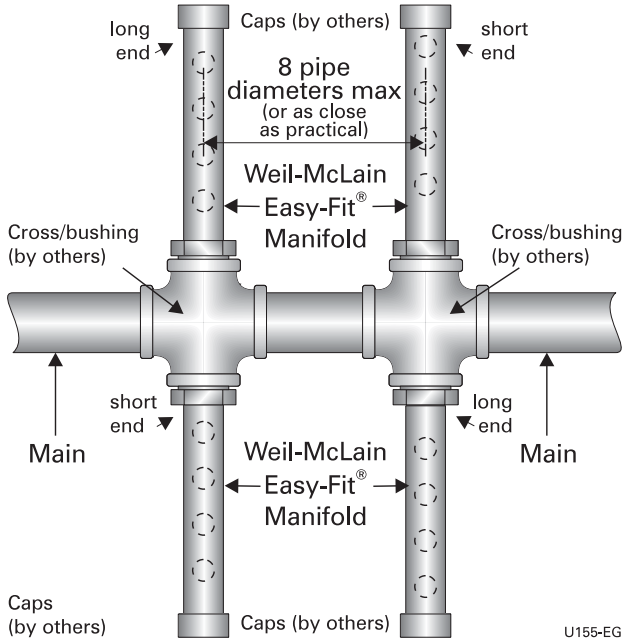

Multiple boiler installations *(continued)*

Figure 8 Piping layout — typical piping for multiple SlimFit boilers, using Weil-McLain Easy-Fit manifolds

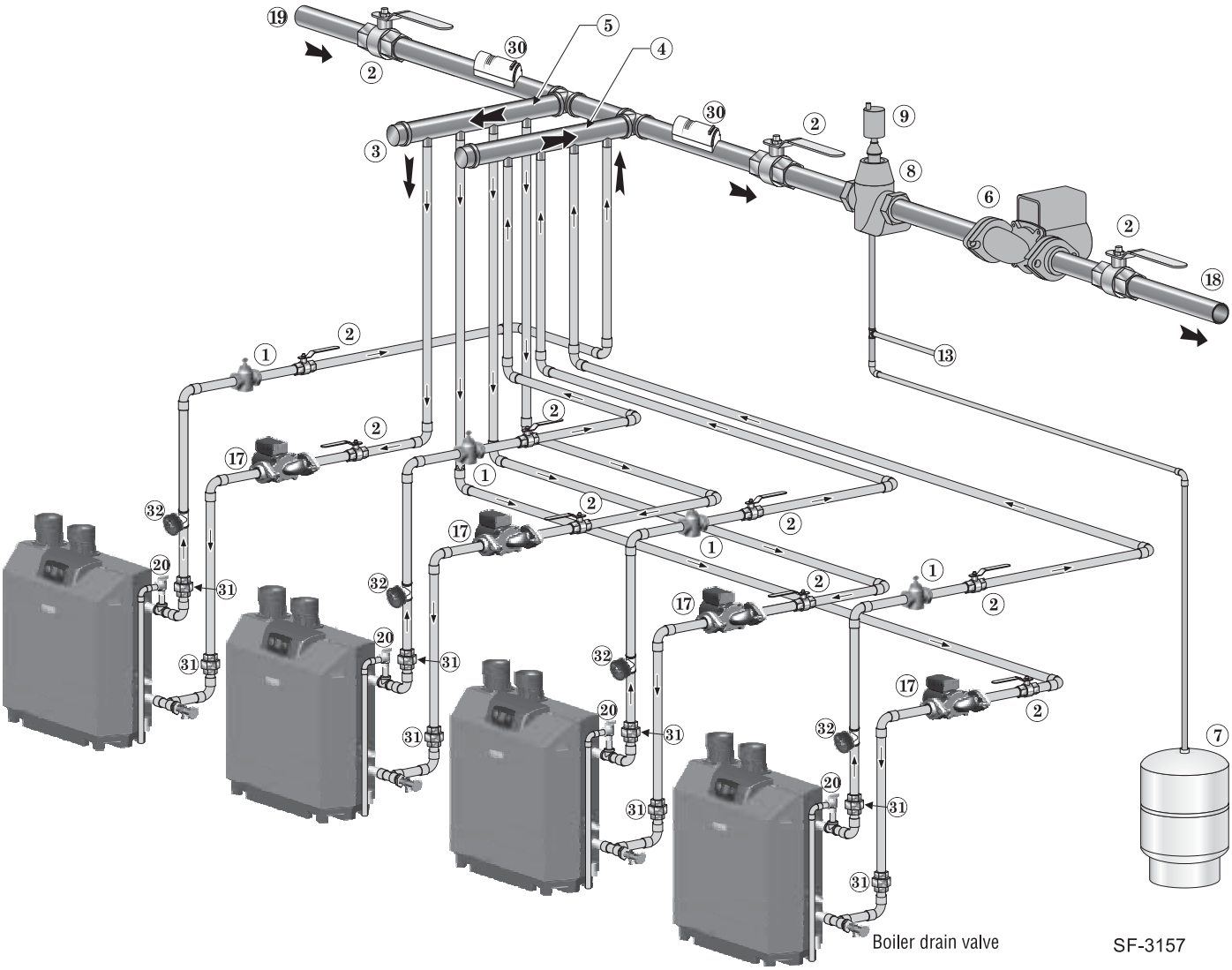

NOTICE Use 2" or larger piping for all connections between boilers and manifolds

Legend — Figure 8	
1 Flow/check valve (each boiler)	12 Isolation valve
2 Isolation valves (when used)	13 Cold water supply (requires items 10, 11 and 12).
3 Caps	17 Boiler circulator (each boiler)
4 Easy-Fit® Manifold (supply) — layout and size per page 7	18 System supply
5 Easy-Fit® Manifold (return) — layout and size per page 7	19 System return
6 Primary circulator	20 Boiler relief valve & discharge piping, installed per SlimFit Boiler Manual.
7 Expansion tank (diaphragm type)	30 Strap system supply and return sensors to lines as shown, at least 6 pipe diameters (but no more than 3 feet) from boiler connection tees.
8 System air eliminator	31 Install a union on the boiler supply and return connections as close as possible to the boiler to allow disconnection for service when required.
9 System automatic air vent	32 Pressure/Temperature gauge installed on boiler outlet.
10 Pressure reducing valve	
11 Check valve or backflow preventer, as required by applicable codes.	

Fast-Track Setup — Requirements by Boiler

Fast-Track Setup

SlimFit control **Fast-Track Setup** takes advantage of the SlimFit control **WIZARD** to provide the shortest possible method to set up the control.

Perform the **Fast-Track Setup** steps on page 10 to ensure the minimum adjustments needed for **ADVANCED** mode control operation are completed.

The remainder of this manual provides detailed information about control setup and operation available for fine tuning, troubleshooting and custom setup applications.

WARNING

Temperature settings — You must ensure that the SlimFit control is set for the proper water temperatures for the system. Excessive water temperature can cause significant property damage in some applications.

Multi-temperature systems — If the heating system includes circuits that require lower temperature water (radiant slab circuits, for example) as well as higher temperature circuits (DHW, finned tube baseboard, etc.), it is recommended to protect low-temperature circuits with limit controls that are wired to an SlimFit control external limit circuit. Failure to provide regulation can result in substantial property damage.

Setup for single boilers

For single boilers not operated as part of an **SlimFit** network, follow the single-boiler setup procedures in the **SlimFit** boiler manual.

NOTICE

Using an external multiple boiler controller — Remote modulation using an external controller only works with each boiler set up as a SINGLE boiler in the SlimFit Control setup. Follow instructions in this manual to setup the control using ADVANCED mode.

Multiple boiler networks

Multiple boiler networks are configured with a **MASTER** boiler and one or more **SHADOW** boilers. (See above for applications using external controller.)

- The **MASTER** boiler control regulates the firing of all boilers when providing heat to the system zones.
- **SHADOW** boilers respond to heat demand from the master control except when operating for local (direct-connected) heat calls.

Priorities

The **SlimFit** control allows assigning multiple priorities. These priorities will be given preference in the order below:

- Multiple boilers: LOCAL PRIORITY 1, NETWORK PRIORITY 1, NETWORK PRIORITY 2, LOCAL PRIORITY 2.
- Single boilers: PRIORITY 1, PRIORITY 2, PRIORITY 3.

NOTICE

DHW circuit in system — For high-demand DHW circuits, the control setting for MIN BOILERS must be set using the NETWORK 1 or NETWORK 2 priority menu after the WIZARD is completed to ensure quick response to demand. See page 53 for a description of the MIN BOILERS setting.

Timings

Timing settings regulate boiler sequencing and ensure minimum and maximum operating times for heating calls on each system. Timings can be adjusted during the Wizard setup or manually, as explained elsewhere in this manual.

Also see page 49 for additional information on control timings and rotation and sequencing methods.

NET MIN ON TIME (multiple boilers only)

- This parameter is available during the Wizard or manually in the NETWORK SETTINGS menu (Figure 27, page 48).
- When a boiler is being called on by the master boiler to satisfy a **network** demand, the boiler will fire for at least as long as the MIN TIME ON NET before it switches to satisfy a Local Priority if one is active.
- This timing avoids short cycling due to changes in demand.

MIN ON TIME

- This parameter is available during the Wizard or manually in the PRIORITY SETTINGS menu (Figure 32, page 54).
- When the boiler is being called on to satisfy a higher priority, the boiler will fire for at least as long as the MIN ON TIME before it switches to satisfy that priority.
- This timing avoids short cycling due to changes in demand.

NET MAX ON TIME (multiple boilers only)

- This parameter is available during the Wizard or manually in the NETWORK SETTINGS menu (Figure 27, page 48).
- When a boiler is being called on by the master boiler to satisfy a **network** demand, the boiler will fire for no longer than the MAX TIME ON NET before it switches to satisfy a Local Priority if one is active.
- This timing avoids a long-duration call from preventing other demands from being met for too long a duration.

MAX ON TIME

- This parameter is available during the Wizard or manually in the PRIORITY SETTINGS menu (Figure 32, page 54).
- When a boiler is being called on by to satisfy a lower priority, the boiler will fire for no longer than the MAX ON TIME before it switches to satisfy that priority.
- This timing avoids a long-duration call from preventing other demands from being met for too long a duration.

Fast-Track Setup — Steps

WARNING The **WIZARD** must be used when using the **Fast-Track Setup** procedure. This is necessary to ensure that all required settings are made. In addition, all instructions in the SlimFit boiler manual must be followed completely. Failure to comply could result in severe personal injury, death or substantial property damage.

Step 1 **Mechanical**	• Install boiler(s) per SlimFit boiler manual and all applicable codes, including vent/air piping and water piping. • See suggested piping in this manual and boiler manual. Each boiler **must** be connected with primary/secondary piping and supplied with a boiler circulator.	• As shown in the suggested piping examples, DHW tanks can be either piped directly off of individual boilers or as a separate zone in the heating system. • See page 6 for additional information on multiple boiler installation options.
Step 2 **Electrical**	For details, see **FIELD WIRING** information beginning on page 22. **BOILER POWER SUPPLY** • Connect minimum 120 VAC power to boiler as directed on the boiler wiring diagram (on boiler and on page 32). **INPUTS & OUTPUTS** • Each boiler provides three input/output pairs. Input circuits are 24 VAC. DO NOT apply voltage. Use dry contacts only. Outputs are 120 VAC, 2.2-amps max (use relays if loads exceed 2.2 amps or if outputs must be 24 VAC or must be isolated contacts). • The input/outputs can be used with zone thermostats and zone circulators or zone valves (requires isolation relays unless valves are 120 VAC), providing up to three zones per boiler on a multiple system. • Each boiler also provides an unpowered output for its boiler circulator. Use a external relay if circulator requires more than 10.0 amps at 120 VAC. • If a system pump is to be operated by the SlimFit controls, connect the pump to any of the available outputs. The system pump can be activated by a remote contact or can be automatically activated on heat demand. Set up for pump operation is done in the ACTIVATE OUTPUT screen of the WIZARD.	**SENSORS** • Connect an outdoor sensor, system supply sensor and system return sensor to at least one of the boilers in a multiple boiler system.. • Preferably, connect outdoor, system supply and system return sensors to more than one boiler to provide redundancy. If one of the sensors fails, the master boiler SlimFit control automatically looks for an available sensor. **MULTIPLE BOILER COMM CABLES** • For multiple boilers, connect boiler-to-boiler communication cables as directed on page 31. **ADDITIONAL INFORMATION** • For flow switch or CAD interlock wiring, see page 31. • For external limit connections, see page 27. • For 0–10VDC inputs, see page 29. **ZONING METHODS** • See wiring and control setup information for typical zoning applications beginning on page 36. • See example systems beginning on page 14.
Step 3 **POWER ON**	NOTICE Follow all instructions in the **SlimFit** boiler manual, including all pre-start-up inspections and final checks. • Turn OFF the manual gas cock at the boiler to prevent gas flow during setup.	• Turn the boiler ON/OFF switch to ON. • Follow the prompts on the screen to reach the BOILER SETTINGS initial start-up screen. • See Figure 20, page 40 for navigation information. Note that the screen sequence changes after initial setup, as shown.
Step 4 **WIZARD**	• Select the **START WIZARD** option from the initial screen **BOILER SETTINGS** menu (see Figure 20, page 40). • Use on-screen help as needed. For additional information, see details in this manual. • **DO NOT** select **SKIP WIZARD** unless the control is to be configured manually.	NOTICE **SINGLE BOILERS** — Set up the control following instructions in the **SlimFit** boiler manual. If **ADVANCED** settings are required, change to **ADVANCED** mode from the **CONTRACTOR** menu. See **ADVANCED** mode setup information elsewhere in this manual.
Step 5 **Finish setup**	• Some additional control settings may need to be changed, depending on the application. • See explanation of SlimFit control operation and settings, beginning on page 41.	• **For high-demand loads requiring fast response, such as network DHW**, access the NETWORK PRIORITY screen for the assigned priority (see Figure 31, page 52). Change the MIN BOILERS to the number of boilers needed for peak load.
Step 6 **Start-up**	• Apply the SlimFit boiler manual instructions to verify the installation and to start up the boiler, using combustion test instruments as directed.	

Fast-Track Setup — The WIZARD

- The **WIZARD** is available only on initial setup of the boiler. It cannot be accessed later. If the **WIZARD** is accidentally by-passed, follow navigation sequences shown on page 46 and page 47. Select **RESET FACTORY DEFAULTS** on the Boiler Settings menu. Follow screen directions. Boiler setup must then be started over from the beginning.
- The **WIZARD** leads through a step-by-step setup procedure designed for the application chosen.
- Context-sensitive help is available to explain the purpose of key setup items.

```
BOILER SETTINGS

HIGH ALTITUDE:          NO
WWSD TEMP:          ###°F



START WIZARD
SKIP WIZARD

FOR DETAILS ON ANY
SELECTED LINE,PRESS
THE ▶ BUTTON.
                     HELP▶
      SELECT▲▼       EDIT■
```

- This screen appears on initial start-up.
- Perform the **WIZARD** steps for every boiler.
- **HIGH ALTITUDE** are critical parameters. They must be entered correctly for each boiler before proceeding.
- Enter the **WWSD** temperature — This sets the outside temperature below which space heating systems will be disabled. **WWSD** must also be selected during system setup to enable it.
- Select **START WIZARD**.
- **DO NOT** select **SKIP WIZARD**. Selecting **SKIP WIZARD** will take the screen to the **USER MENU**. All setup would then have to be done manually.
- **NOTICE** — Once **SKIP WIZARD** has been selected, the **WIZARD** will no longer be available unless the control is set to FACTORY DEFAULT and control start-up is begun again.

```
SLIMFIT WIZARD
   ## OF ##
WHAT IS THE USE OF
 INPUT/OUTPUT-#?

 HEAT/DHW DEMAND
 AUX/PUMP OUTPUT
 NOT USED
NOTE:
120V OUTPUTS HAVE A
2.2AMP LIMIT. IF MORE
CURRENT IS REQUIRED,
USE AN EXTERNAL
CONTACT.

◀BACK SELECT▲▼  NEXT■
```

- Each boiler provides three input/output pairs. Each pair can be setup to function as a call for heat with output or to perform an auxiliary function, such as operating a system pump.
- After the WIZARD screens are completed for **INPUT 1**, the WIZARD starts over with **INPUT/OUTPUT 2**, then to **INPUT/OUTPUT 3** after **2** is completed.
- Select **HEAT/DHW DEMAND** if the input/output is connected to a heating or DHW zone or system. The input could be a zone thermostat or end switch. The output could be 120 VAC to a circulator (2.2 amps or less) or isolation relay.
- Select **AUX PUMP/ OUTPUT** if the input is to be used for a system pump, combustion air damper interlock, etc.
- To operate a **system pump**, setup the input as **AUX PUMP/OUTPUT**. Connect the corresponding output to the system pump or pump relay (if pump load exceeds 2.2 amps). When the **ACTIVATE OUTPUT #** screen appears, select **ANY INPUT BY ITS PRIORITY SETTINGS** as the operating mode.
- Select **NOT USED** if the input/output is not needed.

```
SLIMFIT WIZARD
   ## OF ##
WHAT PRIORITY IS
 INPUT/OUTPUT-#?

PRIORITY 1-LOCAL 1

PRIORITY 2-NETWORK 1

PRIORITY 3-NETWORK 2

PRIORITY 4-LOCAL 2

                     HELP▶
◀BACK SELECT▲▼       NEXT■
```

- For multiple boiler applications, the **SlimFit** control provides up to four priorities, as listed on this screen. Preference is given to these priorities in the order shown (Priority 1 through 4).
- Select which priority will be operated by this input/output.
- All boilers can operate on demand from **Network priorities**.
- NETWORK PRIORITIES
  - Any input on any boiler can be assigned to a network priority (NETWORK PRIORITY 1 or NETWORK PRIORITY 2).
  - The WIZARD will only allow setting up a Network Priority on the Master boiler. It will skip setting up a Network Priority on all shadow boilers.
  - All boilers on the network will fire to meet network demands
- LOCAL PRIORITIES
  - Any boiler can use its input/outputs to operate up to two local priorities (LOCAL PRIORITY 1 and LOCAL PRIORITY 2). This applies only for heating loops directly piped to the boiler.
  - Local demands are only satisfied by the boiler to which the input is wired. Local heating loops must be directly piped to the boiler.

```
SLIMFIT WIZARD
   ## OF ##
 WHAT SYSTEM TYPE IS
 PIPED TO OUTPUT-#?
FAN COIL
FINNED TUBE BASEBOARD
CAST IRON BASEBOARD
CAST IRON RADIATOR
RADIANT-SLAB ON GRADE
RADIANT-THIN SLAB
RADIANT-BELOW FLOOR
RADIANT-ABOVE FLOOR
DHW
CUSTOM-########
                     HELP▶
◀BACK SELECT▲▼       NEXT■
```

- Use this screen to select the **system type** for this priority.
- The control will automatically set operating parameters to suit the system type chosen.
- To see factory default settings for each system, see Figure 24, page 45.
- Operating parameters can be customized in the next screen, if desired.
- Select **CUSTOM** to manually configure the operating settings for the system.
- **NETWORK PRIORITY 1 or 2** — This screen will not show on a shadow boiler if the input/output is assigned to a network priority. The screen will only appear on the Master boiler, where the priority must be configured.

Fast-Track Setup — The WIZARD *(continued)*

If TARGET ADJUST = ODT

```
      SLIMFIT WIZARD
        ## OF ##
SYSTEM TYPE:########
TARGET MOD SENSOR:
            BOILER OUT
TARGET ADJUST:  ODT
SUPPLY MAX   :  ###°F
SUPPLY MIN   :  ###°F
OD RESET MAX:   ###°F
OD RESET MIN:   ###°F
BOOST TIME:     ###MIN
RUN BOILER PUMP?  YES
RUN AUX/PUMP OUT? YES
MAX ON TIME:    ##  MIN
                  HELP▶
◀BACK SELECT▲▼   NEXT■
```

If TARGET ADJUST = 0–10V

```
      SLIMFIT WIZARD
        ## OF ##
SYSTEM TYPE:########
TARGET MOD SENSOR:
            BOILER OUT
TARGET ADJUST:  0-10V
SUPPLY MAX   :  ###°F
SUPPLY MIN   :  ###°F
VOLTS FOR MAX:  ###°V
VOLTS FOR MIN:  ###°V
BOOST TIME:     ###MIN
RUN BOILER PUMP?  YES
RUN AUX/PUMP OUT? YES
MAX ON TIME:    ##  MIN
                  HELP▶
◀BACK SELECT▲▼   NEXT■
```

If TARGET ADJUST = NONE

```
      SLIMFIT WIZARD
        ## OF ##
SYSTEM TYPE:########
TARGET MOD SENSOR:
            BOILER OUT
TARGET ADJUST:  NONE
SUPPLY MAX   :  ###°F



RUN BOILER PUMP?  YES
RUN AUX/PUMP OUT? YES
MAX ON TIME:    ##  MIN
                  HELP▶
◀BACK SELECT▲▼   NEXT■
```

- **SYSTEM TYPE** – Read only (assigned in previous step).
- **TARGET MOD SENSOR** – Read only for network boilers, adjustable for single boilers – Shows which sensor reading is used for modulation. Boiler sensor is default for local priorities. System sensor is default for network priorities.
- **TARGET ADJUST** – Select how target temperature is calculated —

  NONE (no reset, fixed target temperature = SUPPLY MAX)

  ODT (outdoor reset operation; default setting). Target temperature is calculated from the outdoor reset curve. SUPPLY MAX is target temperature when outside temperature equals OD RESET MAX. SUPPLY MIN is target temperature when outside temperature equals OD RESET MIN. At outdoor temperatures in between, target temperature is scaled proportionally. See Figure 1, page 5 for details.

  0–10V (target temperature based on input from remote source). SUPPLY MAX is target temperature at VOLTS FOR MAX value. SUPPLY MIN is target temperature at VOLTS FOR MIN value. For voltage values between max and min, target temperature is scaled proportionally. See Figure 2, page 5 for details.
- **SUPPLY MAX** – Set SUPPLY MAX to the required supply water temperature for the system at design maximum heat loss (typically 180°F for finned tube baseboard on new installations.)
- **SUPPLY MIN** – SUPPLY MIN should equal the desired minimum supply water temperature for the system. This line will not show if Target Adjust is selected as NONE.
- **OD RESET MAX** – means the outdoor temperature at which the target temperature reaches its minimum (SUPPLY MIN). (Does not appear if 0–10V is selected for Target Adjust.)
- **OD RESET MIN** – means the outdoor temperature at which the target temperature reaches its maximum value (SUPPLY MAX). (Does not appear if 0–10V is selected for Target Adjust.)
- **VOLTS FOR MAX** – Appears if 0–10V is selected for Target Adjust. Set the voltage at which SUPPLY MAX temperature is required.
- **VOLTS FOR MIN** – Appears if 0–10V is selected for TARGET ADJUST. Set the voltage at which SUPPLY MIN temperature is required. For voltages between Min and Max, the target temperature will be adjusted on a linear curve.
- **BOOST TIME** – Every time the call for heat surpasses this duration of time the target temp will boost up 10F. It will cap off at Supply Max.
- **RUN BOILER PUMP** – Selects whether the Boiler Pump is turned on while running on this call for heat. This setting is YES for network priorities and is not adjustable.
- **RUN AUX PUMP/ OUT** – Selects whether Inputs/Outputs in the system configured as AUX PUMP/OUTPUT are turned on while running on this call for heat.
- **MAX ON TIME / MIN ON TIME** – Maximum or minimum time the network will run on this priority if it is being asked to run on another network priority. MAX shows for Network Priority 1, MIN shows for Network Priority 2. This line ONLY shows on the Master boiler Wizard. It does not appear on Shadow boilers.

```
      SLIMFIT WIZARD
        ## OF ##
 ACTIVATE OUTPUT-#:
-ALWAYS ON
-EXTERNAL SWITCH
-OUTDOOR BELOW WWSD
-ANY INPUT
-ANY INPUT BY ITS
  PRIORITY SETTINGS
-ANY BURNER DEMAND



                  HELP▶
◀BACK SELECT▲▼   NEXT■
```

- Use this screen to set when a SYSTEM PUMP/AUX output is activated. For detailed explanation, see Figure 34, page 57 and Figure 35, page 57.

Fast-Track Setup — The WIZARD *(continued)*

```
SLIMFIT WIZARD
  ## OF ##
LOCAL◀-▶NETWORK
SWITCHING TIMES

LP1 MAX ON TIME:  ###M
    |  ▲
    ▼  |
NET MIN ON TIME:  ###M
NET MAX ON TIME:  ###M
    |  ▲
    ▼  |
LP2 MIN ON TIME:  ###M

NEXT STEP         HELP▶
◀BACK SELECT▲▼    EDIT■
```

- The timings set on this screen prevent the boiler from operating too long on one demand if another demand is present. They also prevent short cycling on a demand.
- LP1 and LP2 are times for local priorities.
- MIN NET ON TIME and MAX NET ON TIME are the maximum and minimum times this boiler will dedicate to a call from a network demand.

```
SLIMFIT WIZARD
  ## OF ##
BOILER SEQUENCING
SEQUENCE TYPE:
                  SMART
BASERATE HIGH:    ###%
BASERATE LOW:     ###%

LEAD BOILER ROTATE:
  INCREMENTAL HOURS
ROTATE FREQ:##DAYS
FORCE LEAD ROTATE:YES

NEXT STEP
                  HELP▶
◀BACK SELECT▲▼    NEXT■
```

- Use this screen to set how boilers are sequenced and how usage is rotated between boilers on the network.
- For a complete explanation of sequencing and rotation, see page 49 and page 50.
- **Sequencing** means the way in which boiler firing rate is controlled as boilers are turned on and off by the master boiler.
  - Three SEQUENCE TYPES are available: SERIES sequencing allows each boiler to reach full input before bringing on the next boiler in sequence. PARALLEL sequencing uses a limiter, called BASERATE HIGH, to limit the firing rate before adding additional boilers. SMART sequencing (factory default setting) uses a low firing rate setting, called BASERATE LOW, to keep boilers at a low firing rate, bringing on additional boilers at reduced rate until all boilers are on if necessary. Boilers are then allowed to modulate together as high as necessary to meet demand.
- **Rotation** means how and how often the boiler firing order is changed.
  - LEAD BOILER ROTATE options are based on how long a boiler has operated. Select either OFF, BY BOILER ID, TOTAL HOURS or INCREMENTAL HOURS. See detailed explanation of options on page 49.
  - Use the ROTATE FREQ setting to control how often the rotation sequence is changed.
  - FORCE LEAD ROTATE – If set to YES, then when the frequency timer expires and the new order is calculated, this forces the new boiler order to take effect while a heat demand is currently active.

```
SLIMFIT WIZARD
  ## OF ##
SET DATE & TIME

TIME:   HH:MM AM


DATE:   MM/DD/YY



◀BACK SELECT▲▼   NEXT■
```

- This screen appears ONLY on the master boiler, not on shadow boilers.
- Set the time and date to ensure that control logs accurately record time/date of occurrences.
- Time and date information is provided to the shadow boilers by the master boiler.

```
SLIMFIT WIZARD
  ## OF ##
MAINTENANCE INFO
NAME:##########
PHONE:###-###-####

MODEL:#######  ###-##
CP#:##########
INSTALLED:     DD/MM/YY
LAST DATE:     DD/MM/YY
NEXT DATE:     DD/MM/YY
INTERVAL SET:12MONTHS

WIZARD COMPLETE
                  HELP▶
◀BACK SELECT▲▼    NEXT■
```

- Use this screen to enter relevant data about the installer and boiler.
- See Figure 36, page 59 for full explanation of the inputs on this menu.

Fast-Track Setup — Typical Application A

Figure 9 Typical Application A — Piping layout — typical piping for multiple SlimFit boilers, using Weil-McLain Easy-Fit manifolds (2-boiler system) (adjust boiler connections as required for other boiler models)

NOTICE:
This method does not provided DHW redundancy. DHW can only be supplied when Boiler 2 is operational.

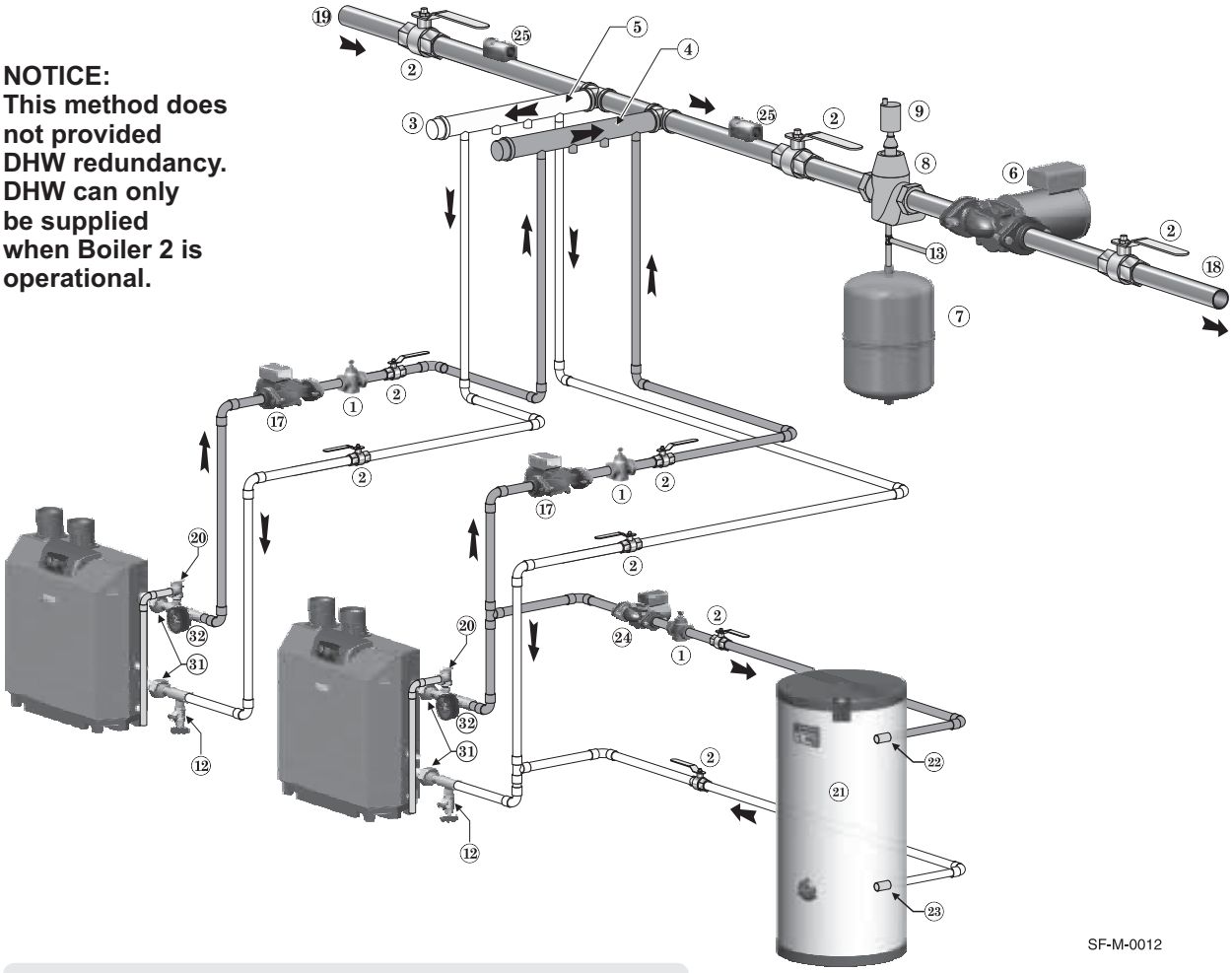

Suggested DHW boiler-side pipe sizing *(for max 0.04 feet head loss per foot of total equivalent length, TEL)*	Flow rate	Size	Flow rate	Size
	1 – 3.9 gpm	¾	24 – 45 gpm	2
	3.9 – 7.1 gpm	1	45 – 75 gpm	2½
	7.1 – 16 gpm	1¼	75 - 140 gpm	3
	16 – 24 gpm	1½	140 – 290 gpm	4

See Figure 10, page 15 for setting up an alternate configuration if DHW is located in the system as a zone instead of being directly connected.

Legend — Figure 9

1 Flow/check or spring check valve.
2 Isolation valves (when used).
3 Caps.
4 Easy-Fit® Manifold (supply) — layout and size per page 7.
5 Easy-Fit® Manifold (return) — layout and size per page 7.
6 System circulator. (not used if system is circulator zoned)
7 Expansion tank (diaphragm type).
8 System air eliminator.
9 System automatic air vent.
12 Boiler drain valves.
13 Cold water supply (per applicable codes).
17 Boiler circulator — circulates water between boiler and Easy-Fit® Manifolds.
18 System supply.
19 System return.
20 Boiler relief valve and discharge piping, installed per **SlimFit** boiler manual.
21 Indirect-fired storage water heaters (Weil-McLain Aqua Plus Line shown) — Example is shown connected to one boiler of the system. Setup is shown on the next page for this configuration and also for the option of a DHW tank installed as a system zone.
22 DHW boiler water supply, typical.
23 DHW boiler water return, typical.
24 DHW boiler-side circulator and flow/check valve.
25 Strap system supply and return sensors to lines as shown, at least 6 pipe diameters (but no more than 3 feet) from boiler connection tees. For redundancy, you can install a supply and return sensor connected to each boiler.
31 Unions.
32 Pressure/Temperature gauge installed on boiler outlet.

Fast-Track Setup — Typical Application A *(cont.)*

WARNING **Boiler Model, Altitude are critical settings.** Failure to set correctly could result in severe personal injury, death or substantial property damage.

Figure 10 Typical Application A — multiple boiler system — setup requirements (parameters not listed below can be left at factory default settings unless special needs indicate different settings)

SETUP FOR Figure 9, page 14 AS SHOWN (DHW directly connected)

Boiler Wiring and Control Settings (See Figure 9, page 14 for items referenced)

Boiler ID	TT input	Wired from:	Input Assignment	Aux Option	Output	Wired to: ***
1 Master	1	Zone 1 Tstat	Priority 2 - Network 1	N/A	1	Zone 1 Circ/Valve
	2	Zone 2 Tstat	Priority 2 - Network 1	N/A	2	Zone 2 Circ/Valve
	3	No Wire	Aux Pump/Output *	Any TT Input By It's Priority Settings	3	System Circ Relay (Item 6) *
2 Shadow	1	DHW Tstat	Priority 1 - Local 1	N/A	1	DHW Circ. (Item 24)
	2	Zone 3 Tstat	Priority 2 - Network 1	N/A	2	Zone 3 Circ/Valve
	3	Zone 4 Tstat	Priority 2 - Network 1	N/A	3	Zone 4 Circ/Valve

* System circulator will not be used if system is circulator zoned. Aux Pump/Output would not be required.

Priority Settings

Priority #	Setting	Value	Priority #	Setting	Value
Priority 1 – Local 1 (Boiler 2 only)	System Type	DHW	Priority 2 – Network 1 (Boiler 1 only)	System Type	Select heating system type
	Run Blr Pump	NO		Run Blr Pump	YES
	Run Aux Output	NO		Run Aux Output	YES

SETUP IF DHW IS LOCATED IN SYSTEM AS A ZONE

Boiler Wiring and Control Settings (See Figure 9, page 14 for items referenced)

Boiler ID	TT input	Wired from:	Input Assignment	Aux Option	Output	Wired to: ***
1 Master	1	Zone 1 Tstat	Priority 3 - Network 2	N/A	1	Zone 1 Circ/Valve
	2	Zone 2 Tstat	Priority 3 - Network 2	N/A	2	Zone 2 Circ/Valve
	3	No Wire	Aux Pump/Output *	Any TT Input By It's Priority Settings	3	System Circ (Item 6) *
2 Shadow	1	DHW Tstat (Item 26)	Priority 2 - Network 1	N/A	1	DHW Circ/Valve
	2	Zone 3 Tstat	Priority 3 - Network 2	N/A	2	Zone 3 Circ/Valve
	3	Zone 4 Tstat	Priority 3 - Network 2	N/A	3	Zone 4 Circ/Valve

* System circulator will not be used if system is circulator zoned. Aux Pump/Output would not be required.

Priority Settings

Priority #	Setting	Value	Priority #	Setting	Value
Priority 2 – Network 1	System Type	DHW	Priority 3 – Network 2	System Type	Select heating system type
	Run Blr Pump	YES		Run Blr Pump	YES
	Run Aux Output	YES		Run Aux Output	YES

*** Outputs are 120 VAC maximum 2.2 amps. Use relay for other voltages or higher amperages.

Fast-Track Setup — Typical Application B

Figure 11 Typical Application B — Piping layout — typical piping for multiple SlimFit boilers, with DHW storage heaters (4-boiler system) (adjust boiler connections as required for other boiler models)

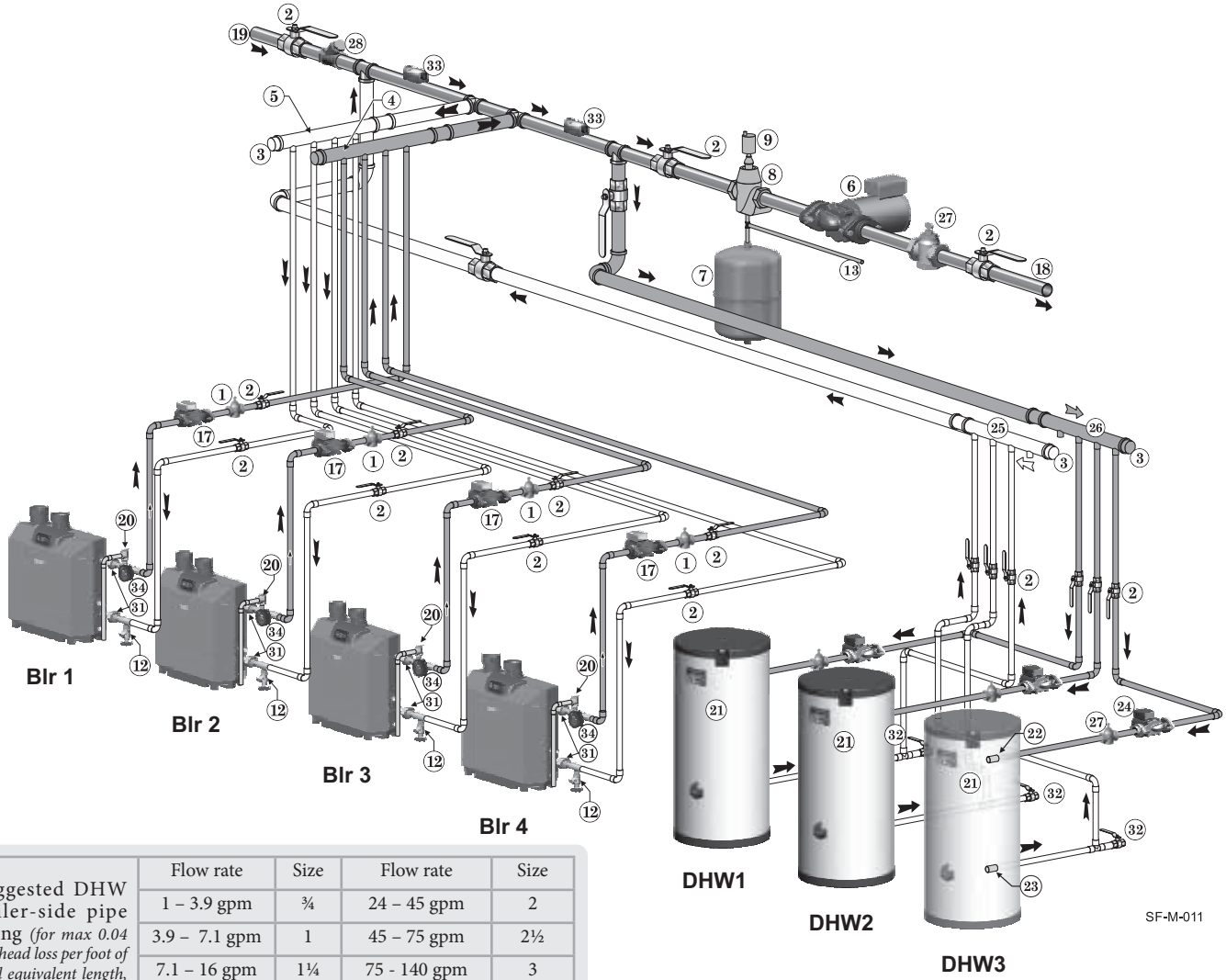

Suggested DHW boiler-side pipe sizing *(for max 0.04 feet head loss per foot of total equivalent length, TEL)*	Flow rate	Size	Flow rate	Size
	1 – 3.9 gpm	¾	24 – 45 gpm	2
	3.9 – 7.1 gpm	1	45 – 75 gpm	2½
	7.1 – 16 gpm	1¼	75 - 140 gpm	3
	16 – 24 gpm	1½	140 – 290 gpm	4

Legend — Figure 11

1 Flow/check or spring check valve.
2 Isolation valves (when used).
3 Caps.
4 Easy-Fit® Manifold (supply) — layout and size per page 7.
5 Easy-Fit® Manifold (return) — layout and size per page 7.
6 System circulator (not used if system is circulator zoned).
7 Expansion tank (diaphragm type).
8 System air eliminator.
9 System automatic air vent.
12 Boiler drain valve
13 Cold water supply (per applicable codes).
17 Boiler circulator — circulates water between boiler and Easy-Fit® Manifolds.
18 System supply.
19 System return.
20 Boiler relief valve and discharge piping, installed per **SlimFit** boiler manual.
21 Indirect-fired storage water heaters (Weil-McLain Aqua Plus Line shown) — Example is shown with each water heater having its own circulator. Alternate: reverse-return boiler-side piping using a single circulator.
22 DHW boiler water supply, typical.
23 DHW boiler water return, typical.
24 DHW boiler-side circulators.
25 DHW boiler-side supply Easy-Fit® Manifold.
26 DHW boiler-side return Easy-Fit® Manifold.
27 Flow/check or spring check valves (to prevent induced or gravity flow in heating system or DHW piping).
28 Check valve.
29 See water heater manual for DHW piping — The boiler-side piping in this example uses a separate circulator for each DHW tank.
31 Unions.
32 Drain valves for DHW boiler water piping.
33 Strap system supply and return sensors to lines as shown, at least 6 pipe diameters (but no more than 3 feet) from boiler connection tees. For redundancy, you can install multiple sensors, each connected to a different boiler.
34 Pressure/Temperature gauge installed on boiler outlet.

NOTICE This piping is suggested only. The layout above can be controlled with the boiler control's multi-boiler function, DHW priority or by an external control that provides multiple boiler heating and DHW priorities. This will provide domestic priority by disabling the heating system circulator any time there is a DHW call for heat. The boiler circulators, item 17, must operate on any call for heat, whether heating system or DHW. Offset the DHW boiler-side supply and return manifolds as shown so the total run of pipe and fittings to each of the water heaters is approximately equal.

Fast-Track Setup — Typical Application B *(cont.)*

WARNING **Boiler Model, Altitude are critical settings.** Failure to set correctly could result in severe personal injury, death or substantial property damage.

Figure 12 Typical Application B — multiple boiler system — setup requirements (parameters not listed below can be left at factory default settings unless special needs indicate different settings)

Boiler Wiring and Control Settings (See Figure 11, page 16 for items referenced)

Boiler ID	TT input	Wired from:	Input Assignment	Aux Option	Output	Wired to: ***
1 Master	1	No Wire	Aux Pump/Output **	Any TT Input By It's Priority Settings	1	System Circ (Item 6) **
	2	Zone 1 Tstat	Priority 3 - Network 2	N/A	2	Zone 1 Circ/Valve
	3	Zone 2 Tstat	Priority 3 - Network 2	N/A	3	Zone 2 Circ/Valve
2 Shadow	1	Zone 3 Tstat	Priority 3 - Network 2	N/A	1	Zone 3 Circ/Valve
	2	Zone 4 Tstat	Priority 3 - Network 2	N/A	2	Zone 4 Circ/Valve
	3	Zone 5 Tstat	Priority 3 - Network 2	N/A	3	Zone 5 Circ/Valve
3 Shadow	1	Zone 6 Tstat	Priority 3 - Network 2	N/A	1	Zone 6 Circ/Valve
	2	Zone 7 Tstat	Priority 3 - Network 2	N/A	2	Zone 7 Circ/Valve
	3	Zone 8 Tstat	Priority 3 - Network 2	N/A	3	Zone 8 Circ/Valve
4 Shadow	1	DHW1 Tstat	Priority 2 - Network 1	N/A	1	DHW1 Circ
	2	DHW2 Tstat	Priority 2 - Network 1	N/A	2	DHW2 Circ
	3	DHW3 Tstat	Priority 2 - Network 1	N/A	3	DHW3 Circ

** System circulator will not be used if system is circulator zoned. Aux Pump/Output would not be required.
*** Outputs are 120 VAC maximum 2.2 amps. Use relay for other voltages or higher amperages.

Priority Settings

Priority #	Setting	Value	Priority #	Setting	Value
Priority 2 – Network 1	System Type	DHW	Priority 3 – Network 2	System Type	Select heating system type
	Run Blr Pump	YES		Run Blr Pump	YES
	Run Aux Output	NO		Run Aux Output	YES
	Min Blrs *	Select as needed for quick response			

* Min Blrs setting is accessible in the Priority menus (see Figure 27, page 48). It is not included in the Wizard setup options.

NOTICE **Alternate piping: DHW circuit piped elsewhere in system —** If the DHW circuit is piped elsewhere in the system, the above settings will work only if the System Pump is activated during DHW calls for heat. To set the control for this, set PRIORITY 2 — NETWORK 1 with RUN AUX PUMP/ OUTPUT set to YES instead of NO.

Fast-Track Setup — Typical Application C

Figure 13 Typical Application C — Piping layout — typical piping for multiple SlimFit boilers, using isolation exchanger (adjust boiler connections as required for other boiler models)

Use isolation heat exchanger for:

1. Large volume systems with high mineral content in water.
2. Systems exposed to untreated quantities of makeup water.
3. Old systems severely contaminated with scale and rust buildup inside piping and heat distribution units.
4. Process applications.
5. Commercial service water applications.
6. High water pressure applications, requiring pressure relief setting in heating system more than 30 PSIG (tall buildings). See notes below.

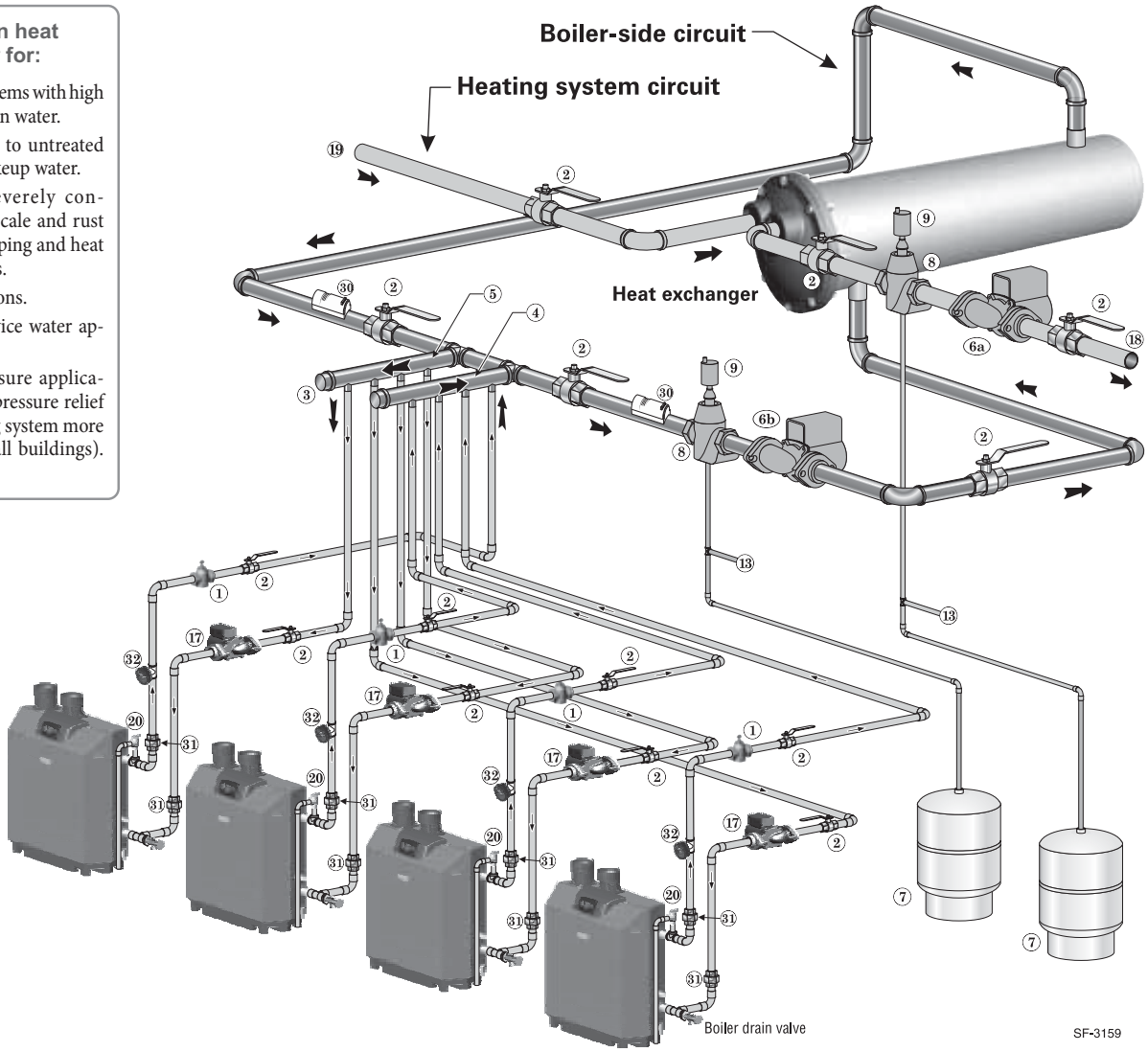

NOTICE **Heat exchanger type —** This illustration shows a shell and tube exchanger. Other exchanger types may be used if suitable for the system water conditions.

Legend — Figure 13

1 Flow/check or spring check valve. 2 Isolation valves (when used). 3 Cap. 4 Easy-Fit® Manifold (supply) — layout and size per page 7. 5 Easy-Fit® Manifold (return) — layout and size per page 7. 6a Heating system circulator (exchanger tube-side). 6b Heat exchanger shell-side circulator 7 Expansion tanks (diaphragm type). 8 System air eliminator. 9 System automatic air vent.	12 Boiler drain valves. 13 Cold water supply connections (per applicable codes). 17 Boiler circulator — circulates water between boiler and Easy-Fit® Manifolds. 18 Heating system supply. 19 Heating system return. 20 Boiler relief valve and discharge piping, installed per **SlimFit** boiler manual. 21 Strap system supply and return sensors to lines as shown, at least 6 pipe diameters (but no more than 3 feet) from boiler connection tees. For redundancy, you can install multiple sensors, each connected to a different boiler. 31 Unions. 32 Pressure/Temperature gauge installed on boiler outlet.	Notes: 1. Contact heat exchanger manufacturer for heat exchanger shell-side and tube-side piping and circulator requirements. Tube-side flow and temperatures must meet heating system requirements. 2. Contact heat exchanger manufacturer for sizing heat exchanger. 3. Heat exchanger shell-side circuit requires its own expansion tank as shown. 4. Heating system circuit requires its own expansion tank, as shown, plus its own relief valve set to protect heating system and heat exchanger piping and components. 5. When individual isolation valves are used, individual boiler and level controls may be required.

Fast-Track Setup — Typical Application C *(cont.)*

WARNING **Boiler Model, Altitude are critical settings.** Failure to set correctly could result in severe personal injury, death or substantial property damage.

Figure 14 Typical Application C — multiple boiler system — setup requirements (parameters not listed below can be left at factory default settings unless special needs indicate different settings)

Boiler Wiring and Control Settings (See Figure 13, page 18 for items referenced)						
Boiler ID	**TT input**	**Wired from:**	**Input Assignment**	**Aux Option**	**Output**	**Wired to: *****
1 Master	1	No Wire	Aux Pump/Output **	Any TT Input By It's Priority Settings **	1	System Circ (Item 6a)
	2	No Wire	Aux Pump/Output	Any TT Input By It's Priority Settings	2	Shell-side Circ (Item 6b)
	3	Zone 1 Tstat	Priority 2 - Network 1	N/A	3	Zone 1 Circ/Valve
2 Shadow	1	Zone 2 Tstat	Priority 2 - Network 1	N/A	1	Zone 2 Circ/Valve
	2	Zone 3 Tstat	Priority 2 - Network 1	N/A	2	Zone 3 Circ/Valve
	3	Zone 4 Tstat	Priority 2 - Network 1	N/A	3	Zone 4 Circ/Valve
3 Shadow	1	Zone 5 Tstat	Priority 2 - Network 1	N/A	1	Zone 5 Circ/Valve
	2	Zone 6 Tstat	Priority 2 - Network 1	N/A	2	Zone 6 Circ/Valve
	3	Zone 7 Tstat	Priority 2 - Network 1	N/A	3	Zone 7 Circ/Valve
4 Shadow	1	Zone 8 Tstat	Priority 2 - Network 1	N/A	1	Zone 8 Circ/Valve
	2	Zone 9 Tstat	Priority 2 - Network 1	N/A	2	Zone 9 Circ/Valve
	3	Zone 10 Tstat	Priority 2 - Network 1	N/A	3	Zone 10 Circ/Valve
** System circulator will not be used if system is circulator zoned. Aux Pump/Output would not be required. *** Outputs are 120 VAC maximum 2.2 amps. Use relay for other voltages or higher amperages.						

Priority Settings					
Priority #	**Setting**	**Value**	**Priority #**	**Setting**	**Value**
Priority 2 – Network 1	System Type	Select CUSTOM and set temperatures and other as needed for heat exchanger			
	Run Blr Pump	YES			
	Run Aux Output	YES			

Fast-Track Setup — Typical Application D

Figure 15 Typical Application D — Piping layout — typical piping for multiple SlimFit boilers, using isolation exchanger (adjust boiler connections as required for other boiler models)

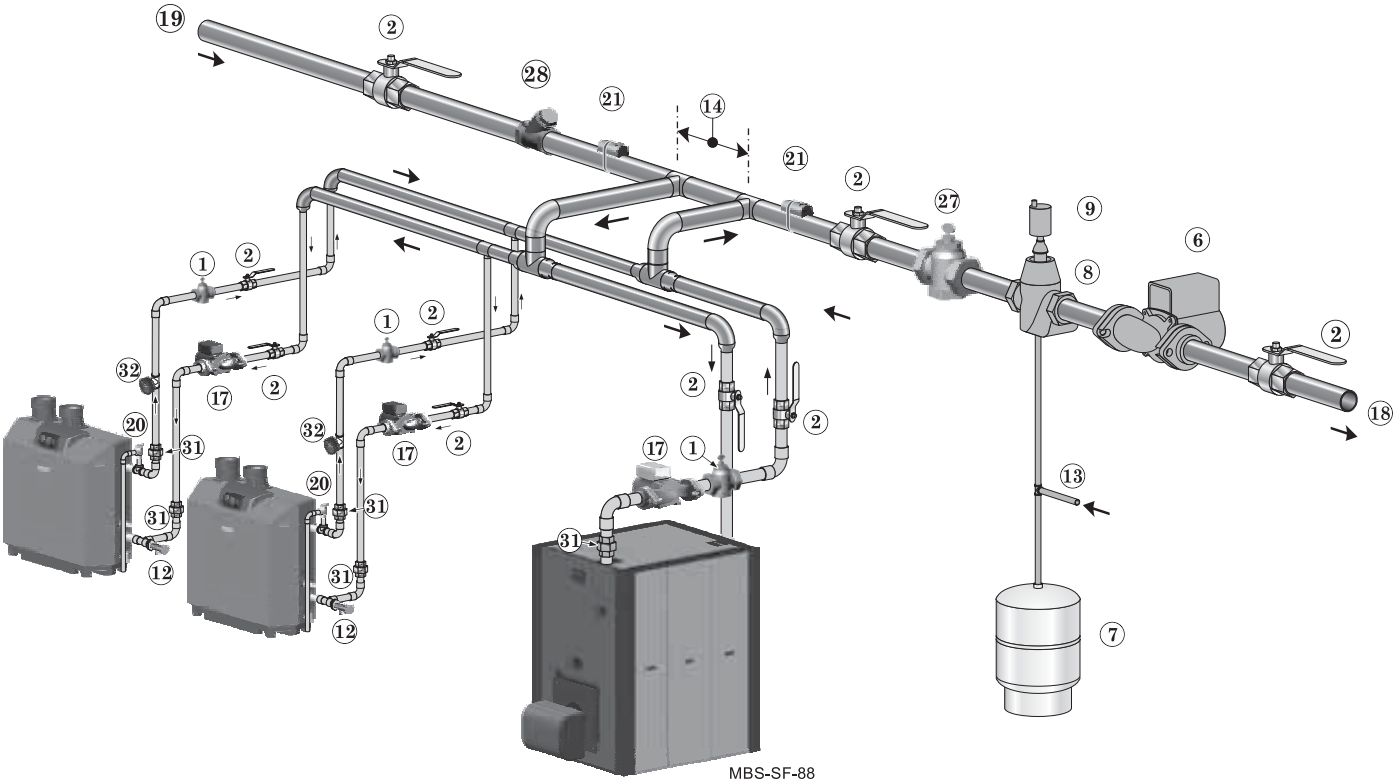

Legend — 15		
1 Flow/check or spring check valve. 2 Isolation valves (when used). 6 Heating system circulator (exchanger tube-side). 7 Expansion tanks (diaphragm type). 8 System air eliminator. 9 System automatic air vent. 12 Boiler drain valves. 13 Cold water supply connections (per applicable codes). 14 Primary/secondary connections (tees no more than eight (8) pipe diameters apart.	17 Boiler circulator — Boiler circulators are piped to pump into the **SlimFit** boiler for best results with the higher pressure drop of the boiler. Boiler circulators on the High Mass boilers are piped to pump away from the boiler. 18 Heating system supply. 19 Heating system return. 20 Boiler relief valve and discharge piping, installed per **SlimFit** boiler manual. All others boiler's relief valves and discharge piping installed per manufacturer's instructions. 21 Strap system supply and return sensors to lines as shown, at least 6 pipe diameters (but no more than 3 feet) from boiler connection tees. For redundancy, you can install multiple sensors, each connected to a different boiler.	27 Flow/check or spring check valves (to prevent induced or gravity flow in heating system or DHW piping). 28 Check valve. 31 Unions. 32 Pressure/Temperature gauge installed on boiler outlet.

Fast-Track Setup — Typical Application D *(cont.)*

WARNING **Boiler Model, Altitude are critical settings.** Failure to set correctly could result in severe personal injury, death or substantial property damage.

Figure 16 Typical Application D — multiple boiler system — setup requirements (parameters not listed below can be left at factory default settings unless special needs indicate different settings)

Boiler Wiring and Control Settings (See Figure 15, page 20 for items referenced)						
Boiler ID	**TT input**	**Wired from:**	**Input Assignment**	**Aux Option**	**Output**	**Wired to: *****
1 Master	1	No Wire	Aux Pump/Output **	Any TT Input By It's Priority Settings **	1	System Circ (Item 5)
	2	Zone 1 Tstat	Priority 3 - Network 2	N/A	2	Zone 1 Circ/Valve
	3	Zone 2 Tstat	Priority 3 - Network 2	N/A	3	Zone 2 Circ/Valve
2 Shadow	1	Zone 3 Tstat	Priority 3 - Network 2	N/A	1	Zone 3 Circ/Valve
	2	Zone 4 Tstat	Priority 3 - Network 2	N/A	2	Zone 4 Circ/Valve
	3	Zone 5 Tstat	Priority 3 - Network 2	N/A	3	Zone 5 Circ/Valve
** System circulator will not be used if system is circulator zoned. Aux Pump/Output would not be required. *** Outputs are 120 VAC maximum 2.2 amps. (Except Boiler Pump Output). Use relay for other voltages or higher amperages.						

Priority Settings					
Priority #	**Setting**	**Value**	**Priority #**	**Setting**	**Value**
Priority 3 – Network 2	System Type	Select heating system type			
	Run Boiler Pump	YES			
	Run Aux Output	YES			
	Additional Heat Demand	ODT			
	ODT Setpoint	As required for application			
	Activate Contact Below Setpoint	1st or 2nd based on system sizing			

System Function Notes:

Combine Weil-McLain condensing boilers and large-mass boilers in one system controlled by the **SlimFit** control. Use condensing boilers during LOW-LOAD periods (spring, fall) and high-mass boilers during HIGH-LOAD periods. The **SlimFit** control will sequence the high mass boiler when needed.

NOTICE Use accepted engineering methods to design this system for desired system efficiency and behavior. Ensure that settings for ODT SETPOINT and ACTIVATE CONTACT BELOW SETPOINT are adjusted to the design conditions of the system for proper operation.

Field wiring *(see wiring diagram, Figure 18, page 32)*

⚠WARNING

ELECTRICAL SHOCK HAZARD — For your safety, turn off electrical power supply at service entrance panel before making any electrical connections to avoid possible electric shock hazard. Failure to do so can cause severe personal injury or death.

NOTICE

The installation must comply with National Electrical Code and any other national, state, provincial or local codes or regulations. In Canada, CSA C22.1 Canadian Electrical Code Part 1, and any local codes.

Wiring must be N.E.C. Class 1. If original wiring as supplied with boiler must be replaced, use only type 105 °C wire or equivalent. Boiler must be electrically grounded as required by National Electrical Code ANSI/NFPA 70 – latest edition.

Do not use 24V from transformer to power any external devices that are not listed in this manual.

Wire entrances

Eight knockouts are provided in the top of the cabinet for line and low voltage wiring. See Figure 17 for locations.

⚠WARNING

Installer MUST use a strain relief through jacket knockouts. Failure to do so can cause severe personal injury, death or substantial property damage.

Wiring overview

See details on the following pages for the wiring connections outlined below:

Required wiring connections

- 120VAC power to boiler; 120VAC power out to boiler circulator; system supply and return temperature sensors.

Connections as needed by systems

- Thermostat, end switch or other inputs for call for heat.
- System zone circulators, valves, relays, etc.
- System circulator, when required.
- Outdoor temperature sensor.

Optional wiring connections

- External limits; proof-of-closure interlocks (combustion air damper, flow switch, etc.); 0–10VDC for target or modulation control; remote alarm; additional heat demand contact; and communication cables for boiler networking and/or building management system interface (MODBUS).

Figure 17 Wire entrances

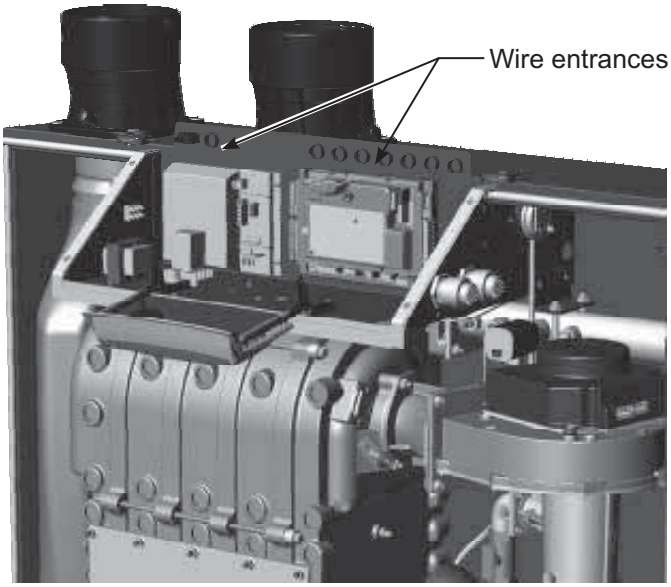

SF-7020

Field wiring *(see wiring diagram, Figure 18, page 32)*

A. 120 VAC Power Supply – REQUIRED

Terminal Block T1 *(control tray, right front)*

1. Boiler line voltage power — Boiler load is 18 amps. Provide and install a fused disconnect or service switch (25- or 30-ampere rated recommended) as required by applicable codes.
2. Connect properly sized **120 VAC** power wiring to **SlimFit** boiler line voltage terminal strip as shown at right.
3. If possible, provide a surge suppressor in the supply power line. This will reduce the possibilities of control damage due to line surges.
4. Must wire ground to this terminal to provide boiler grounding.

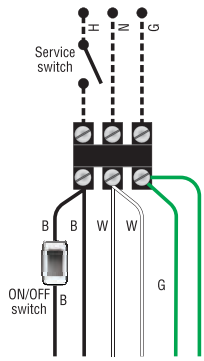

See Figure 18, page 32 for details

B. 120 VAC Outputs 1, 2 & 3 – *On each boiler – As needed for systems*

Terminal Strip P2 *(SlimFit control module, right side)*

1. Output 1: P2 Terminals 1 (H), 4 (N), 7 (G).
2. Output 2: P2 Terminals 2 (H), 5 (N), 8 (G).
3. Output 3: P2 Terminals 3 (H), 6 (N), 9 (G).
4. Maximum load: 2.2 amps (use relay if circulator load is higher). See WARNING below.
5. Each boiler has three outputs (Output 1, Output 2, and Output 3) that provide 120 VAC to the following listed below.
   - A zone circulator.
   - A system circulator.
   - A DHW circulator (used to circulate through an indirect tank).
   - An auxiliary item that must be energized during an input call, such as an air damper.
6. When using inputs/outputs for heat/DHW demands, each input (Input 1, Input 2, and Input 3) controls its respective 120 VAC output (Output 1, Output 2, and Output 3). Outputs are energized only when BOTH conditions below are met:
   a. The corresponding input indicates a call for heat/DHW (i.e., contact closure).
   b. The PRIORITY assigned to the Input/Output pair is ACTIVE (i.e., the zone may be calling but the pump won't activate unless the boiler is currently running on that system/priority).
7. When using the inputs/outputs for the AUX PUMP/OUTPUT function, the output is controlled by selectable conditions set up in the control.
   a. Use the AUX PUMP/OUTPUT function for devices such as system pumps, combustion air dampers, and other auxiliary equipment to activate when the boiler is on/running.
   b. See page 56 and page 57 for more information on the setup and selection of operating conditions.

NOTICE **For Priority DHW Application:**
The DHW aquastat(s) and pumps can be connected to any one of the three input/output pairs.
The selected input should be assigned to LOCAL or P1 if single, PRIORITY 1 if direct piped to the boiler, or NETWORK PRIORITY 1 if located in the system. Set the assignment during the WIZARD setup or manually in the ASSIGN INPUTS menu.

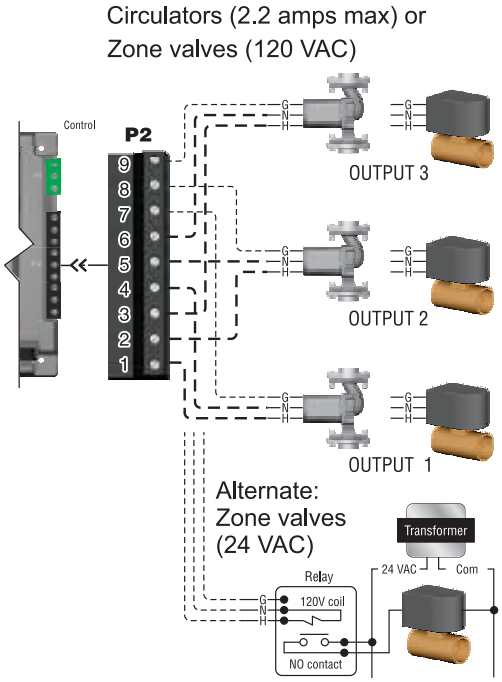

See Figure 18, page 32 for details

WARNING Output circuits are 120 VAC. If an output is to operate a low voltage circuit or must be an isolated contact, use an isolation relay. See example above for 24 VAC zone valves.

WARNING **CIRCULATOR POWER — The maximum allowable current for each circulator is 2.2 amps at 120 VAC.**

For circulators with higher amp ratings, install a circulator relay or starter. Connect only the 120 VAC coil to the **SlimFit** circulator terminals.

Field wiring *(see wiring diagram, Figure 18, page 32)(continued)*

C. 120 VAC to Boiler Circulator – *REQUIRED*

Terminal Strip P8 on Pump/Comm Board *(control tray, left side)*

1. Provides 120 VAC Dry Contact for boiler circulator.
2. Terminals are: 1 (H), 2 (H).
3. Maximum load: 10 amps (use relay if circulator load is higher).
4. Provide and install a fused disconnect or service switch (15-ampere rated recommended) as required by applicable codes for circulator with maximum load of 10 amps.
5. The boiler circulator is used in the boiler loop of the primary / secondary piping. Primary / secondary piping is recommended to be used with the **SlimFit** boiler to ensure proper flow through the heat exchanger.

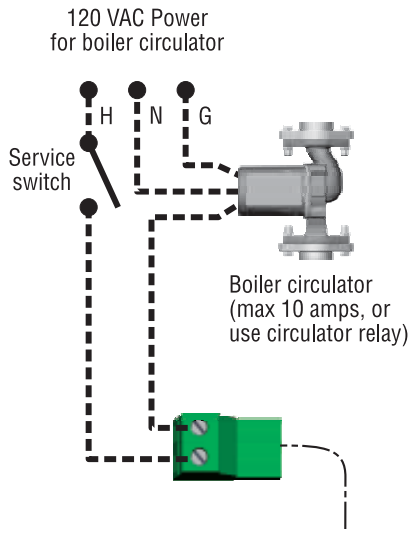

See Figure 18, page 32 for details

Field wiring *(see wiring diagram, Figure 18, page 32)(continued)*

D. 24 VAC Inputs 1, 2 and 3 (tstats, end switches, etc.) – *As needed for systems*

Terminal Strip P11 (input 1) & Terminal Strip P15 (inputs 2 & 3) *(SlimFit control module, left side)*

1. Input 1 – Terminal Strip P11 – 4 & 5 (SlimFit control module)
2. Input 2 – Terminal Strip P15 – 1 & 2 (SlimFit control module)
3. Input 3 – Terminal Strip P15 – 3 & 4 (SlimFit control module)
4. These three inputs on each boiler can indicate a call for heat to the control by means of a dry contact closure (thermostat, aquastat, or switch). (See right and Figure 18, page 32).
5. Each control provides input/output pairs for up to three zones or three systems (priorities). For multiple boiler applications, this is true for each boiler (for eight boilers, total is 3 x 8 or 24).
6. For DHW applications, the aquastat can be connected to one of the three input/output pairs. Wire the DHW circulator to the corresponding output.
   a. For minimum setup steps, take advantage of the factory default settings. Use LOCAL PRIORITY 1 for the DHW circuit if piped directly to the boiler, or NETWORK PRIORITY 1 if the DHW circuit is located in the system as a zone.
   b. For DHW circuits piped as a zone in a system with a system pump, setup the control to run AUX PUMP/ OUTPUT during DHW operation. This can be done during the WIZARD setup process. Note that the input used for AUX PUMP/OUTPUT cannot be used to accept a heat input.

NOTICE DHW circuit in system — For high-demand DHW circuits, the control setting for MIN BOILERS must be set using the NETWORK 1 or NETWORK 2 priority menu after the WIZARD is completed to ensure quick response to demand. See page 53 for a description of the MIN BOILERS setting.

7. The default control setting uses each input (INPUT 1, INPUT 2, and INPUT 3) to control its respective 120 VAC output (OUTPUT 1, OUTPUT 2, and OUTPUT 3).

NOTICE Use of 0–10VDC input for modulation disables INPUT 1 from creating calls for heat. This function can only be set up on single boilers. See page 30 for instructions.

TT or end switch inputs

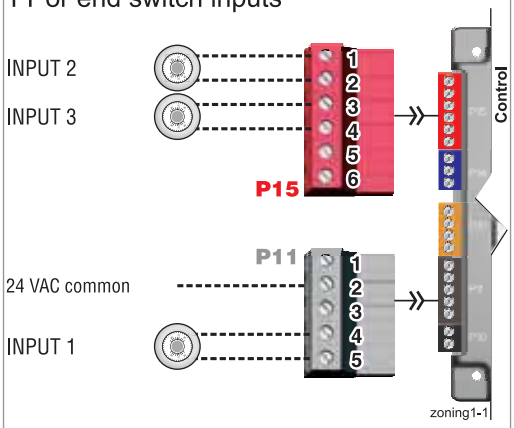

See Figure 18, page 32 for details

WARNING **Thermostats** — **DO NOT** supply 24-volt power to the thermostat circuits (Input1, Input2 and Input3 in Figure 18, page 32) or attempt to supply 24 volts for any other application.

For thermostats that require a continuous 24-volt power source, connect the common wire ("C") to **P11** Pin 2 (see Figure 18, page 32). Do NOT exceed total amp draw per thermostat.

Zone valves — If using 3-wire zone valves, use relays to provide dry contacts to the Control thermostat connections. The zone valve end switches of 3-wire valves carry 24 VAC from the valve.

Thermostat anticipator setting — 0.1 amps.

Field wiring *(see wiring diagram, Figure 18, page 32)(continued)*

E. System supply and return temperature sensors – *REQUIRED*

Terminal Block P14 *(SlimFit control module, left side)*

1. Two strap-on temperature sensors are shipped with each boiler. Attach one to the system supply piping and the other to the system return piping. For piping larger than 5 inch diameter or nonmetallic piping, using immersion sensors will provide faster response. See **SlimFit** boiler manual replacement parts section for available immersion sensors.

NOTICE Preferably, connect outdoor, system supply and system return sensors to more than one boiler to provide redundancy. If one of the sensors fails, the master boiler SlimFit control automatically look for an available sensor.

2. Locate the supply sensor at least six pipe diameters, but no further than 3 feet, downstream from the boiler connection to the main to ensure adequate mixing.
3. Supply sensor – wire between P14 #1 and #2 (common).
4. Return sensor – wire between P14 #3 and #2 (common).
5. Thermostat wire can be used to connect these sensors.
6. The Control compares the system return temperature with the system supply temperature. Should the return temperature ever exceed the supply temperature, the Control knows there is likely a sensor failure and will report this problem on the display.

NOTICE All heating systems shown in this manual require the System Supply and Return sensors to be installed for proper control function. System will not properly provide heat if sensors are not installed according to these instructions.

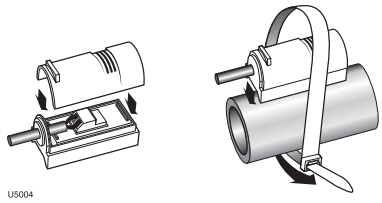

Strap to supply & return piping

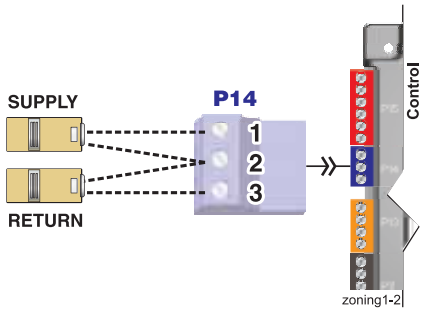

See Figure 18, page 32 for details

F. *Outdoor temperature sensor – REQUIRED unless exempted*

Terminal Block P10 *(SlimFit control module, left side)*

1. The control provides programmable options if using an outdoor temperature sensor. This sensor is supplied with the boiler.
2. Mount the outdoor sensor on an exterior wall, shielded from direct sunlight or flow of heat or cooling from other sources.

NOTICE Preferably, connect outdoor, system supply and system return sensors to more than one boiler to provide redundancy. If one of the sensors fails, the master boiler SlimFit control automatically look for an available sensor.

3. The wire outlet on the sensor must be oriented DOWN to prevent water entry.
4. Connect the sensor leads to the terminal shown at right and in the wiring diagrams (see Figure 18, page 32). Thermostat wire can be used to connect the sensor.

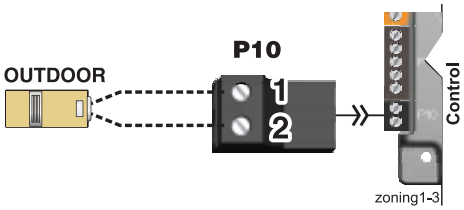

See Figure 18, page 32 for details

Field wiring *(see wiring diagram, Figure 18, page 32)(continued)*

G. External limits – OPTIONAL

To cause **MANUAL** reset: Terminal Block P13 #1 & #2 *(SlimFit control module, left side)*

SlimFit control will require manual reset after circuit is interrupted

1. Remove factory-installed jumper and connect isolated contacts of external limits across P13 pins 1 and 2 to cause the control to enter manual reset lockout if the limit circuit opens. The limit must close and the control must be manually reset using the procedure given in this manual. See drawing at right and wiring diagram (Figure 18, page 32).

NOTICE The control will lockout when a limit in its manual reset circuit opens (P13 pins 1 & 2). The control activates its alarm terminals and shuts the boiler off. An operator (user or technician) must manually reset the control to resume heating. Cycling power on and off will NOT reset the control.

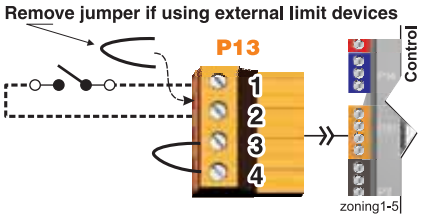

See Figure 18, page 32 for details

To cause **AUTOMATIC** reset: Terminal Block P13 #3 & #4 *(SlimFit control module, left side)*

SlimFit control will reset automatically after circuit is interrupted

1. Remove factory-installed jumper and connect isolated contacts of external limits across P13 pins 3 and 4 to cause the control to shut down the burner on limit opening, then automatically restart 150 seconds after the limit closes.
2. See drawing at right and wiring diagram (Figure 18, page 32).

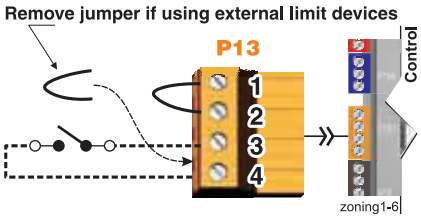

See Figure 18, page 32 for details

H. Alarm contacts – OPTIONAL

Terminal Block P16 #4 & #5 *(SlimFit control module, top left)*

1. The control's alarm dry contact (P16, terminals 4 and 5) closes when the boiler enters manual lockout only.
2. Connect these terminals for remote alarm notification.
3. Contact electrical ratings: 24 VAC or less; 0.5 amp or less.

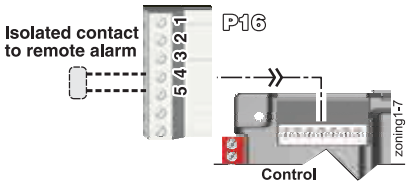

See Figure 18, page 32 for details

Field wiring *(see wiring diagram, Figure 18, page 32)(continued)*

I. Proof of closure (flow switch and/or CAD) – OPTIONAL

Jumper on Terminal Strip P7 *(SlimFit control, bottom left of center)*

1. A flow switch or combustion air damper (CAD) interlock can be configured by clipping the purple wire attached to Pin 3 of P7 such that there is sufficient room to strip ends and connect to field wiring. Strip the jumper ends and wire components as shown at right and in the wiring diagram (Figure 18, page 32).

NOTICE Do NOT clip wires attached to other pins on P7. Only clip purple wire attached to PIN 3. Damaging the other wires will cause boiler fault and will require part repair or replacement.

2. No control settings are required when using a flow switch.
   a. Each boiler is assumed to have its own flow switch, wired as shown at right.
3. To configure the SlimFit control for a CAD interlock:
   a. Assign any INPUT (recommend **INPUT 3**) as a **AUX PUMP/ OUTPUT** function. For multiple boiler applications, use **any input on any boiler in the network**. The example at right demonstrates using **INPUT/OUTPUT 3** on the MASTER boiler.
   b. For the AUX PUMP/ OUTPUT operating mode, select ANY BURNER DEMAND. This ensures the damper will be activated any time any boiler is called on to fire.
   c. Wire the corresponding **OUTPUT** (following recommendation, **OUTPUT 3**) to provide 120 VAC to the damper motor when activated. Use an isolation relay if damper motor requires another voltage or more than 2.2 amps on 120 VAC.
   d. For a multiple boiler system, when any boiler is called on to fire, whether for local or network demand, the combustion air damper will be powered (120 VAC) from the assigned boiler **OUTPUT** as shown at right (using **OUTPUT 3** on the master boiler).

NOTICE The devices used must provide electrically isolated contacts, because the P7 jumper circuit carries 5 VDC.

NOTICE Ensure that the wires are connected only as shown. The **right side of each jumper must connect only to the right side of other jumpers**. Failure to comply will cause incorrect operation of the proof of closure circuits.

4. When a call for heat occurs, the corresponding output(s) energize, and the blower does not activate until the proof of closure switch is closed and conducting electricity. The boiler is given four (4) minutes to close the proof of closure switch. If the switch opens prior to ignition, the timer continues with the blower remaining active. After four (4) minutes, if the closure switch remains open, or if the closure switch opens during burner firing, the control locks out. The fault will clear when the closure switch returns to a closed state. The corresponding output(s) will remain energized in an attempt to close the switch.

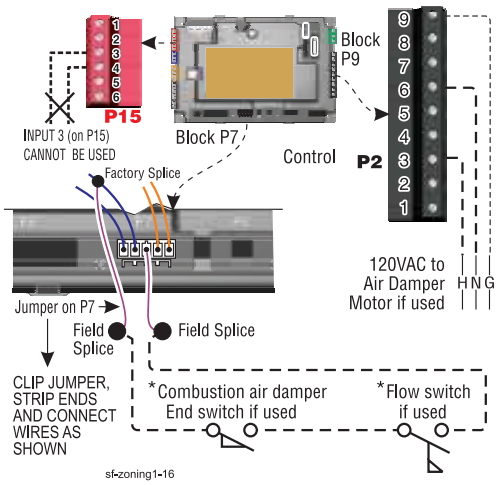

See Figure 18, page 32 for details

Field wiring *(see wiring diagram, Figure 18, page 32)(continued)*

J. 0–10 VDC Remote TARGET input – OPTIONAL

Terminal Block P15 #5 & #6 *(SlimFit control module, left side)*

1. See illustration at right and Figure 18, page 32 (wiring diagram) for details.
2. Remote target using 0–10VDC input requires a 0–10VDC input signal at P15-5/6 as shown at right.
   a. The input positive connection must be at P15 terminal 6 and the common connection at terminal 5.
   b. Using PRIORITY 1, 2, or 3 for single boiler, or LOCAL PRIORITY 1 or LOCAL PRIORITY 2 for a network boiler. **The 0–10VDC input must be to that boiler**.
   c. Using NETWORK PRIORITY 1 or NETWORK PRIORITY 2 for a network boiler. The 0–10VDC input must be made **to the MASTER boiler of the network**.
3. The illustration at right also shows how to connect TT or end switch contacts at INPUT 1, INPUT 2 and INPUT 3 of any boiler.
   a. If the target controller has a heat demand contact, connect it to one of the INPUTs and set up in the WIZARD or manually.
4. The 0–10VDC signal is used to adjust the supply target temperature, using the TARGET ADJUST setting. Set TARGET ADJUST during the WIZARD or manually in the setup menu for the priority chosen.
5. **Suggested 0–10VDC remote target setup for single boiler or a local priority**:
   a. Use PRIORITY 1 (or LOCAL PRIORITY 1) for the DHW heating circuit when used. This priority's default values are set for DHW, direct-connected to the boiler. Verify that settings are suitable for the application, changing if needed.
   b. Use PRIORITY 2 (or LOCAL PRIORITY 2) for the heating circuit that uses the 0–10VDC input.
      - For single boilers, the factory default settings for either of these priorities make them a good choice for space heating applications. Set priority values to the following:
      - Set TARGET ADJUST value to 0–10V.
      - Set VOLTS FOR MAX at the voltage that will call for the highest target temperature. Set SUPPLY MAX at this temperature.
      - Set VOLTS FOR MIN at the voltage that will call for the lowest target temperature. Set SUPPLY MIN at this temperature.
      - For voltages between VOLTS FOR MAX and VOLTS FOR MIN, the target temperature will range proportionately between SUPPLY MAX and SUPPLY MIN.
      - NOTE: The 0–10VDC signal replaces the ODT sensor as the target temperature modifier (TARGET ADJUST setting). The SlimFit control does not control target.
6. **Suggested 0–10VDC remote target setup for a network priority:**
   a. Setup the control as above, but select NETWORK PRIORITY 2 for the heating circuit that uses the 0–10VDC input..
   b. If a local (direct-connected) DHW circuit is used, select LOCAL PRIORITY 1 for DHW. If a DHW circuit in the system is used, select NETWORK PRIORITY 1 for DHW.

TT or end switch inputs
(INPUTS 1, 2, and 3)
With External 0–10VDC input

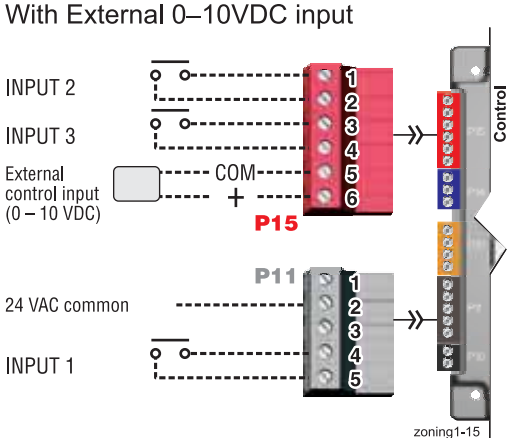

See Figure 18, page 32 for details

Field wiring *(see wiring diagram, Figure 18, page 32)(continued)*

K. 0–10 VDC Remote MODULATION input – OPTIONAL

Terminal Block P15 #5 & #6 *(SlimFit control module, left side)*

WARNING **Using an external multiple boiler controller** — Remote modulation using an external controller only works with each boiler set up as a SINGLE boiler in the SlimFit Control setup.

1. See illustration at right and Figure 18, page 32 for details.
2. This illustration also shows how to connect TT or end switch contacts at INPUT 2 and INPUT 3 for other uses.
3. This function can only be used with a single boiler, NOT for a boiler in a network.
4. Note that using 0–10VDC input disables INPUT 1 as shown at right.
5. Remote modulation requires a 0–10VDC input signal at P15-4/5 as shown at right.
   a. The 0–10VDC input positive connection must be at terminal 6 and common connection at terminal 5.
6. Control setup:
   a. Many options are available for configuring the control. The following is a suggested setup that uses factory default settings as much as possible.
   b. If DHW is required, use PRIORITY 1 to minimize setup steps.
      - Connect the DHW aquastat to INPUT 2 or INPUT 3 and assign the input used to PRIORITY 1.
      - Verify that control settings are suitable for the application, changing if necessary.
   c. Use PRIORITY 2 for the system to be remote modulated.
      - The factory default settings for this priority are best suited for space heating.
      - Assign INPUT 1 to the priority chosen. Accept all defaults for INPUT 1 — no changes should be necessary during the WIZARD.
      - After the WIZARD has been completed, go to the ASSIGN INPUTS menu for INPUT 1. Change SOURCE to 0–10V (default setting is TT1). See page 56 for ASSIGN INPUTS menu information.
7. Operation:
   a. The boiler comes on at 1.9VDC and turns off at 1.8VDC. 2 VDC = 20% input. 10 VDC = 100% input. These voltage settings are not adjustable.
   b. OUTPUT 1 (120 VAC) is activated and deactivated as the boiler is turned on and off. This output is a good choice to operate the system pump.
8. NOTE: The SlimFit control can be configured to use either 0–10VDC for target operation (see previous section) or modulation, **but not both**.

TT or end switch inputs (INPUTS 2, 3)
With External 0–10VDC input

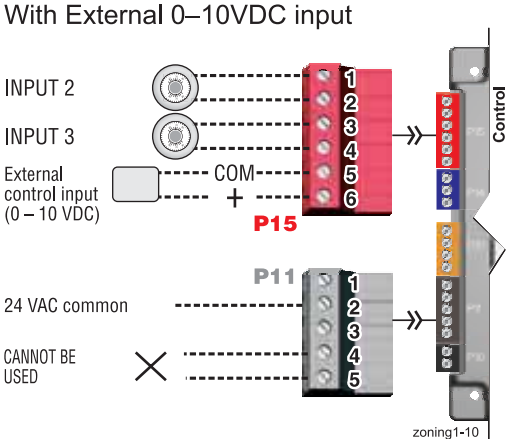

See Figure 18, page 32 for details

L. 120 VAC Power Receptacle

Located on boiler right side panel

1. Electrical rating is 2.0 amps max at 120 VAC.
2. This receptacle can be used to plug in a condensate pump.

Field wiring *(see wiring diagram, Figure 18, page 32)(continued)*

M. Multiple Boiler and BMS Connections

Terminal Strips P11 and P12 on Expansion Module *(control tray, left side)*

1. The boiler control is capable of multiple boiler communication and control of up to eight **SlimFit** boilers in one installation.
2. The expansion module is capable of BMS (Building Management System) communication.
3. See wiring at right and in the wiring diagram (Figure 18, page 32).
4. Use shielded 3-wire cable. Do not exceed 1,000 feet wire length.
5. Boiler to Boiler wiring connections
   a. Connect 3-wire cable between Boiler-to-Boiler OUT (P11-GND,B2,A2) on one boiler to Boiler-to-Boiler IN (P12-GND,B3,A3) on the next boiler.
   b. Continue this wiring until all boilers are interconnected.
6. MODBUS to BMS (Building Management System)
   a. The control is equipped with MODBUS communication to communicate with a BMS.
   b. Use terminal P12 (P12-BMSA,BMSB,GND) to wire to the BMS control.
   c. If the BMS uses BACnet protocol, install a BACnet converter between the BMS and the SlimFit MODBUS-to-BMS terminals (P12).

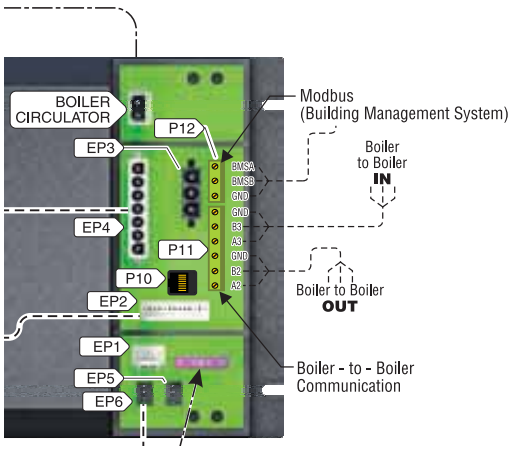

See Figure 18, page 32 for details

N. Additional heat demand contacts – OPTIONAL

Terminal Block P16 Pins #6 & #7 *(SlimFit control module, top left)*

1. Each boiler's control module can be set to activate another heat source using its additional heat demand dry contacts through terminal block P16 pins 6 & 7.
2. Connect these terminals to call for heat from the other heat source.
3. Set the control to activate the heat demand contacts as needed.
4. The setup is done in the priority menu for the priority that will call for the additional heat operation. See page 55 for details.
5. Contact electrical ratings: 24 VAC or less; 0.5 amp or less.
6. See "Add'l Heat Demand" on page 53 regarding which boilers may use this function, depending on the priority being used.

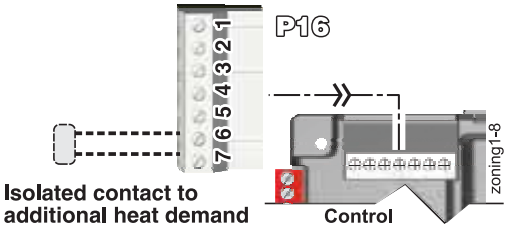

See Figure 18, page 32 for details

O. 0-10 VDC Output Section

Terminal Block P16 Pins #1 & #2 *(SlimFit control module, top left)*

1. The control module can be set to activate another heat source using its 0-10VDC Output through terminal block P16 pins 1 & 2.
2. Connect these terminals to 0-10VDC inputs on another heat source to control its modulation rate.
3. Maximum electrical ratings: 10VDC; 108µ A.
4. Set the control to activate the output as needed.
5. See page 58 to configure.

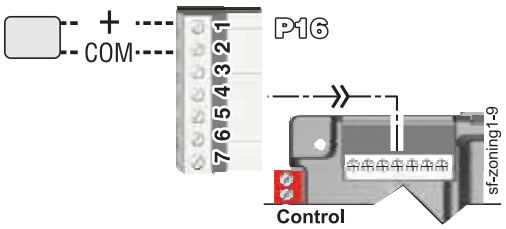

See Figure 18, page 32 for details

Wiring diagram — schematic

Figure 18 SlimFit schematic wiring diagram (see Figure 21, page 36 for legend and notes)

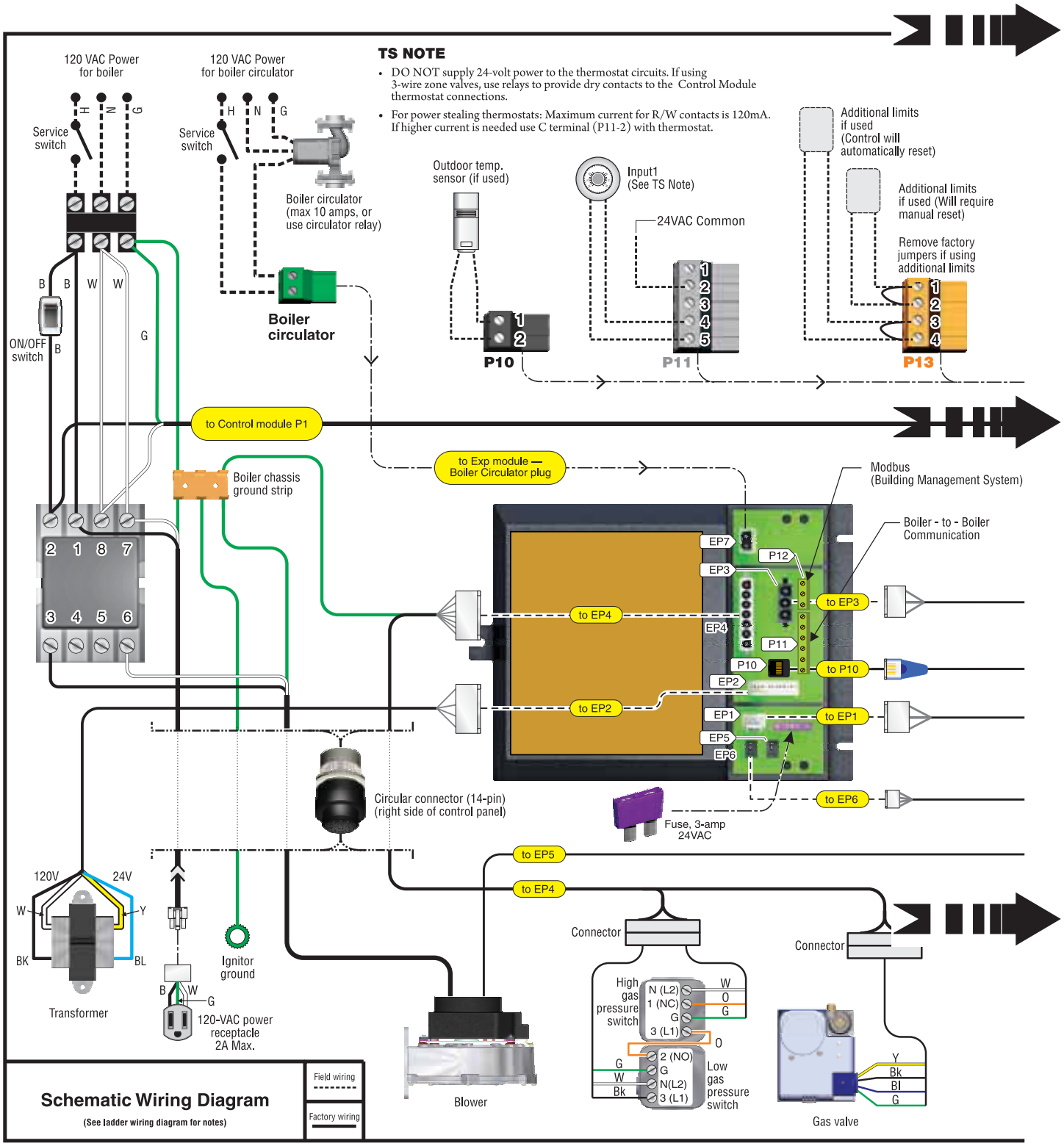

Wiring diagram — schematic *(continued)*

Figure 20 (continued from previous page) **SlimFit** schematic wiring diagram — SF-550 & SF-750

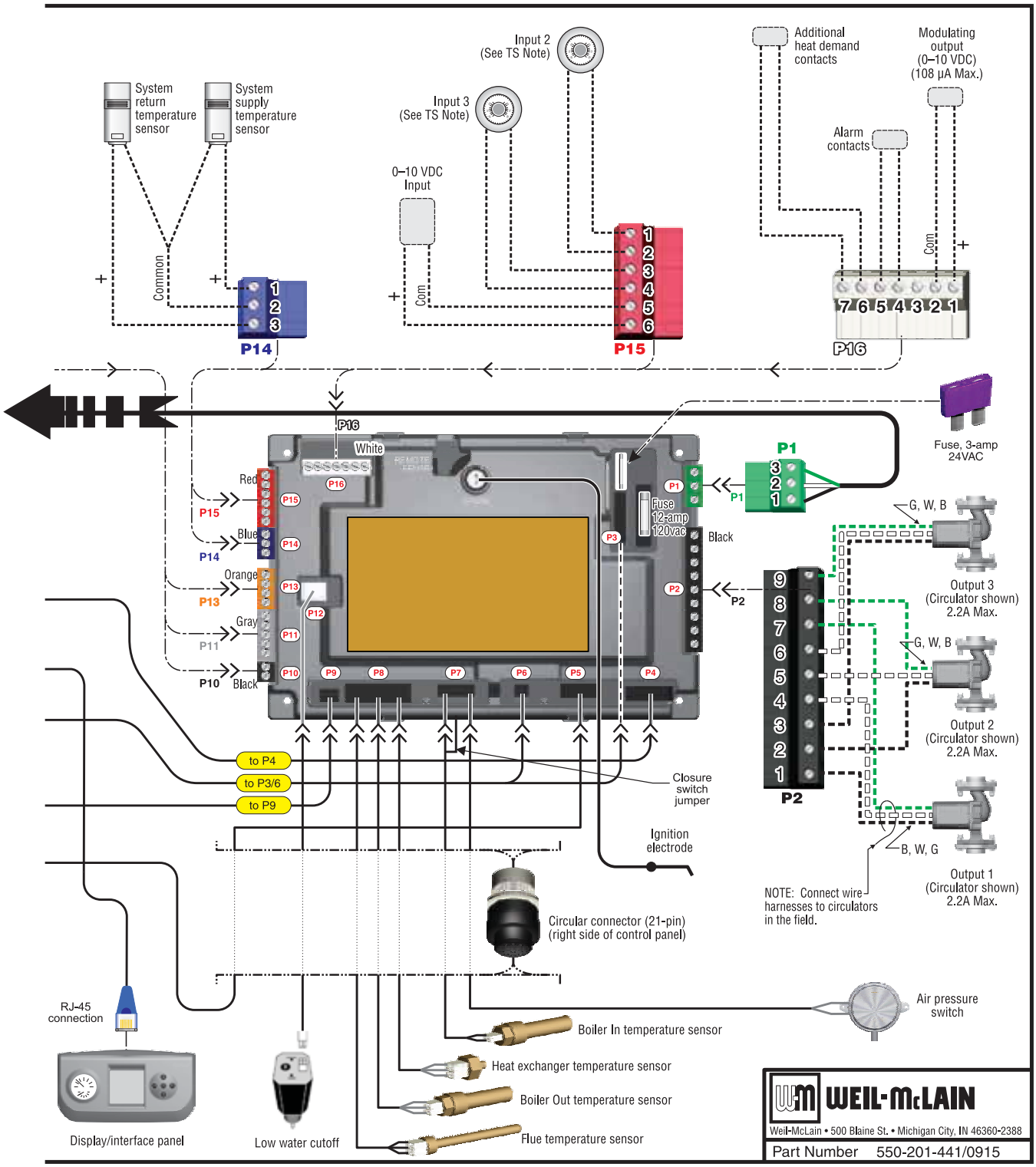

Wiring diagram — ladder

Figure 19 SlimFit ladder wiring diagram (see Figure 18, page 32 for schematic wiring diagram)

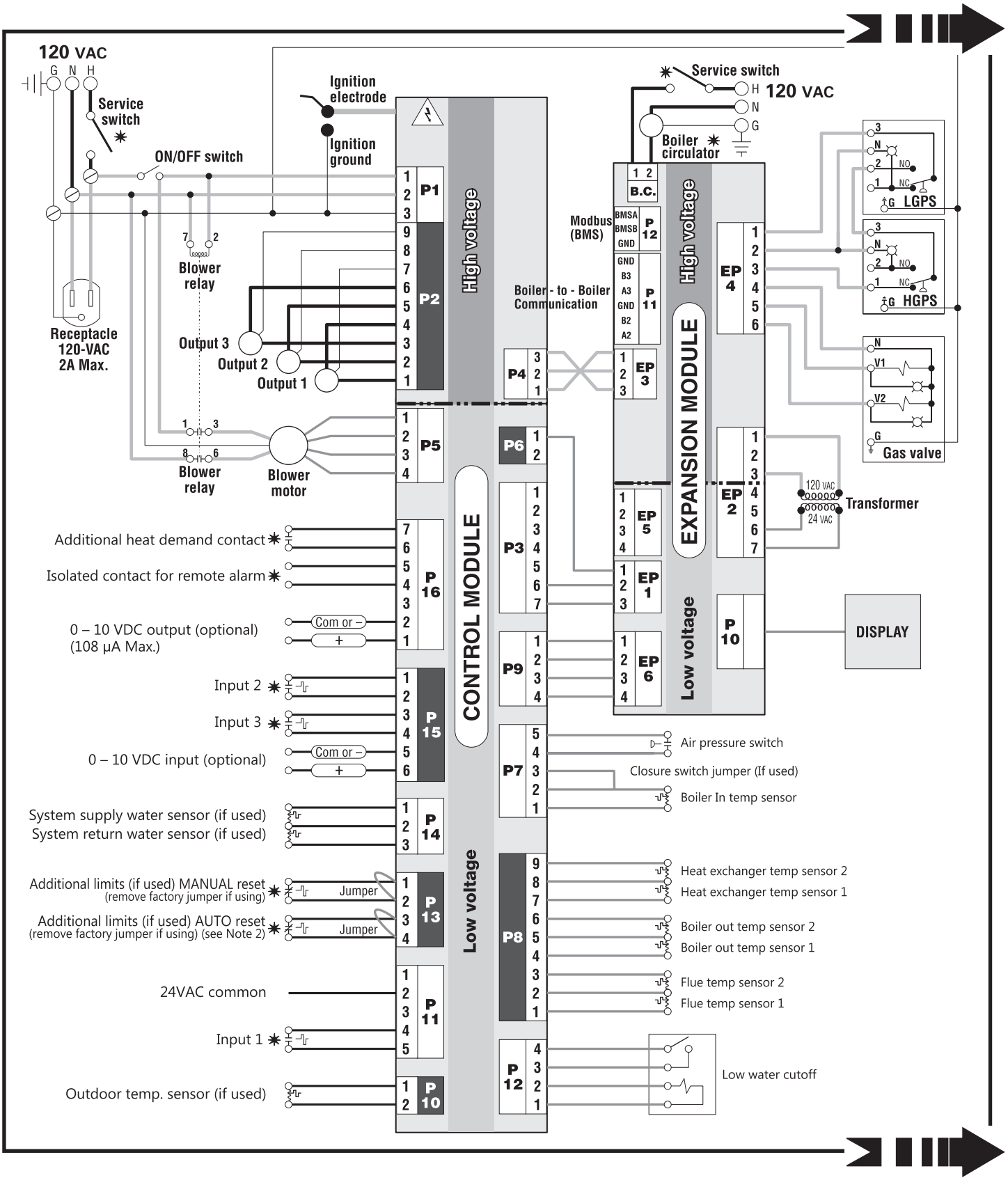

Wiring diagram — ladder *(continued)*

Figure 21 (continued from previous page) **SlimFit** ladder wiring diagram — SF-550 & SF-750

Ladder Wiring Diagram

⚠WARNING

Electrical shock hazard — can cause severe injury or death. Disconnect power before installing or servicing.

NOTICE

All contacts shown without power applied.

✷ Indicates items not provided

Legend for ladder wiring diagram only

- 120 vac field wiring
- Low voltage field wiring
- 120 vac factory wiring
- Low voltage factory wiring
- High voltage spark ignition wiring
- Ground connectors

Notes for Schematic and Ladder Diagrams

1. All wiring must be installed in accordance with:
   U.S.A. — N.E.C. And any other national, state, or local code requirements.
   Canada — C.S.A. C22.1 C.E.C. Part 1 and any other national, provincial, or local code requirements.
2. Connect additional limits (if used) between terminals P13-1 and P13-2 if the boiler control module is to manual reset on limit action. Connect between terminals P13-3 and P13-4 for automatic reset. Remove jumper across terminals used.
3. If any of the original wire as supplied with the appliance must be replaced, use minimum 105 °C wire or equivalent. Exceptions: Ignition lead wire must be obtained from Weil-McLain only.
4. Thermostat anticipator setting (single zone) — set anticipator for 0.1 amps.
5. For multiple zoning, use either zone valves or circulators. Refer to the component manufacturer's instructions and this manual for application and wiring suggestions. Boiler circulator must remain with boiler, and cannot be used for system circulation in any way.
6. Refer to control component instructions packed with the boiler for application information.

WEIL-McLAIN

Weil-McLain • 500 Blaine St. • Michigan City, IN 46360-2388

Part Number 550-201-440/0915

Zoning with the SlimFit Control

A. Zoning with CIRCULATORS, suggested applications

Multiple space heating zones — Optional DHW direct-piped to one or more boilers

1. Review wiring information on page 23 (120 VAC outputs) and page 25 (24 VAC inputs).
2. The configuration at right uses the three input/output pairs of each boiler to receive thermostat (or DHW aquastat) inputs on P11-4/5, P15-1/2, and P15-3/4; and circulator outputs on P2 as shown.
3. Assign as many available input/output pairs in the network as needed for zoning.
4. Individual boilers can be configured to operate direct-piped DHW loads as shown at right. Individual boilers can also be used for other direct-piped loads.
5. Setting the controls for network space heating zones:
   a. Recommended — assign the space heating input/outputs to NETWORK PRIORITY 2. The factory settings default to space heating, reducing the changes needed to set up the controls.
   b. Choose the space heating system type that matches the heating system during the WIZARD setup or manually in the NETWORK PRIORITY 2 menu.
   c. Use the factory default settings for the system type chosen, or change if needed.
6. Setting the controls for individual boiler DHW loads:
   a. Assign the input/output connected to the DHW loop to LOCAL PRIORITY 1, which defaults to settings for DHW.
   b. Verify that settings are acceptable. Change if needed.
7. Factory defaults should work for most other settings not listed above.

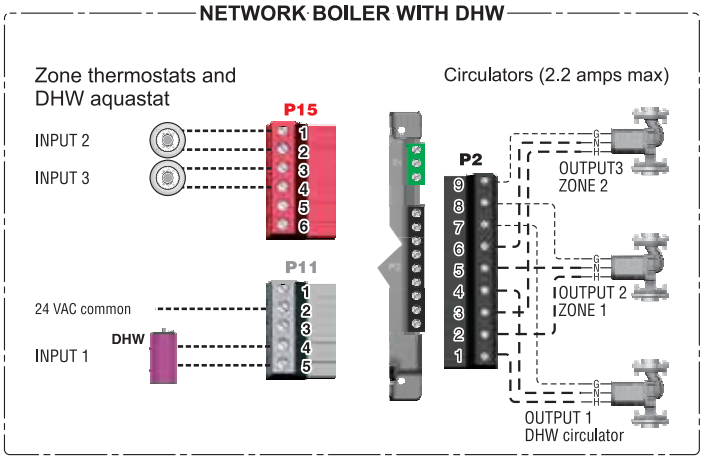

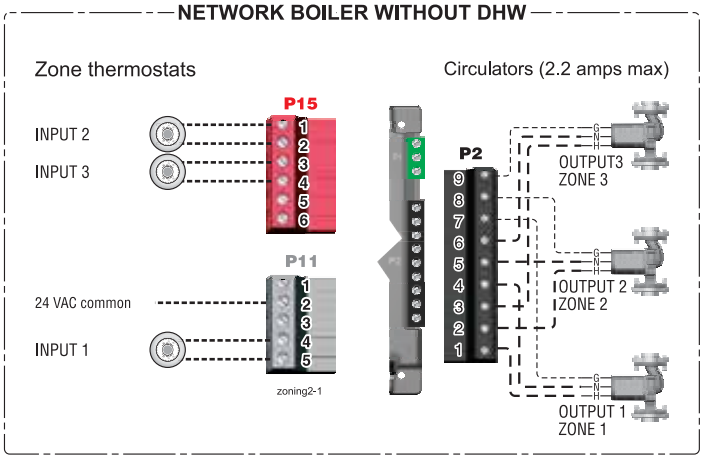

Zoning with the SlimFit Control *(continued)*

B. Zoning with CIRCULATORS, suggested applications

WMCR circulator zone controller plus DHW controlled by boiler, Optional DHW

1. Review wiring information on page 23 (120 VAC outputs) and page 25 (24 VAC inputs).
2. **To shut down space heating during DHW operation**: Provide and connect relay **R1** (120 VAC coil with NC contact) to interrupt the zone controller's ZC-ZR (120 VAC operating circuit).
   a. This is required in all applications where the DHW loop is piped in the system, not directly piped to a boiler. Also, the boiler circulator must be set to operate during DHW calls for system DHW applications.
   b. For local DHW applications (DHW direct-piped to a boiler), this relay is optional. Space heating pumps will operate when called on by the zone controller, but no heat will be delivered to the system — the boiler circulator will not run during DHW heating.
3. This application example provides domestic priority by using the SlimFit control(s).
4. The configuration at right uses INPUT 2 on any boiler for space heating with the call for heat coming from the zone controller (X-X).
5. INPUT 1 is connected to a DHW aquastat.
6. This configuration applies to either a local demand (direct-piped to a single boiler) or a network demand (piped to the main system).
7. Suggested for space heating: Assign INPUT 2 to either LOCAL PRIORITY 2 (direct) or NETWORK PRIORITY 2 (system). To set up the priority, choose the space heating system type that matches the heating system during the WIZARD setup or manually in the priority menu.
8. Suggested for DHW: Assign INPUT 1 to either LOCAL PRIORITY 1 (direct) or NETWORK PRIORITY 1 (system). Wire the DHW circulator to OUTPUT 1. Set the control for boiler pump ON if DHW is network piped. Set the control for boiler pump OFF if DHW is direct-piped to a boiler (local).
9. Use the factory default settings for DHW and for the heating system type chosen, or change if needed. Factory defaults should work for other settings not listed above.

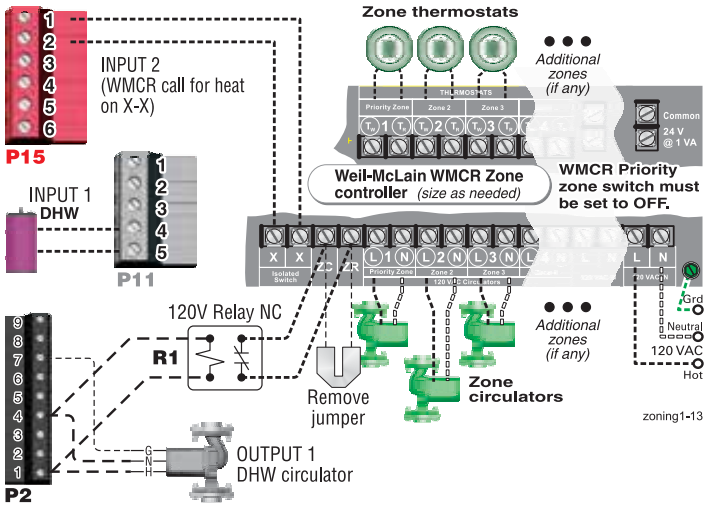

P15, P11, and P2 are terminal strips on the SlimFit control

Relay **R1**, when used, is provided by installer

Zoning with the SlimFit Control *(continued)*

C. Zoning with ZONE VALVES, multiple boilers, suggested applications

(see SlimFit Boiler Manual for single boiler suggested applications)

Multiple space heating zones with direct-piped DHW on one or more boilers (optional)

NOTICE This suggested application only applies to systems with DHW piped directly to individual boilers. For systems with DHW connected to the system other control arrangements may be required.

1. Review wiring information on page 23 (120 VAC outputs) and page 25 (24 VAC inputs).
2. The configurations at right use the three input/output pairs of each boiler (except INPUT/OUTPUT 1 on the boiler wired for system circulator) to receive thermostat (or DHW aquastat) inputs on P11-4/5, P15-1/2, and P15-3/4. The space heating system circulator is connected to OUTPUT 1 (terminals 1, 4, and 7 on P2).
3. Assign as many available input/output pairs in the network as needed for zoning.
4. Setting the controls for network space heating zones:
   a. Recommended — assign the space heating input/outputs to NETWORK PRIORITY 2. The factory settings default to space heating, reducing the changes needed to set up the controls.
   b. Choose the space heating system type that matches the heating system during the WIZARD setup or manually in the NETWORK PRIORITY 2 menu.
   c. Use the factory default settings for the system type chosen, or change if needed.
5. On the boiler that is used for system circulator, assign INPUT 1 to AUX PUMP/ OUTPUT. Then select ANY INPUT BY ITS PRIORITY when prompted for when to activate the output. This will cause the system pump to run when any of the space heating zones calls for heat.
6. Setting the controls for individual boiler DHW loads:
   a. Assign the INPUT that is wired to the DHW aquastat to LOCAL PRIORITY 1, which defaults to settings for DHW.
   b. Verify that settings are acceptable. Change if needed.
7. On the boiler that is used for system circulator, Input 1 cannot be used for a wired connection (as shown in the top right diagram.)
8. Factory defaults should work for other settings not listed above.
9. Wire 24 VAC zone valves as shown below:

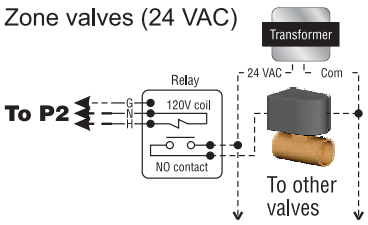

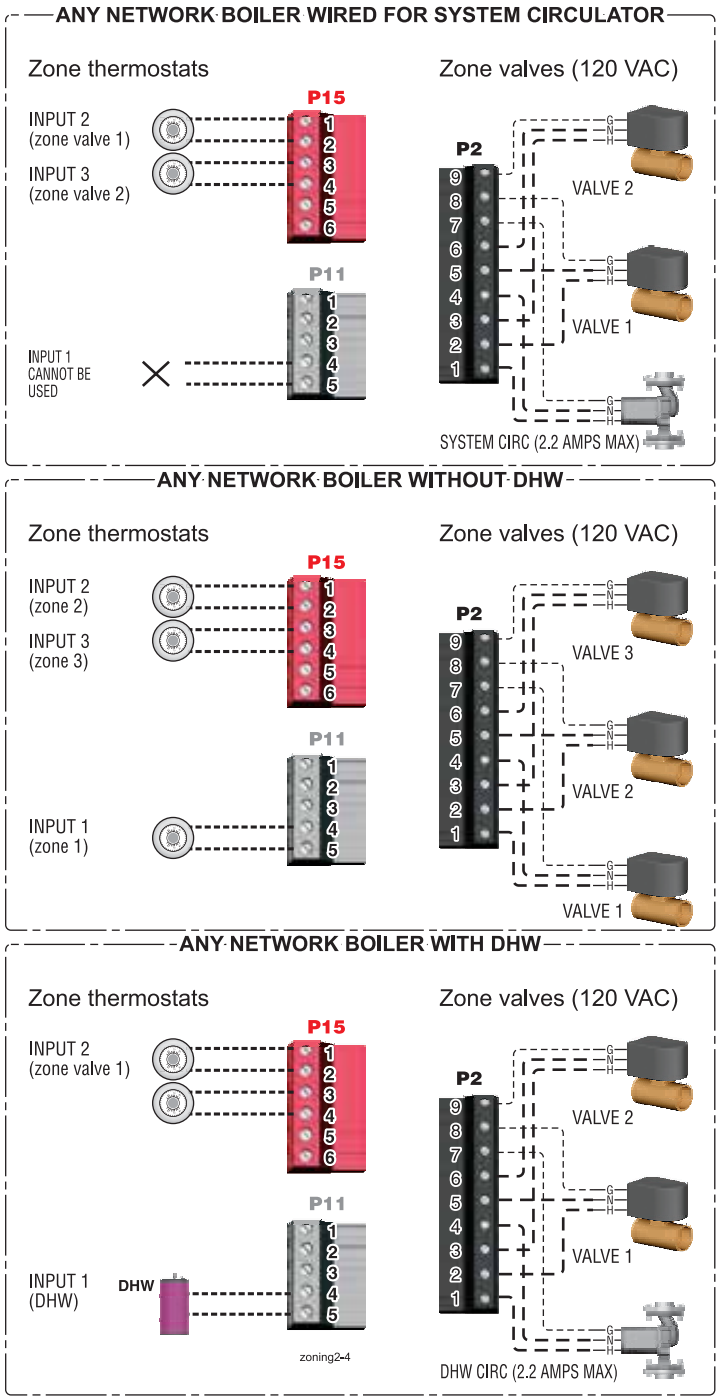

P15, P11, and P2 are terminal strips on the SlimFit control (See wiring at left for 24 VAC zone valves).

Zoning with the SlimFit Control *(continued)*

D. Zoning with ZONE VALVES, multiple boilers, suggested applications

(see SlimFit Boiler Manual for single boiler suggested applications)

WMZV zone valve zone controller plus DHW controlled by boiler, Optional DHW

NOTICE **This suggested application only applies to systems with DHW piped directly to individual boilers**. For systems with DHW connected to the system, other control arrangements may be required.

The wiring shown here will also work for a system as in Typical Application B on page 16. This uses two systems piped in parallel. If the space heating system pump is turned off, no heat is delivered to the space heating loop.

1. Review wiring information on page 23 (120 VAC outputs) and page 25 (24 VAC inputs).
2. This application example provides domestic priority by using the SlimFit control(s). Space heating pumps will operate when called on by the zone controller, but no heat will be delivered to the system — the boiler circulator will not run during DHW heating.
3. The configuration at right uses INPUT 2 on any boiler for space heating with the call for heat coming from the zone controller (X-X).
4. INPUT 1 is connected to a DHW aquastat.
5. This configuration applies to either a local demand (direct-piped to a single boiler) or a network demand (piped to the main system).
6. Suggested for space heating: Assign INPUT 2 to either LOCAL PRIORITY 2 (direct) or NETWORK PRIORITY 2 (system). To set up the priority, choose the space heating system type that matches the heating system during the WIZARD setup or manually in the priority menu.
7. Suggested for DHW: Assign INPUT 1 to LOCAL PRIORITY 1. Wire the DHW circulator to OUTPUT 1. Set the control for boiler pump OFF during DHW calls.
8. Use the factory default settings for DHW and for the heating system type chosen, or change if needed. Factory defaults should work for other settings not listed above.

ANY NETWORK BOILER (WITH DHW OPTION)

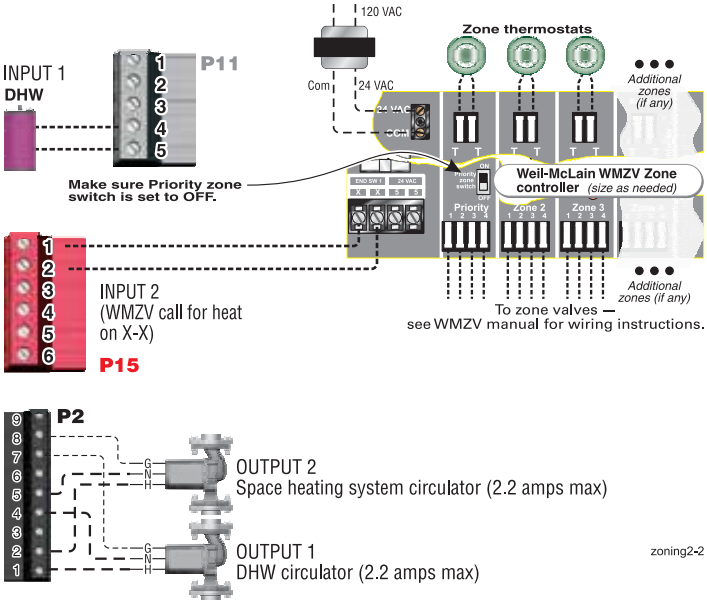

P15, P11, and P2 are terminal strips on the SlimFit control.

SlimFit Control — INITIAL SCREENS

Figure 20 Initial navigation — Accessing CONTRACTOR menus (multiple-boiler screens shown)

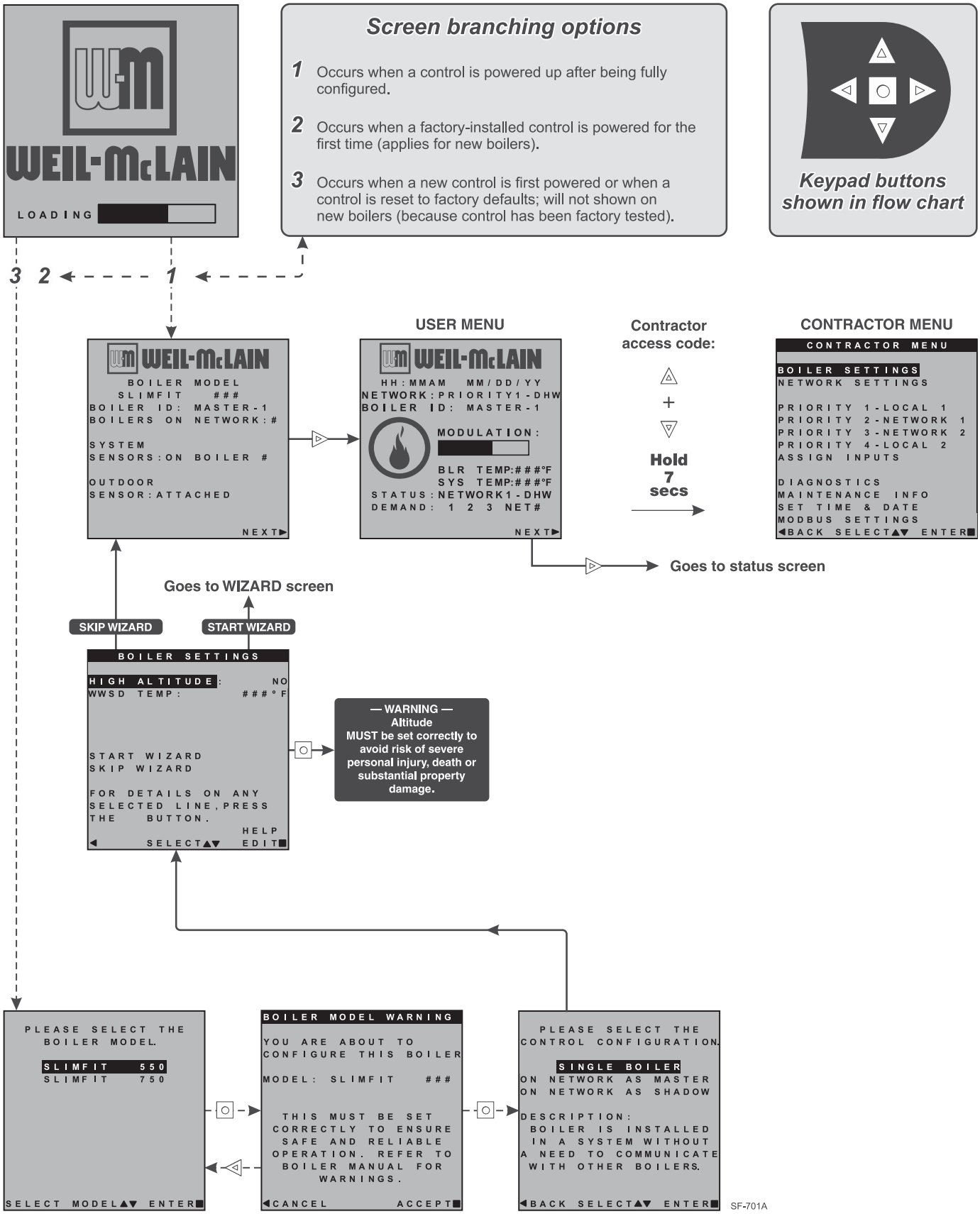

Control operation

Figure 21 Control sequence of operation

Display status text	Control action *(Also see Figure 22, page 42)*
POWER UP	• Check the boiler model listed on the power-up screen. If it is not correct, turn off the boiler. See page 43 for instructions to change setting. • When power is turned on, the screen lists sensors that are detected. If any sensor is not listed, make sure it is connected correctly. Turn off power and restart.
Standby	• Standby - no calls for heat. • Toggles through no dots, 1 dot, 2 dots, then 3 dots while in standby (wrench symbol will show instead if maintenance is needed).
Blower ON	• Call for heat detected. • Display on with BLUE light (space heating) or PURPLE light (DHW). • Start min/max timers if more than one system is calling - highest priority starts first. • Start circulators for this priority based upon settings. • Calculate target temp — If sensor temp is below target temp, begin firing sequence. • Blower to ignition speed for prepurge.
Ignition	• After prepurge times out, begin ignition cycle. • Activate gas valve and ignition spark. • Continue ignition spark for ignition period. • Turn off spark and use electrode to check for flame signal.
Space Heating	• Flame detected. • Release boiler to modulation. • NOTE: If flame is not detected, the gas valve is turned off, blower turns on (postpurge), and control starts cycle again. After 5 failures, the control waits 60 minutes, then tries again. • If priority timer times out, switch to next priority and start priority timer. • If demand satisfied, go to postpurge.
DHW Heating	• Flame detected. • Release boiler to modulation. • NOTE: If flame is not detected, the gas valve is turned off, blower turns on (postpurge), and control starts cycle again. After 5 failures, the control waits 60 minutes, then tries again. • If priority timer times out, switch to next priority and start priority timer. • If demand satisfied, go to postpurge.
Blower OFF	• Demand satisfied (temperature reaches target temperature or limit setting). • Gas valve off. • Blower to ignition speed for postpurge. • Return to standby after purge.
Maintenance	• Display flashes BLUE, toggling between graphic screen and maintenance screen (occurs if maintenance schedule timer times out). • Will show during standby only. • Boiler operates as normal.
Error/fault	• Display turns RED due to error or limit event. • Flashing display means lockout condition.
WWSD	• Warm weather shutdown - the boiler will not be allowed to fire on space heating if the outside temperature is greater than the WWSD setting. • DHW operation is not affected by WWSD.

Control operation *(continued)*

Figure 22 SlimFit control display screens and typical navigation – Advanced mode, multiple boilers

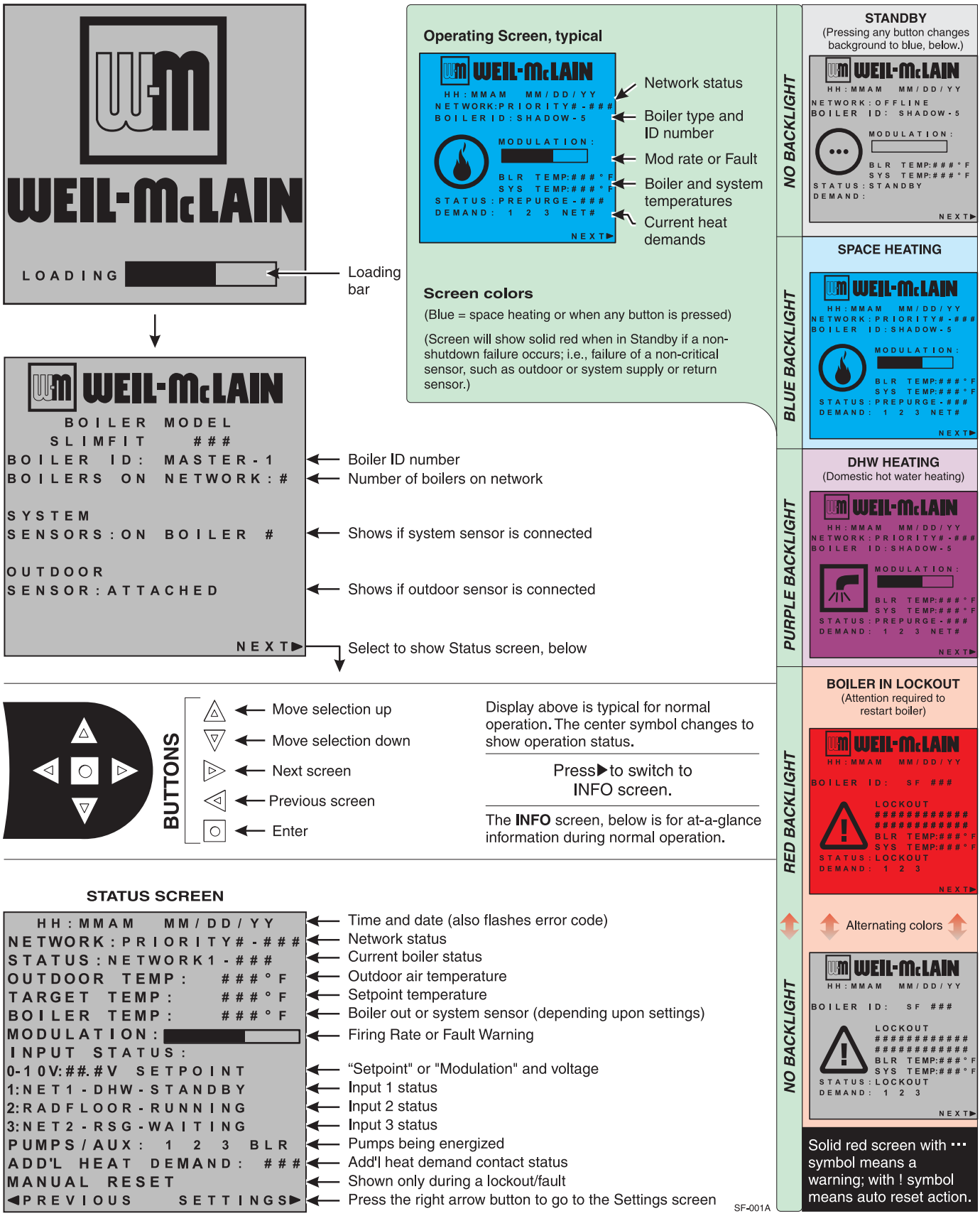

Available control settings – Advance Mode

Figure 23 **SlimFit** control settings available in ADVANCED MODE (see Boiler Manual for BASIC MODE settings)

Menus and Items	Default setting	Range/options
BOILER SETTINGS Menu *(page 47)*		
• **BOILER MODEL**	Factory set	All SlimFit models available
• **CONTROL TYPE**	Single	Single, Master or Shadow
• **HIGH ALTITUDE**	No	Yes or No
• **HIGH LIMIT TEMP**	200°F	50 to 200°F
• **WWSD TEMP**	70°F	OFF, 50–100°F
• **ADJUST OUTDOOR**	0°F	-10 to +10°F
• **CIRCULATOR EXERCISING**	ALL ON	ON or OFF for each circulator
• **FREEZE PROTECT CIRCS**	ONLY BOILER CIRCULATOR ON	ON or OFF for each circulator
• **RESET FACTORY DEFAULT**	—	—
PRIORITY menus *(page 52)*	**Default setting**	**Range/options**
• **INPUTS ASSIGNED**	Varies by priority	1, 2, 3
• **SYSTEM TYPE**	Varies by priority	See Figure 24, page 45 for choices
• **TARGET MOD SENSOR**	Varies	System Supply or Boiler Out
• **TARGET ADJUST**	Varies	None, 0–10V, or ODT
• **SUPPLY MAX**	Varies by system type	60 to 190°F
• **SUPPLY MIN**	Varies by system type	60 to 190°F
• **OD RESET MAX**	70°F	50 to 100°F
• **OD RESET MIN**	0°F	-20 to 50°F
• **VOLTS FOR MAX**	10V	5V-10V
• **VOLTS FOR MIN**	0V	0V-4.9V
• **BOOST TIME**	OFF	OFF, 1 to 240 minutes
• **SYSTEM OFF DIFF**	Varies (5 or 10°F)	2 to 15°F
• **SYSTEM ON DIFF**	10°F	2 to 15°F
• **MAX BLR TEMP**	Equals **SUPPLY MAX**	60 to 190°F
• **ADD BLR DIFF**	5°F	2 to 10°F
• **DROP BLR DIFF**	5°F	2 to 10°F
• **MOD DELAY TIME**	2 minutes	1 to 15 minutes
• **STABILIZE TIME**	5 minutes	3 to 30 minutes
• **ADD DELAY TIMER**	60 seconds	30 to 240 seconds
• **DROP DELAY TIMER**	60 seconds	30 to 240 seconds
• **BOILER ON DIFF**	5°F	2 to 20°F
• **BOILER OFF DIFF**	5°F	2 to 10°F
• **MAX ON TIME**	30 minutes	OFF, 1 to 240 minutes
• **MIN ON TIME**	15 minutes	OFF, 1 to 240 minutes
• **RUN BOILER PUMP**	Varies by system	YES or NO
• **RUN AUX PUMP/OUTPUT**	Varies by system	YES or NO
• **PRE PUMP**	OFF	OFF, 1 to 240 seconds
• **POST PUMP**	30 seconds	OFF, 1 to 240 seconds
• **MAX RATE** *(Local priorities only)*	96%	100% to 21%
• **MIN RATE**	20%	20% to 99%
• **MAX SYS MBH** *(Network priorities only)*	AUTO	AUTO or 100 to 32,000 MBTU's
• **MIN BOILERS** *(Network priorities only)*	1	1 to 8

NOTICE See detailed information about controls settings (parameters) on the following pages.

Available control settings – Advance Mode *(continued)*

Figure 23 SlimFit control settings available in ADVANCED MODE, continued

Menus and Items	Default setting	Range/options
• ACTIVATE CONTACT (ADDITIONAL HEAT DEMAND)	OFF	OFF, 1st, 2nd, ODT
• RESPONSE TIME (ADDITIONAL HEAT DEMAND)	OFF	OFF, 1 to 240 minutes
• MAX RATE VOLTS	10V	5.0V - 10.0V
• MIN RATE VOLTS	2.0V	0.50V - 4.9V
• TEMP DEPENDENT	No	Yes or No
• ODT SETPOINT	15°	0° - 50°
• ACTIVATE CONTACT BELOW SET-POINT:	1st	1st or 2nd
NETWORK SETTINGS *(page 48)*	**Default setting**	**Range/options**
• CONTROL TYPE	—	Single, Master, Shadow
• BOILER ADDRESS	—	1 to 8
• NET MAX ON TIME	30	Off, 1 to 240
• NET MIN ON TIME	15	Off, 1 to 240
• MAX RATE ON NET	96%	100% to 21%
• MIN RATE ON NET	20%	20% to 99%
ROTATION AND SEQUENCE *(page 49)*	**Default setting**	**Range/options**
• SEQUENCE TYPE	Smart	Smart, Parallel, Series
• BASERATE HIGH	Auto	Auto, 20% to 100%
• BASERATE LOW	30%	30% to 100%
• LEAD BOILER ROTATE	Total Hours	Off, By Boiler, Total Hours, Incremental Hours
• ROTATE FREQ	7	1-30, 60, 90, 120, 150, 180, 210, 240, 270, 300, 330, 365
• FORCE LEAD ROTATE	Yes	Yes or No
• CURRENT ORDER	—	Shows current rotation sequence
ASSIGN INPUTS *(page 56)*	**Default setting**	**Range/options**
• INPUT 1	Single boiler – PRIORITY 2 Master or shadow boiler – NETWORK 2	NONE or Single boiler – PRIORITY 1, 2, or 3 Master or shadow boiler – NETWORK PRIORITY 1 or 2 or LOCAL PRIORITY 1 or 2
• INPUT 2	Single boiler – PRIORITY 2 Master or shadow boiler – NETWORK 2	
• INPUT 3	Single boiler – PRIORITY 2 Master or shadow boiler – NETWORK 2	
DIAGNOSTICS *(see Boiler Manual)*		
MAINTENANCE *(page 59)*		
SET DATE AND TIME *(page 59)*		
GAS VALVE TEST		

NOTICE See detailed information about controls settings (parameters) on the following pages.

SYSTEM TYPE presets

Figure 24 System types available (each option provides factory presets for operating parameters)

System Type	8-Character Abbreviation	3-Character Abbreviation	Supply Max °F	Max Blr Temp °F)	OD Reset Min °F	Supply Min °F	OD Reset Max °F	Run Boiler Pump	Run System Pump/Aux
Fan-coil	FAN-COIL	FCL	180	180	0	140	70	YES	YES
Finned Tube Baseboard	FIN BASE	FTB	180	180	0	130	70	YES	YES
Cast Iron Baseboard	IRONBASE	CIB	180	180	0	120	70	YES	YES
Cast Iron Radiators	RADIATOR	CIR	180	180	0	120	70	YES	YES
Radiant - slab on grade	RAD SLAB	RSG	120	120	0	80	70	YES	YES
Radiant - thin slab	RAD SLAB	RTS	140	140	0	80	70	YES	YES
Radiant - below floor (staple up)	RADFLOOR	RSU	160	160	0	90	70	YES	YES
Radiant - above floor (sleeper system)	RADFLOOR	RAF	140	140	0	90	70	YES	YES
Domestic Hot Water	DOMESTIC	DHW	180	180	N/A	N/A	N/A	NO	NO
Custom (user defined)	XXXXXXXX (user input)	first three of user input	180	180	0	70	70	YES	YES

CONTRACTOR menus

WARNING **Boiler Model, Altitude are critical settings.** Failure to set correctly could result in severe personal injury, death or substantial property damage.

1. Access contractor menus by pressing and holding the UP and DOWN arrow keys at the same time for 7 seconds.
2. See the following pages for explanations of control setting options.

Figure 25 **SlimFit** control menu access — accessing CONTRACTOR menu

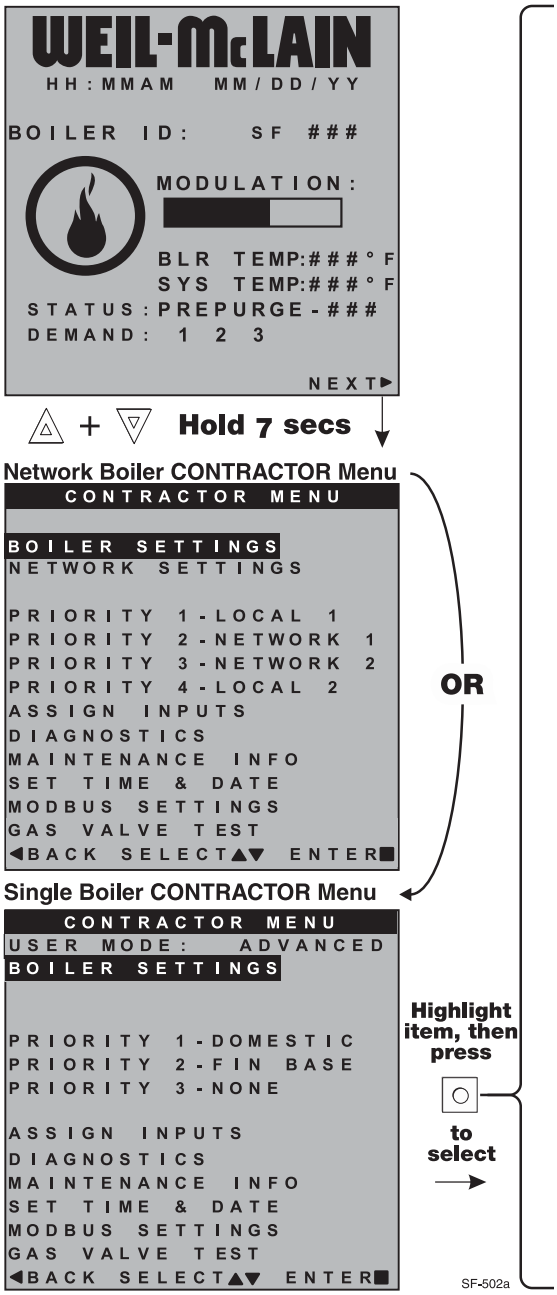

MENU ITEM	PURPOSE	More information
USER MODE	• Set this to ADVANCED to access single boiler advanced settings. ADVANCED mode is automatic if configuring network boilers.	
BOILER SETTINGS	• Set/change boiler model, control type, high altitude setting, gas type (L.P.), ODT sensor requirement, manual reset, high limit and WWSD temperature settings, outdoor sensor temp adjustment, circulator exercising, freeze protection setup, and restore to factory default option.	See page 47
PRIORITY 1 (LOCAL PRIORITY 1)	• These settings control operating temperatures and behaviors for inputs that are assigned to PRIORITY 1.	See page 52
PRIORITY 2 (NETWORK PRIORITY 1 or LOCAL PRIORITY 2)	• These settings control operating temperatures and behaviors for inputs that are assigned to PRIORITY 2.	See page 52
PRIORITY 3 (NETWORK PRIORITY 2 or LOCAL PRIORITY 3)	• These settings control operating temperatures and behaviors for inputs that are assigned to PRIORITY 3.	See page 52
PRIORITY 4 (LOCAL PRIORITY 2)	• Appears only on multiple boiler systems. • These settings control operating temperatures and behaviors for inputs that are assigned to PRIORITY 4.	See page 52
ASSIGN INPUTS	• These settings assign Priority 1, 2, 3 or 4 to each of the three inputs to the control.	See page 56
DIAGNOSTICS	• View error counters and historical information including previous lockouts. • View current status of temperatures, inputs, outputs and runtimes; View network information; View MODBUS communication info; View software versions; Access manual test mode screen; Initiate manual reset.	See Boiler Manual
MAINTENANCE INFO	• Used to set contractor contact information, boiler information and maintenance dates.	See page 59
SET TIME & DATE	• Use to set date and time — important since fault occurrences are date/time stamped.	See page 59
MODBUS SETTINGS	• Use to enter Modbus communications information (enable/disable, range, parity and stop bits, and baud rate). • For Modbus addressing information, see SlimFit Modbus Supplement.	See SlimFit MODBUS Supplement
GAS VALVE TEST	• Use to enable/disable gas valve relay 1 and 2 for troubleshooting purposes.	

Screens shown above are typical only. Actual screens depend on control settings chosen.

BOILER SETTINGS menu

WARNING **Boiler Model, Altitude are critical settings.** Failure to set correctly could result in severe personal injury, death or substantial property damage.

1. Access contractor menus by pressing and holding the UP and DOWN arrow keys at the same time for 7 seconds.
2. See Figure 25, page 46 for the screen sequences up to the CONTRACTOR menu.

Figure 26 SlimFit ADVANCED mode BOILER SETTINGS options (see Figure 25, page 46 to access CONTRACTOR menu)

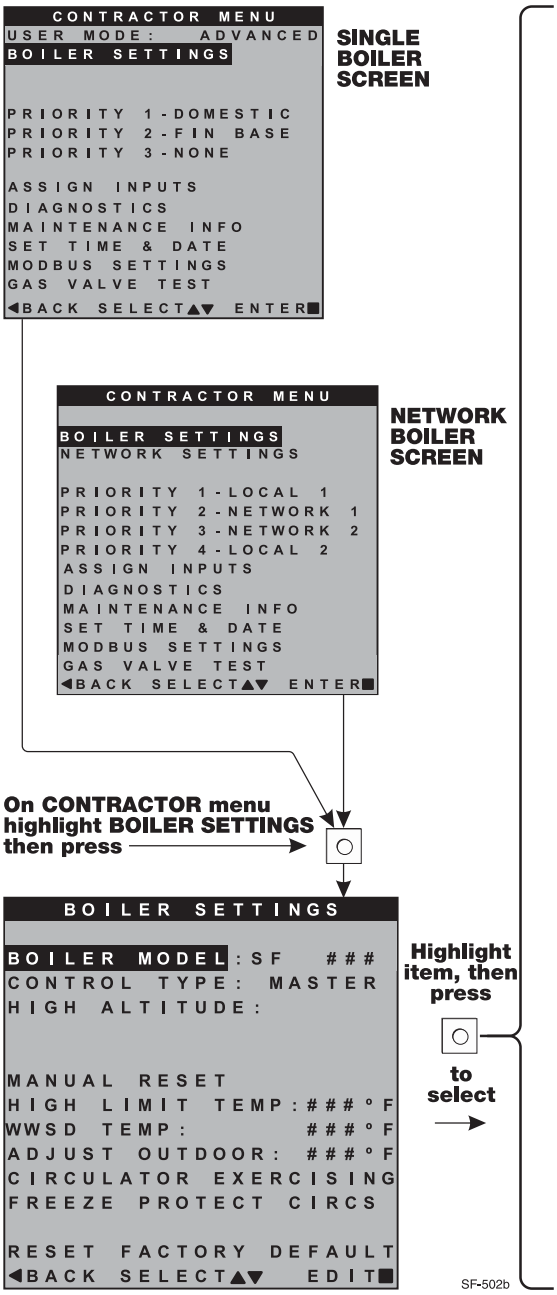

MENU ITEM	DESCRIPTION
BOILER MODEL	• WARNING MUST be set to correct model. • Check the boiler model against the model listed on the boiler's rating plate. Change the selection to the correct model if not. Also verify the model number on the **SlimFit** control display at power-up. Failure to correct would result in severe personal injury, death or substantial property damage.
CONTROL TYPE	• Select single, master or shadow.
HIGH ALTITUDE	• WARNING MUST be set to correct value if altitude over 2,000 feet
MANUAL RESET HIGH LIMIT TEMP	• If boiler outlet water temperature exceeds this temperature, the **SlimFit** control will shut down the boiler and enter lockout. Changing this setting is NOT recommended.
WWSD TEMP	• WWSD stands for warm weather shutdown. It means the boiler will not be allowed to fire if the outside temperature is greater than the WWSD setting. When the boiler is kept off because the outside temperature is above WWSD, the graphic display will show WWSD, and the boiler will remain in standby until the outside temperature drops below WWSD temperature. WWSD does not apply to DHW systems. The outdoor sensor must be installed to use this function. Any setting other than OFF will cause the control to look for a sensor. It will display an error if a sensor is not detected.
ADJUST OUTDOOR	• Use this setting to calibrate the outdoor sensor when needed to compensate for variations in lead length or other factors that could affect total resistance in sensor circuit.
CIRCULATOR EXERCISING	• For each circulator, select whether you want the control to automatically start the circulator and run for 10 seconds for each 72-hour period of inactivity.
FREEZE PROTECT CIRCS	• This function automatically starts the circulators chosen if the heat exchanger sensors detect a temperature less than 45°F. In addition, the burner is turned on if temperature drops below 40°F. Circulators and burner turn off when the temperature rises above 48°F.
RESET FACTORY DEFAULTS	• Use this function to restore all control settings to factory default values — will require complete restart and setup of control after resetting. Record information from the MAINTENANCE screen and any history information that may be of use in the future. ALL stored data is eliminated when reset to defaults, except for boiler model number.

Screens shown above are typical only. Actual screens depend on control settings chosen.

NETWORK SETTINGS menu

WARNING **Boiler Model and Altitude are critical settings.** Failure to set correctly could result in severe personal injury, death or substantial property damage.

1. Access contractor menus by pressing and holding the UP and DOWN arrow keys at the same time for 7 seconds.
2. See Figure 25, page 46 for the screen sequences up to the CONTRACTOR menu.

Figure 27 SlimFit NETWORK SETTINGS menu (see Figure 25, page 46 to access CONTRACTOR menu)

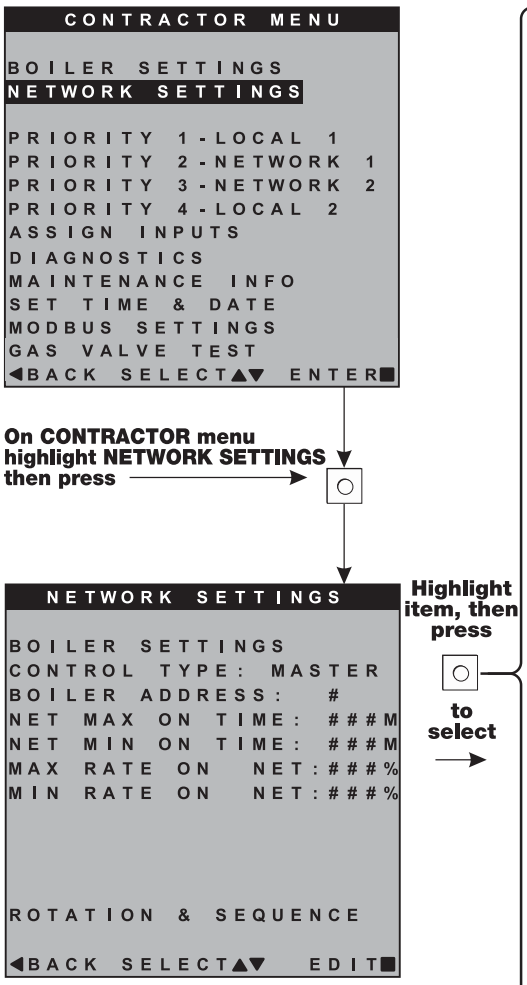

MENU ITEM	PURPOSE	More information
CONTROL TYPE	• SINGLE, MASTER or SHADOW • If another boiler has already been selected as master, a notice window will appear if MASTER is selected here.	None
BOILER ADDRESS	• Network address of boiler (can be changed here if desired, but every boiler must have a unique address).	None
NET MAX ON TIME	• Maximum amount of time this boiler will operate on a network call for heat from the Master boiler before switching to a LOCAL PRIORITY 2 demand (if no LOCAL PRIORITY 1 demand is present).	None
NET MIN ON TIME	• Minimum amount of time this boiler will operate on a network call for heat from the Master boiler before switching to a LOCAL PRIORITY 1 demand.	None
MAX RATE ON NET	• Maximum rate the boiler will run at during NETWORK calls.	None
MIN RATE ON NET	• Minimum rate the boiler will run at during NETWORK calls.	None
ROTATION & SEQUENCE	• Select the method by which the boilers will turn on and off. • Choose between SMART, PARALLEL, or SERIES. (This setting is only accessible on Master boiler.)	See Figure 29, page 50 for explanation of sequencing options

Screens shown above are typical only. Actual screens depend on control settings chosen.

ROTATION AND SEQUENCE

WARNING **Boiler Model, Altitude are critical settings.** Failure to set correctly could result in severe personal injury, death or substantial property damage.

1. Access contractor menus by pressing and holding the UP and DOWN arrow keys at the same time for 7 seconds.
2. See Figure 25, page 46 for the screen sequences up to the CONTRACTOR menu.

Figure 28 SlimFit NETWORK SETTINGS menu (see Figure 25, page 46 to access CONTRACTOR menu)

```
CONTRACTOR MENU

BOILER SETTINGS
NETWORK SETTINGS

PRIORITY 1-LOCAL 1
PRIORITY 2-NETWORK 1
PRIORITY 3-NETWORK 2
PRIORITY 4-LOCAL 2
ASSIGN INPUTS
DIAGNOSTICS
MAINTENANCE INFO
SET TIME & DATE
MODBUS SETTINGS
GAS VALVE TEST
◀BACK SELECT▲▼ ENTER■
```

Highlight NETWORK SETTINGS, then press

```
NETWORK SETTINGS

BOILER SETTINGS
CONTROL TYPE: MASTER
BOILER ADDRESS: #
NET MAX ON TIME: ###M
NET MIN ON TIME: ###M
MAX RATE ON NET:###%
MIN RATE ON NET:###%

ROTATION & SEQUENCE

◀BACK SELECT▲▼ EDIT■
```

Highlight ROTATION AND SEQUENCE, then press

```
BOILER SEQUENCING
SEQUENCE TYPE:
                SMART

BASERATE HIGH: ###%
BASERATE LOW: ###%

LEAD BOILER ROTATE:
    INCREMENTAL HOURS
  ROTATE FREQ:##DAYS
FORCE LEAD ROTATE:YES

CURRENT ORDER:
  #-#-#-#-#-#-#-#

◀BACK SELECT▲▼ EDIT■
```

SF-502c

MENU ITEM	PURPOSE
SEQUENCE TYPE	• Select the method of which the boilers will turn on and off. Choose between SERIES, PARALLEL, or SMART. SERIES sequencing allows each boiler to reach full input before bringing on the next boiler in sequence. PARALLEL sequencing uses a limiter, called BASERATE HIGH, to limit the firing rate before adding additional boilers. SMART sequencing (factory default setting) uses a low firing rate setting, called BASERATE LOW, to keep boilers at a low firing rate, bringing on additional boilers at reduced rate until all boilers are on if necessary. Boilers are then allowed to modulate together as high as necessary to meet demand.
BASERATE HIGH	• This sets highest modulation rate before turning on the next boiler. • This is read-only if in SMART mode.
BASERATE LOW	• This sets rate that the next boiler in sequence is going to turn on when called. • This is only visible if the Sequence Type is selected as SMART. • It is recommended that Baserate Low be set at least 10% greater than the Min Rate of any boiler on the network.
LEAD BOILER ROTATE	• Choose how to rotate the boiler sequencing. Choose either OFF, BY BOILER ID, TOTAL HOURS, or INCREMENTAL HOURS. Firing sequence is changed every rotation period (ROTATE FREQ – see setting explanation below).
	• OFF — Master boiler is always the first to fire. Others fire in the order of their network ID.
	• BY BOILER ID — Lead boiler toggles in the sequence of network ID numbers (changes from boiler number 1 to number 2, then boiler number 2 to number 3, etc.).
	• TOTAL HOURS — The boiler with the most ***lifetime*** operating hours is moved to the last in the firing sequence. The boiler with the least ***lifetime*** operating hours is made first in the sequence. Others are ordered by their respective ***lifetime*** operating hours.
	• INCREMENTAL HOURS — Firing sequence is based on the operating time ***during the previous rotation period***. The boiler with the least operating time is started first; the boiler with the most operating time is started last; all others are started in order of their operating time.
ROTATE FREQ	• Recalculates the boiler order every ## days based on LEAD BOILER ROTATE setting.
FORCE LEAD ROTATE	• Select YES or NO. When the rotation frequency timer expires and the new order is calculated, this forces off the boiler lowest in the sequence. Then the boiler highest in the sequence fires to replace it.
CURRENT ORDER	• Shows the current firing order of the boilers on the network. • This list updates based on how many boilers are detected and the order of sequence based on the above settings. • Sequence is shown as left-most boiler is first to turn on. Right-most boilers are the first to turn off.

Screens shown above are typical only. Actual screens depend on control settings chosen.

ROTATION AND SEQUENCE *(continued)*

Figure 29 SlimFit sequencing options — SMART, PARALLEL or SERIES (examples shown for 3-boiler network)

SERIES Sequencing	PARALLEL Sequencing	SMART Sequencing
← Higher Part-Load Efficiency →		
← Quicker Boiler Response Time →		
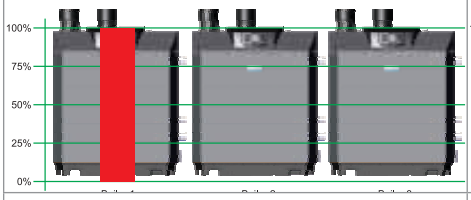	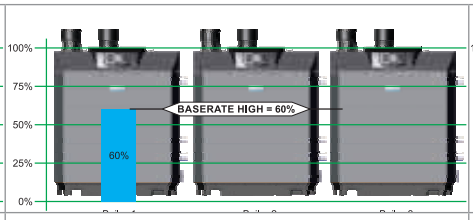	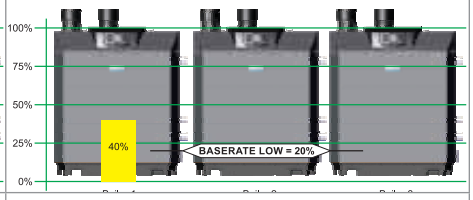
STAGE 1 – Lead boiler modulates up to a maximum of 100% before turning on the next boiler in the sequence. The STABILIZE TIME allows time for the boilers to modulate to meet system demand before turning on additional boilers.	STAGE 1 – Lead boiler modulates up to a maximum of Base Rate High before turning on the next boiler in the sequence. The STABILIZE TIME allows time for the boilers to modulate to meet system demand before turning on additional boilers.	STAGE 1 – Lead boiler modulates up to a low firing rate before turning on the next boiler in the sequence. The STABILIZE TIME allows time for the boilers to modulate to meet system demand before turning on additional boilers.
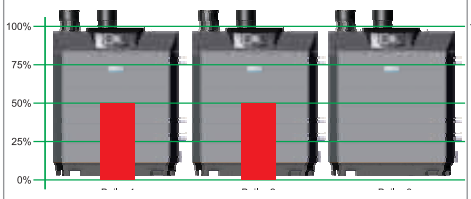	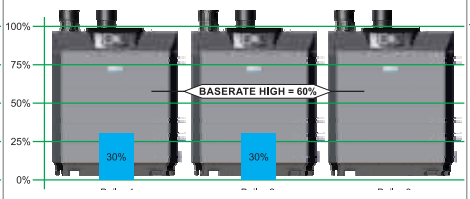	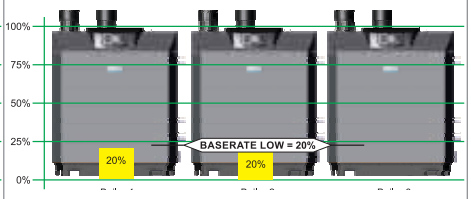
STAGE 2 – Boiler #2 in sequence ignites and both boilers modulate to so their combined energy output matches the energy output of Boiler #1 at 100%. After a short MOD DELAY TIME, the boilers will be released to modulate.	STAGE 2 – Boiler #2 in sequence ignites and both boilers modulate to so their combined energy output matches the energy output of Boiler #1 at Base Rate High. After a short MOD DELAY TIME, the boilers will be released to modulate.	STAGE 2 – Boiler #2 in sequence ignites and both boilers modulate to BASE RATE LOW. After a short MOD DELAY TIME, the boilers will be released to modulate.
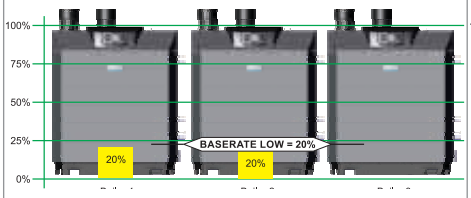	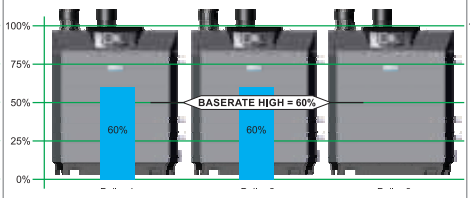	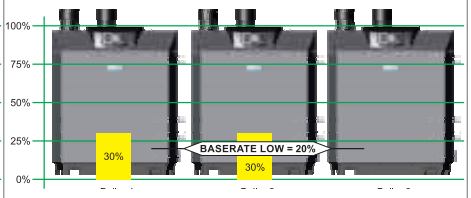
STAGE 3 – Both boilers modulate up to a maximum of 100% before turning on the next boiler in the sequence. The STABILIZE TIME allows time for the boilers to modulate to meet system demand before turning on additional boilers.	STAGE 3 – Both boilers modulate up to a maximum of Base Rate High before turning on the next boiler in the sequence. The STABILIZE TIME allows time for the boilers to modulate to meet system demand before turning on additional boilers.	STAGE 3 – Both boilers modulate up to a low firing rate before turning on the next boiler in the sequence. The STABILIZE TIME allows time for the boilers to modulate to meet system demand before turning on additional boilers.
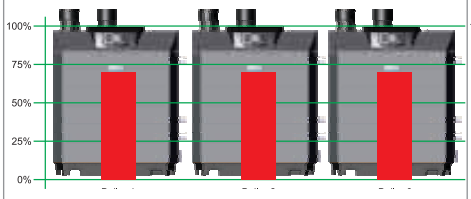	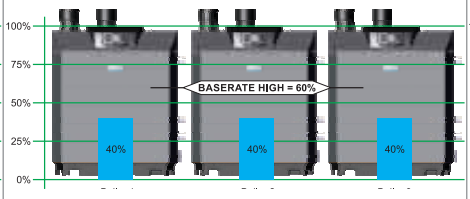	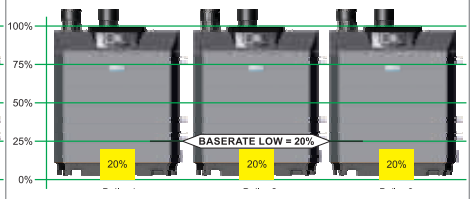
STAGE 4 – Boiler #3 in sequence ignites and then all boilers modulate to so their combined energy output matches the energy output of Boilers #1 and #2 at 100%. After a short MOD DELAY TIME, the boilers will be released to modulate.	STAGE 4 – Boiler #3 in sequence ignites and then all boilers modulate to so their combined energy output matches the energy output of Boilers #1 and #2 at Base Rate High. After a short MOD DELAY TIME, the boilers will be released to modulate.	STAGE 4 – Boiler #3 in sequence ignites and then all boilers modulate to BASE RATE LOW. After a short MOD DELAY TIME, the boilers will be released to modulate.
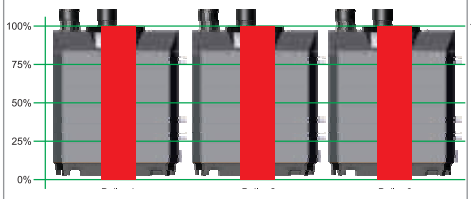	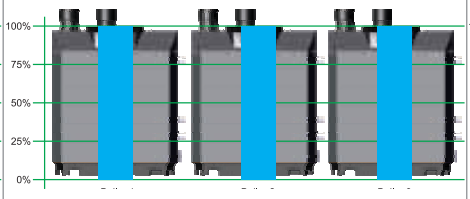	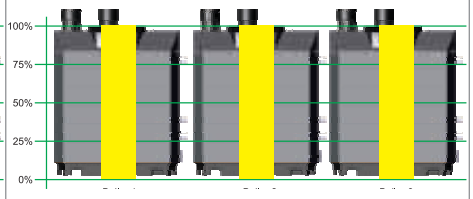
STAGE 5 – After all available boilers are firing, boilers are release to modulate up to 100% of rate.	STAGE 5 – After all available boilers are firing, boilers are release to modulate up to 100% of rate.	STAGE 5 – After all available boilers are firing, boilers are release to modulate up to 100% of rate.

ROTATION AND SEQUENCE *(continued)*

Figure 30 Boiler sequencing — adding and dropping boilers

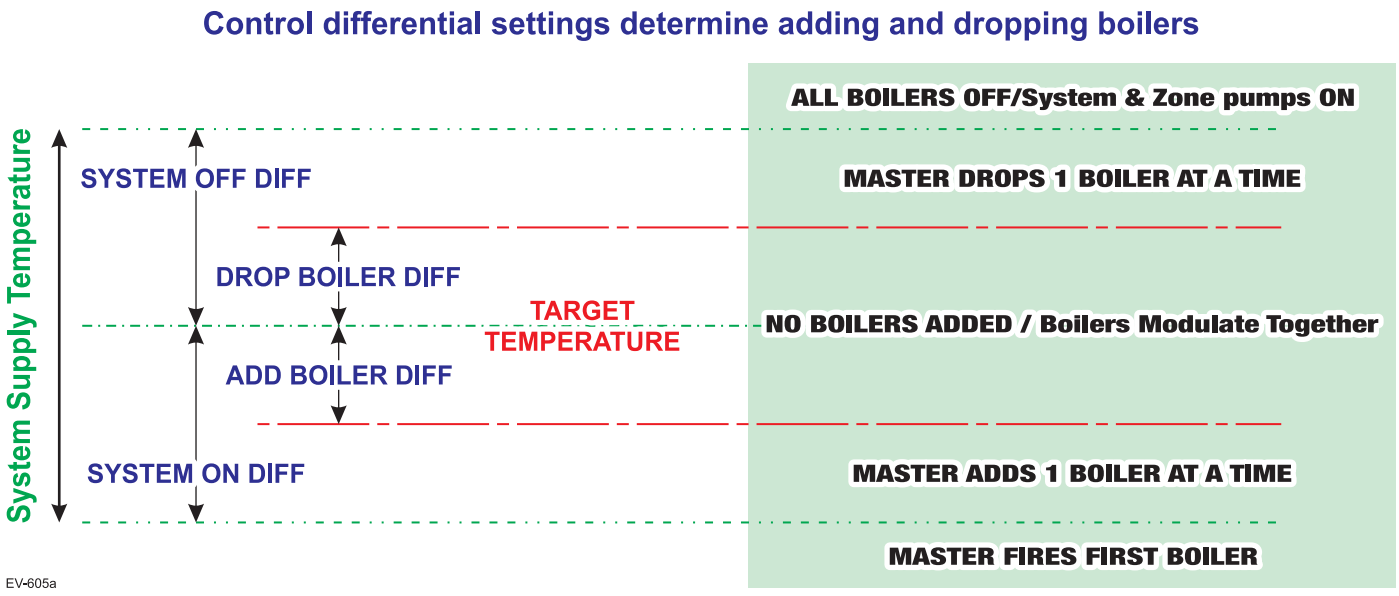

Network Boiler PRIORITY menus

WARNING **Boiler Model, Altitude are critical settings.** Failure to set correctly could result in severe personal injury, death or substantial property damage.

1. Access contractor menus by pressing and holding the UP and DOWN arrow keys at the same time for 7 seconds.
2. See Figure 25, page 46 for the screen sequences up to the CONTRACTOR menu.

Figure 31 SlimFit Network Boiler PRIORITY menus (access menus from CONTRACTOR menu

Local Priority 1	Local Priority 2	Network Priority 1	Network Priority 2	MENU ITEM	DESCRIPTION
x	x			INPUTS ASSIGNED	• List of inputs assigned to this priority/system on the local boiler (appears as 1, 2, 3).
x	x	x	x	SYSTEM TYPE	• Select the system type for this PRIORITY, based on the heating terminal units in the system. Use the CUSTOM selection to set the control for a different system type. The factory preset values for SUPPLY MAX, SUPPLY MIN, OD RESET MAX and OD RESET MIN are chosen based on the normal best setting for the terminal units. See page 45.
x	x			TARGET MOD SENSOR	• Read only — shows whether boiler modulates based on System Supply sensor (network priority) or Boiler Outlet sensor (local priority).
x	x	x	x	TARGET ADJUST	• Select how target temperature is calculated by control: NONE (no reset, fixed target temperature), 0–10V (target temperature based on analog input from remote source), ODT (outdoor reset operation).
x	x	x	x	SUPPLY MAX	• Set SUPPLY MAX to the required supply water temperature for the system at design maximum heat loss (typically 180°F for finned tube baseboard on new installations.)
x	x	x	x	SUPPLY MIN	• SUPPLY MIN should equal the desired minimum supply water temperature for the system. This line will not show if Target Adjust is selected as NONE.
x	x	x	x	OD RESET MAX	• Appears if TARGET ADJUST is set to ODT. Outdoor temperature at which the target temperature reaches its minimum value – usually set at the balance point temperature for the building. (Does not appear if 0–10V or NONE is selected for Target Adjust.)
x	x	x	x	OD RESET MIN	• Appears if TARGET ADJUST is set to ODT. Outdoor temperature at which the target temperature reaches its maximum value – usually set at the outdoor design temperature for the installation. (Does not appear if 0–10V or NONE is selected for Target Adjust.)
x	x	x	x	VOLTS FOR MAX	• Appears if 0–10V is selected for Target Adjust. Set the voltage at which SUPPLY MAX temperature is required.
x	x	x	x	VOLTS FOR MIN	• Appears if 0–10V is selected for Target Adjust. Set the voltage at which SUPPLY MIN temperature is required. For voltages between Min and Max, the target temperature will be adjusted on a linear curve.
x	x	x	x	BOOST TIME	• Every time the call for heat surpasses this duration of time the target temp will increase (boost) up 10°F to a maximum temperature of SUPPLY MAX.
		x	x	SYSTEM OFF DIFF	• This is the amount the temperature must rise above system target to turn the boiler(s) OFF.
		x	x	SYSTEM ON DIFF	• This is the amount the temperature must drop below system target to begin network modulation routine. (This line may NOT appear, depending on TARGET ADJUST setting.)
		x	x	ADD BLR DIFF	• If the system supply temperature has not reached target minus this differential at the end of the STABILIZE TIME, the control will turn on the next available boiler in the boiler firing order.
		x	x	DROP BLR DIFF	• If the system supply temperature rises to more than target plus this differential, the control will turn off the last firing boiler in the boiler firing order. Drop Delay Timer limits how quickly multiple boilers drop off.
		x	x	MOD DELAY TIME	• The time allowed for the boilers to adjust to the requested firing rate before beginning Stabilize Time and resuming modulation.
		x	x	STABILIZE TIME	• The time allowed for all boilers actively heating a network priority to reach target modulation rate requested by the master. If the timer expires and system temperature is less than target – ADD BLR DIFF, the master will add the next available boiler. If there are no more available boilers, the master will freely modulate the boilers to satisfy the heat demand.
		x	x	ADD DELAY TIMER	• Timer starts when the modulation rate of all boilers actively heating a network priority are at BASE RATE HIGH, MAX RATE FOR NET, or are being self-limited. If the timer expires and system temperature is less than target – ADD BLR DIFF, the master will add the next available boiler.
		x	x	DROP DELAY TIMER	• Minimum time before a boiler will be dropped off. This timer only begins after the first boiler has been dropped. It applies as each additional firing boiler is dropped.
		x	x	MAX BLR TEMP	• If the boiler outlet temperature approaches [MAX BOILER TEMP − BOILER ON DIFF] before the system supply temperature reaches its target, the control will modulate the boiler based on the boiler outlet temperature. The boiler will cycle and modulate based on the boiler ON and OFF differential settings. (This line does NOT appear if Target Mod Sensor is set to Boiler Out).
x	x	x	x	BOILER ON DIFF	• This is the amount the temperature must drop below target (or Boiler Max) to turn the boiler ON.

Network Boiler PRIORITY menus *(continued)*

Figure 31 SlimFit PRIORITY menus, continued

Local Priority 1	Local Priority 2	Network Priority 1	Network Priority 2	MENU ITEM	DESCRIPTION
x	x	x	x	BOILER OFF DIFF	• This is the amount the temperature must rise above target (or Boiler Max) to turn the boiler OFF.
x		x		MAX ON TIME	• Maximum time boiler will run on this priority if it is being asked to run on another priority. Will rotate among all priorities its being asked to run. Network boilers are also controlled by NET MAX ON TIME (see Figure 27, page 48). • NETWORK PRIORITY 1 only — Maximum time master will operate the network on NETWORK PRIORITY 1 if NETWORK PRIORITY 2 is calling for heat. • NOTICE When the master boiler detects a local call for heat from any boiler that is currently operating for a network demand, the master control will allow that boiler to switch to its local priority and replace the lost network energy of that boiler appropriately.
	x		x	MIN ON TIME	• Minimum time the boiler will run on an existing priority before switching to a lower priority, or back to an existing higher priority. If a new higher priority is called during MIN ON TIME, the boiler will immediately switch to actively heat the higher priority. Network boilers are also controlled by NET MIN ON TIME (see Figure 27, page 48). • NETWORK PRIORITY 2 only — Minimum time master will operate on a network priority 2 if network priority 1 is calling for heat.
x	x			RUN BOILER PUMP	• Selects whether the Boiler Pump is turned on while running on this priority.
x	x	x	x	RUN AUX PUMP/ OUTPUT	• When set to YES, input/output pairs on any network boiler assigned as AUX PUMP/OUPUT -> ANY TT INPUT BY ITS PRIORITY, will activate. Set this to NO for priorities that do not need this AUX PUMP/OUTPUT to be active.
x	x	x	x	PRE PUMP	• Time associated PUMPS and AUX PUMP/OUTPUT are run before entering prepurge.
x	x	x	x	POST PUMP	• Time associated PUMPS and AUX PUMP/OUTPUT are run after the call for heat has ended and before switching to another call for heat.
		x	x	MAX SYS MBH	• Limits the energy allowed by the boiler network to be put into this priority's system. The default is set to AUTO (the sum of all network boiler sizes). If the total size of the boiler network is too large for a system, adjust MAX SYS MBH lower to the appropriate energy. MAX SYS MBH can be set greater than AUTO if more SlimFit boiler are planned to be installed to the same network. This setting can be adjusted in 100 MBH increments (100 MBH = 100,000 BTU/hours).
		x	x	MIN BOILERS	• The Master turns on this many boilers in the network on an initial call for heat in order to avoid delays due to accumulative wait times between boilers. When switching to another network priority, MIN BOILERS is re-evaluated based on the other priority's setting.
x	x			MAX RATE	• Maximum rate this boiler will modulate up to while running on this priority.
x	x			MIN RATE	• Minimum rate this boiler will modulate down to while running on this priority.
x	x	x	x	ADD'L HEAT DEMAND ACTIVATE CONTACT	• If this is set to 1st: Immediately on a call for heat, the heat demand contacts close and the RESPONSE TIME timer starts. If the call for heat from this demand is still active at the end of the Response Time and the system has not reached [Target Temp - System On Diff], the boiler system will start. If the system temperature is within this range, the boiler system will not start unless the temperature drops below this value. The add'l heat demand contact opens when the heat demand turns off. • If this is set to 2nd: The boiler system starts immediately on a call for heat and starts the RESPONSE TIME timer. If the call for heat is still active when the RESPONSE TIME expires, the boiler will close its additional heat demand contact. • Timers reset when priorities are switched. • If this is set to ODT: The boiler system and AHD will operate according to the setting of ACTIVATE CONTACT below setpoint and ODT setpoint temperature. See page 55 for more details of operation. • NETWORK PRIORITY 1 or 2 — The additional heat demand must be wired to the master boiler. • LOCAL PRIORITY 1 or 2 — The additional heat demand must be wired to the individual boiler. A master boiler cannot use additional heat demand on a local priority.
x	x	x	x	RESPONSE TIME	• Time to wait for system to respond before taking the Activate Contact action. If ACTIVATE CONTACT is OFF, this line does not appear.
x	x	x	x	MAX RATE VOLTS	• The voltage that correspond to the highest modulation rate the boiler will operate at.
x	x	x	x	MIN RATE VOLTS	• The voltage that correspond to the lowest modulation rate the boiler will operate at.
x	x	x	x	TEMP. DEPENDENT	• AHD will use system supply temperature as a shutoff point if system temperature gets to the priority specific Max. Supply temperature and SYS OFF DIFF.
x	x	x	x	ODT SETPOINT	• Used as a switching point to operate AHD as first or second. If ACTIVATE CONTACT below setpoint is set to 1st, the AHD contact activates as 1st below the ODT setpoint temperature and as 2nd above it, the reverse is true if selected as 2nd.
x	x	x	x	ACTIVATE CONTACT BELOW SETPOINT	• The ODT setpoint temperature and as 2nd above it, the reverse is true if selected as 2nd.

Single Boiler PRIORITY menus

WARNING **Boiler Model, Altitude are critical settings.** Failure to set correctly could result in severe personal injury, death or substantial property damage.

1. Access contractor menus by pressing and holding the UP and DOWN arrow keys at the same time for 7 seconds.
2. See Figure 25, page 46 for the screen sequences up to the CONTRACTOR menu.

Figure 32 **SlimFit** single boiler PRIORITY menus (access menus from CONTRACTOR menu

Priority 1	Priority 2	Priority 3	MENU ITEM	DESCRIPTION
x	x	x	INPUTS ASSIGNED	• List of inputs assigned to this priority/system on the local boiler (appears as 1, 2, 3).
x	x	x	SYSTEM TYPE	• Select the system type for this PRIORITY, based on the heating terminal units in the system. Use the CUSTOM selection to set the control for a different system type. The factory preset values for SUPPLY MAX, SUPPLY MIN, OD RESET MAX and OD RESET MIN are chosen based on the normal best setting for the terminal units. See page 45.
x	x	x	TARGET MOD SENSOR	• Select whether boiler modulates based on System Supply sensor or Boiler Outlet sensor.
x	x	x	TARGET ADJUST	• Select how target temperature is calculated by control: NONE (no reset, fixed target temperature), 0–10VDC (target temperature based on analog input from remote source), ODT (outdoor reset operation). This setting cannot be selected if system type is DHW.
x	x	x	SUPPLY MAX	• Set SUPPLY MAX to the required supply water temperature for the system at design maximum heat loss (typically 180°F for finned tube baseboard on new installations.)
x	x	x	SUPPLY MIN	• SUPPLY MIN should equal the desired minimum supply water temperature for the system. This line will not show if Target Adjust is selected as NONE.
x	x	x	OD RESET MAX	• Appears if TARGET ADJUST is set to ODT. Outdoor temperature at which the target temperature reaches its minimum value – usually set at the balance point temperature for the building.
x	x	x	OD RESET MIN	• Appears if TARGET ADJUST is set to ODT. Outdoor temperature at which the target temperature reaches its maximum value – usually set at the outdoor design temperature for the installation.
x	x	x	VOLTS FOR MAX	• Appears if 0–10V is selected for Target Adjust. Set the voltage at which SUPPLY MAX temperature is required.
x	x	x	VOLTS FOR MIN	• Appears if 0–10V is selected for Target Adjust. Set the voltage at which SUPPLY MIN temperature is required. For voltages between Min and Max, the target temperature will be adjusted on a linear curve.
x	x	x	BOOST TIME	• Every time the call for heat surpasses this duration of time the target temp will increase (boost) up 10°F to a maximum temperature of SUPPLY MAX.
x	x	x	SYSTEM OFF DIFF	• This is the amount the temperature must rise above system target to turn the boiler OFF. (This line does NOT appear if Target Mod Sensor is set to Boiler Out).
x	x	x	SYSTEM ON DIFF	• This is the amount the temperature must drop below system target to turn the boiler ON. (This line does NOT appear if Target Mod Sensor is set to Boiler Out).
x	x	x	MAX BLR TEMP	• If the boiler outlet temperature approaches [MAX BOILER TEMP – BOILER ON DIFF] before the system supply temperature reaches its target, the control will modulate the boiler based on the boiler outlet temperature. The boiler will cycle and modulate based on the boiler ON and OFF differential settings. (This line does NOT appear if Target Mod Sensor is set to Boiler Out).

Single Boiler PRIORITY menus *(continued)*

Figure 32 SlimFit single boiler PRIORITY menus, continued

Priority 1	Priority 2	Priority 3	MENU ITEM	DESCRIPTION
x	x	x	**BOILER ON DIFF**	• This is the amount the temperature must drop below target to turn the boiler ON.
x	x	x	**BOILER OFF DIFF**	• This is the amount the temperature must rise above target to turn the boiler OFF.
x	x		**MAX ON TIME**	• Maximum time this boiler will run on this priority if it is being asked to run on another priority. Will rotate among all priorities its being asked to run.
	x	x	**MIN ON TIME**	• Minimum time the boiler will run on an existing priority before switching to a lower priority, or back to an existing higher priority. If a new higher priority is called during MIN ON TIME, the boiler will immediately switch to actively heat the higher priority.
x	x	x	**RUN BOILER PUMP**	• Selects whether the Boiler Pump is turned on while running on this call for heat.
x	x	x	**RUN AUX PUMP/ OUTPUT**	• When set to YES, any input/output pairs assigned as AUX PUMP/OUPUT -> ANY TT INPUT BY ITS PRIORITY, will activate. Set this to NO for priorities that do not need this AUX PUMP/ OUTPUT to be active.
x	x	x	**PRE PUMP**	• Time associated PUMPS and AUX PUMP/OUTPUT are run before entering prepurge.
x	x	x	**POST PUMP**	• Time associated PUMPS and AUX PUMP/OUTPUT are run after the call for heat has ended and before switching to another call for heat.
x	x	x	**MAX RATE**	• Maximum rate this boiler will modulate up to while running on this priority.
x	x	x	**MIN RATE**	• Minimum rate this boiler will modulate down to while running on this priority.
x	x	x	**ADD'L HEAT DEMAND ACTIVATE CONTACT**	• If this is set to 1st: Immediately on a call for heat, the heat demand contacts close and the RESPONSE TIME timer starts. If the call for heat from this demand is still active at the end of the Response Time and the system has not reached [Target Temp - System On Diff], the boiler system will start. If the system temperature is within this range, the boiler system will not start unless the temperature drops below this value. The add'l heat demand contact opens when the heat demand turns off. • If this is set to 2nd: The boiler system starts immediately on a call for heat and starts the RESPONSE TIME timer. If the call for heat is still active when the RESPONSE TIME expires, the boiler will close its additional heat demand contact. • Timers reset when priorities are switched. • If this is set to ODT: The boiler system and AHD will operate according to the setting of ACTIVATE CONTACT below setpoint and ODT setpoint temperature. See page 55 for more details of operation. • NETWORK PRIORITY 1 or 2 — The additional heat demand must be wired to the master boiler. • LOCAL PRIORITY 1 or 2 — The additional heat demand must be wired to the individual boiler. A master boiler cannot use additional heat demand on a local priority.
x	x	x	**RESPONSE TIME**	• Time to wait for system to respond before taking the Activate Contact action. If ACTIVATE CONTACT is OFF, this line does not appear.
x	x	x	**MAX RATE VOLTS**	• The voltage that correspond to the highest modulation rate the boiler will operate at.
x	x	x	**MIN RATE VOLTS**	• The voltage that correspond to the lowest modulation rate the boiler will operate at.
x	x	x	**TEMP. DEPENDENT**	• AHD will use system supply temperature as a shutoff point if system temperature gets to the priority specific Max. Supply temperature and SYS OFF DIFF.
x	x	x	**ODT SETPOINT**	• Used as a switching point to operate AHD as first or second. If ACTIVATE CONTACT Below Setpoint is set to 1st, the AHD contact activates as 1st below
x	x	x	**ACTIVATE CONTACT BELOW SETPOINT**	• The ODT setpoint temperature and as 2nd above it, the reverse is true if selected as 2nd.

ASSIGN INPUTS menu

WARNING **Boiler Model, Altitude are critical settings.** Failure to set correctly could result in severe personal injury, death or substantial property damage.

1. Access contractor menus by pressing and holding the UP and DOWN arrow keys at the same time for 7 seconds.
2. See Figure 25, page 46 for the screen sequences up to the CONTRACTOR menu.

Figure 33 SlimFit Assign Inputs menu (see Figure 25, page 46 to access CONTRACTOR menu)

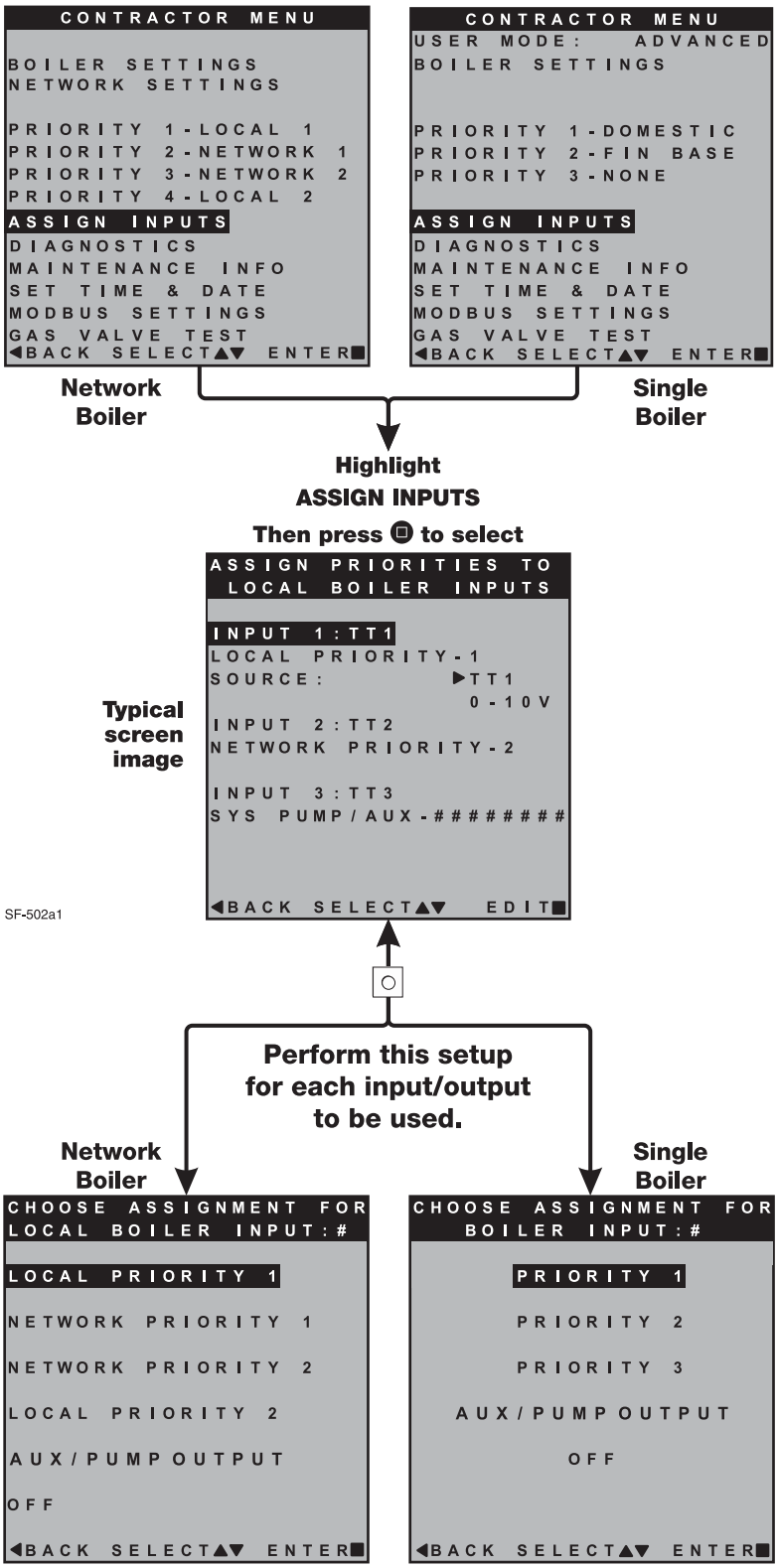

MENU ITEM	PURPOSE
Overview	• There are three inputs/outputs available on each boiler. This menu allows assignment of which inputs/outputs operate which priority/system.
INPUT 1 INPUT 2 INPUT 3	• See "SlimFit control Priorities & Input/Outputs" on page 4 for an explanation of priorities, inputs and outputs. • Priority settings are adjustable. See page 52 through page 55 for priority options. • The Assign Inputs menu is for designating priorities to the correct inputs according to the system installed. • Multiple inputs can use the same priority. • The Source line designates Input 1 as either thermostat controlled or 0–10V controlled. (On Master/Shadow systems, this line is not present and Input 1 is predetermined as a thermostat-controlled input.) • When choosing 0–10V as the Source, a NOTICE screen will pop up explaining the use of the 0–10V input. Press SAVE to use this option, or press cancel to return the input to TT1.
AUX PUMP/ OUTPUT	• The AUX PUMP/OUTPUT function enables an output to turn on in a variety of selectable conditions. • See page 57 for explanations and recommended applications. • In network boiler applications, outputs assigned AUX PUMP/OUTPUT are controlled by the master boiler, based on the input/output and blower behaviors of all boilers on the network.

Screens shown here are typical only. Actual screens depend on control settings chosen.

AUX PUMP/OUTPUT options

Figure 34 AUX PUMP/ OUTPUT operation (accessed in ASSIGN INPUTS menu – see page 56)

Option	Activation conditions	Suggested uses
ALWAYS ON	• Output is always energized whenever the control is powered.	• Hot loop for seasonal boilers that are manually shut down at end of season and started up at start of heating season.
EXTERNAL SWITCH	• The output is energized on closure of an external switch wired to this input and is de-energized when the external switch opens.	• Hot loop for boilers whose CH is manually shut down at end of season and started up at start of heating season, but remain available for local calls (DHW, etc.).
OUTDOOR BELOW WWSD	• This output is energized only when outdoor temperature is below the WWSD setting (see BOILER SETTINGS menu, Figure 26, page 47). • This setting is non-selectable if WWSD is set to OFF or ODT is not connected at initial boiler power. If Outdoor Below WWSD is already chosen and WWSD is later set to OFF, Outdoor Below WWSD will behave as Always On.	• Hot loop for boilers whose CH is automatically shut down based on outdoor temperature (inferred heat loss), but remain on for local calls (DHW, etc.).
ANY TT INPUT	• The assigned output is energized if there is an input closure on any of the network boilers. • The assigned output will de-energize once there are; no input closures on any of the network boilers, post-purge has finished, and post-pump time has expired. • If the closed input is configured for a heat demand, its output will de-energize after post-purge and post-pump.	• Energize a system pump relay if pump must run during all heating calls.

ANY TT INPUT BY ITS PRIORITY SETTINGS	• The assigned output is energized:
	  • If there is an input closure on any of the network boilers.
	AND . . .
	  • RUN AUX PUMP/OUTPUT is set to YES for the priority assigned to the closed input.
	• The assigned output will de-energize once there are; no input closures on any of the network boilers, post-purge has finished, and post-pump time has expired.
		• Energize a system pump relay if pump must run only on some heat calls (such as systems with locally-connected DHW heating).

ANY BURNER DEMAND	• The assigned output is energized when any boiler on the network receives a call for heat and starts to pre-purge. • The assigned output is de-energized once all burners are off and post-purge is complete.	• Use for interlocking with combustion air damper, flow switch, etc.

Figure 35 AUX PUMP/ OUTPUT operation — start, run and stop, based on boiler status

Option	Standby	TT Closed	Pre-Pump	Pre-Purge	Burner Running	Post-Purge	Post-Pump	Standby	Comments
ANY TT INPUT OR ANY TT INPUT BY ITS PRIORITY SETTINGS	*off*	*ON* →						*off*	• See Figure 34 for explanation of differences between the ANY TT INPUT options.
ANY BURNER DEMAND	*off*	*off*	*off*	*ON* →			*off*	*off*	

Additional heat demand

Additional heat demand

1. This settings acts as a contact to activate other boilers or heating sources, such as a different boiler or a furnace.
   a. OFF – Function disabled.
   b. 1st – The additional heat demand contact will be activated before the SlimFit boiler.
      i. When the SlimFit boiler receives a call for heat, it immediately activates the "Additional Heat Demand contact", terminals P16 #6 and #7. This contact is used to start the next heat source.
      ii. If "0-10v Output" is being used, "Temp Dependent" must be set to YES. If the Priority configured for Additional Heat Demand is currently active 2 volts will be immediately sent from P16 #1 and #2 to the next heating source.
      iii. After 1 minute, the 0-10v output will begin to modulate, based on the system temperature. When the Response Time is reached, the SlimFit boiler begins its startup sequence and continues to heat until the demand is satisfied.
   c. 2nd – The additional heat demand contact will be activated after the SlimFit boiler.
      i. When the SlimFit boiler receives a call for heat, it begins its startup sequence and also starts the Response Time.
      ii. After the Response Time expires, the Additional Heat Demand contact is closed and the 0-10v Output (if used, w/Temp Dependent set to YES) sends 2 volts from P16 #1 and #2 to the next heating source.
      iii. The 0-10v Output will modulate based on the requested SlimFit boiler modulation rate. If a boiler lockout occurs, the 0-10v Output will continue to modulate based on this requested rate.
   d. ODT - A user defined ODT SETPOINT is used as a switching point to operate Additional Heat Demand (AHD) as 1st or 2nd as defined by the user setting ACTIVATE CONTACT BELOW SETPOINT.
      i. If ACTIVATE CONTACT BELOW SETPOINT is set to 1st ,additional heat demand functionality will operate as AHD 1st below the ODT SETPOINT temperature and operate as AHD 2nd above the ODT SETPOINT temperature.
      ii. If ACTIVATE CONTACT BELOW SETPOINT is set to 2nd the functionality would be reversed.
      iii. If the ODT sensor fails; default AHD to activate based on the user setting for ACTIVATE CONTACT BELOW SETPOINT.
2. Temperature Dependent
   a. When System Temperature Dependent is set to YES, the **SlimFit** boiler must have system supply and return sensors connected and the target modulation sensor will be set to the supply sensor.
   b. If system supply and return sensors are not connected, the System Temperature Dependent cannot be selected.
   c. With this option selected to YES, the boiler and additional heat demand/0-10v output will modulate based on the system temperature. If the system temperature becomes higher than setpoint temperature + system off differential, the boiler and additional heat demand/0-10v output will turn off. The boiler and Additional Heat Demand will become active again when the system temperature becomes lower than setpoint temperature – System on Differential.
3. 0-10v Output – The boiler will output a voltage signal equivalent to the modulation rate of the SlimFit.
   a. Max/Min Rate Volts
      i. The MAX RATE VOLTS and MIN RATE VOLTS are used to scale the analog output such that the 20% minimum modulation rate will output MIN RATE VOLTS and the 100% modulation rate will output MAX RATE VOLTS.

MAINTENANCE, DATE AND TIME menus

Figure 36 MAINTENANCE, DATE AND TIME menus — navigation (see Figure 22, page 42 for access information)

Maintenance Info	Comments
Name	Contractor name to appear in maintenance reminders and during lockouts
Phone	Contractor phone number
Model	Displays the boiler model selected in the boiler setup
CP Number	Enter the CP# of the boiler
Installed	Enter the date the boiler was installed
Last Date	Date automatically entered when Reset Reminder is chosen by contractor
Next Date	Date automatically calculated when Reset Reminder is selected by contractor
Interval Settings	Contractor selects maintenance reminder frequency based on service history
Reset Reminder	Contractor selects this to update Last maintenance Date and Next Date. Homeowner uses this to ignore the reminder and update only the Next Date.

Set Time and Date	Comments
Year	Set year (homeowner or contractor)
Month	Set month (homeowner or contractor)
Day	Set day (homeowner or contractor)
Hour	Set hour (homeowner or contractor)
Minute	Set minute (homeowner or contractor)

MAINTENANCE INFO

Use this section to enter contractor's information, CP number, install date and to enter an automatic notice for maintenance (default is 12 months). Because this shows on the display, it is an automatic means of notifying the homeowner of need for scheduled maintenance by the technician. Select RESET REMINDER to reset for the next maintenance date.

SET TIME AND DATE

Enter current date and time. This allows correct maintenance reminder timing and provides date and time stamp for lockout histories on ERROR screen in Diagnostic Menu.

Gas Valve Test

Select gas valve 1 or gas valve 2 to alter the state of the corresponding gas valve relay during burner fire.

WEIL-McLAIN®

Weil-McLain
500 Blaine Street
Michigan City, IN 46360-2388
http://www.weil-mclain.com