WEIL-McLAIN®

SVF™ STAINLESS VERTICAL FIRETUBE

Series 1

Models 1500 - 3000
Commercial Condensing
Gas-fired water boilers

Boiler Manual

- Installation
- Maintenance
- Startup
- Parts

WARNING This manual must only be used by a qualified heating installer/service technician. Read all instructions, including this manual and all other information shipped with the boiler, before installing. Perform steps in the order given. Failure to comply could result in severe personal injury, death or substantial property damage.

DO NOT operate the boiler during construction unless combustion air is piped to the boiler air inlet from a dust-free and contaminant-free area. The boiler can be severely damaged by drywall dust or other combustion air contaminants.

Part number 550-100-250/0420

The SVF™ Commercial Condensing Water Boiler

1 **Stainless steel heat exchanger**
Heat exchanger stainless steel vertical tube.

2 **Burner/Heat exchanger cover plate**

3 **Blower (*SVF* 1500 shown)**
Air enters through the air intake adapter, then enters the venturi. The blower pulls air and gas through the venturi and pushes the mixture into the burner. The advanced blower design and air inlet silencer yield very quiet operation.

4 **Air filter**

5 **Swirl plate /Shroud**
When air flows through the swirl plate/shroud, it creates a vacuum that is sensed by the gas valve to regulate gas flow.

6 **Control module** (see Control overview)

7 **Expansion module**
The expansion module operates the gas valve, monitors gas pressure switches and provides a dry contact for the boiler circulator (suitable for up to 10 amps). Connections for BMS and Boiler-to-Boiler communications are also located on the board.

8 **Electronic display & buttons**
The electronic display is used to configure boiler settings and monitor boiler operation. The buttons allow changing display mode, entering setting values, and resetting after lockout.

9 **Transformer**

10 **Ignition transformer** (not shown)

11 **Blower relay (*SVF* 1500/2000) Contactor (*SVF* 2500/3000)**

12 **ON/OFF switch**

13 **Automatic gas valve**
The automatic gas valve incorporates two solenoid-operated valve seats. The valve senses the vacuum in the venturi (item 5) caused by flowing air. Gas flows in proportion to air flow, so air/fuel ratio remains constant as blower speed/air flow changes.

14 **Gas valve reference line**
This line is used to measure the pressure of the incoming air to the venturi and adjust the combustion accordingly.

15 **Manual gas valve with pressure port**

16 **Air Vent – Automatic air vent**

17 **Electrical entrance snap-in covers**
Knockouts are provided in the terminal box, allowing conduit entry right of the low-voltage and line-voltage field wiring terminal strips.

18 **High gas pressure switch** (mounted on the right side of gas valve)

19 **Low gas pressure switch**

20 **Air pressure switch –** Maximum flue pressure

21 **Low water cutoff (shown in Top View)**
The low water cutoff is mounted in a tapping on the top water outlet pipe. (Built in test button - Manual reset is done through main control)

22 **Premix gas burner (not shown)**
Made with high-grade stainless steel and fiber mesh construction, the burner uses pre-mixed gas and air.

23 **Ignition electrode and flame sense rod**
The burner flame is ignited by applying a high voltage to the ignition electrode, located in the combustion chamber. This causes a spark (from electrode to ground). After ignition, the flame sense rod measures flame signal.

24 **Flame inspection window**
The quartz glass windows provides a view of the burner surface and flame.

25 **Water outlet pipe (system supply)** 3" Class 150 flanged

26 **Water return pipe (system return)** 3" Class 150 flanged

27 **Gauge port**
The pressure/temperature gauge is shipped loose for field installation in this port and can be installed on either side of water outlet pipe (system supply).

28 **Relief valve nipple**
The relief valve is shipped loose for field installation on this nipple.

29 **Temperature sensor port — Boiler outlet water temperature**
The outlet sensor port is located on top of the water outlet pipe (system supply), just outside the heat exchanger.

Control overview

- The control can operate a single boiler or coordinate with other ***SVF* 1500-3000 Series 1** boilers in a multiple boiler system.
- Control inputs and outputs allow operation of multiple heating circuits (space heating and DHW, for example).
- Up to three priority levels can be set, providing automatic switch-over on demand.
- This manual provides quick set-up information for single boiler installations.
- The Advanced Manual, also supplied with the boiler, provides instructions for setting up multiple-boiler systems and for using advanced options for single boilers.

Control operation

- The control responds to signals from the room thermostats, DHW aquastats (if used), boiler sensors (boiler outlet, boiler inlet, flue temperature), outdoor temperature and system sensor, if used.
- The control automatically adjusts blower speed (and gas flow rate) to match boiler output to space heating and/or DHW heating demand.
- The default control settings provide for three space heating zones. The control can be easily set up for operation with a DHW zone, with or without domestic priority.

Control *WIZARD*

- The control setup Wizard is available from the BOILER SETTINGS menu that appears during initial startup.
- The Wizard leads through a step-by-step setup procedure designed for the application chosen.
- Context-sensitive help is available to explain the purpose of key setup items.

30 **Temperature sensor port — Boiler inlet water temperature**
The return sensor port is located on top of the water return pipe (system return), just outside the heat exchanger.

31 **Flue temperature port sensor**

32 **Gas connection –** 2" FNPT

33 **Vent connection –** 3-in-1 adapter allows PVC/CPVC, Poly Pro or stainless steel connection. If using PP or SS brands other than M & G Duravent consult manufacturer for proper adapter.

34 **Filter minder**

35 **Jacket panels**
The three (3) front jacket panels and four (4) side jacket panels are removable for access to the blower, gas valve, pressure switches, controls and the ASME Rating plate.

36 **Boiler top panels -** The top panel has a opening for gas connection.

37 **Casters (used for locating boiler only)**

38 **Leveling legs (extended after boiler is in position)**

39 **Heat exchanger drain connection**

40 **Condensate Trap**

41 **ASME Rating plate**
The plate has all the ASME Section IV required information.

42 **Air inlet adapter**
Storage location until direct vent installation.

The SVF™ Commercial Condensing Water Boiler

Electrical panel components

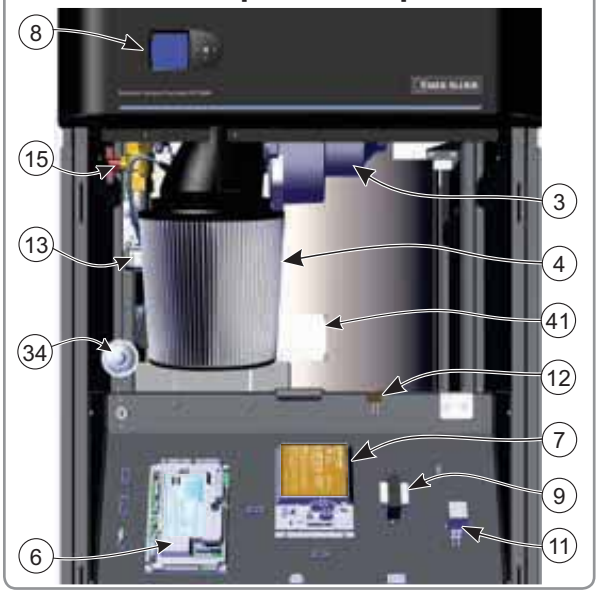

Components - Top View

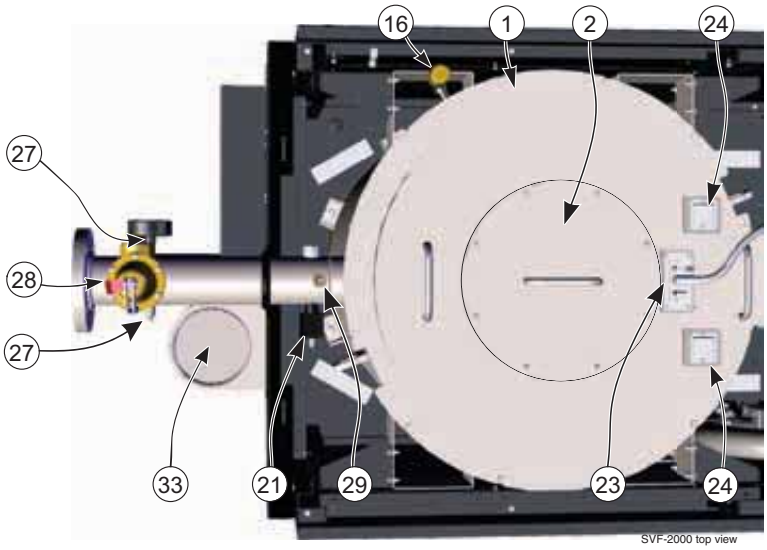

Components - Back View

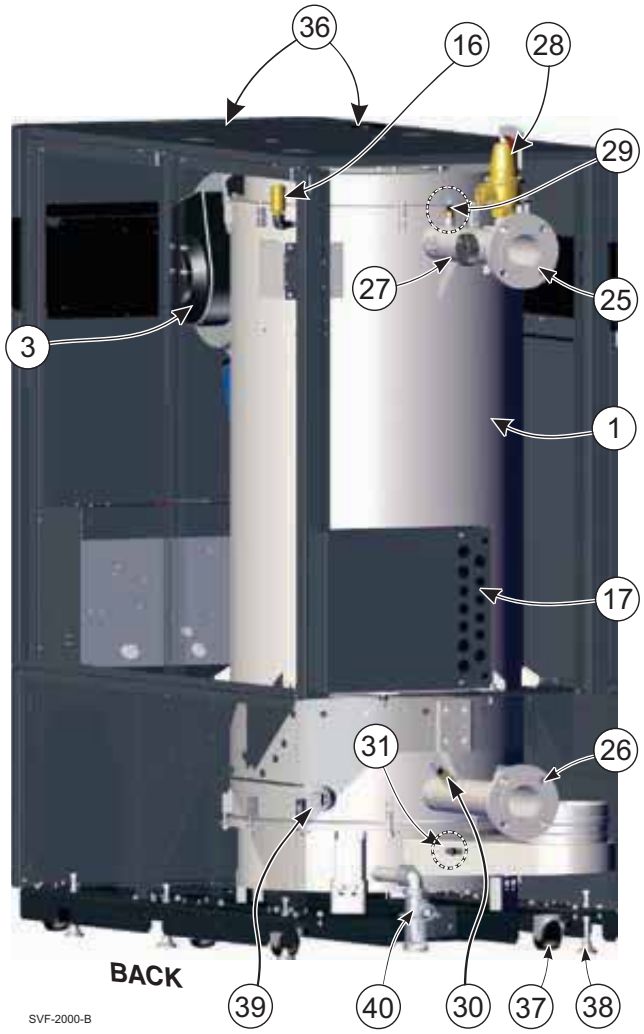

Components - Front View

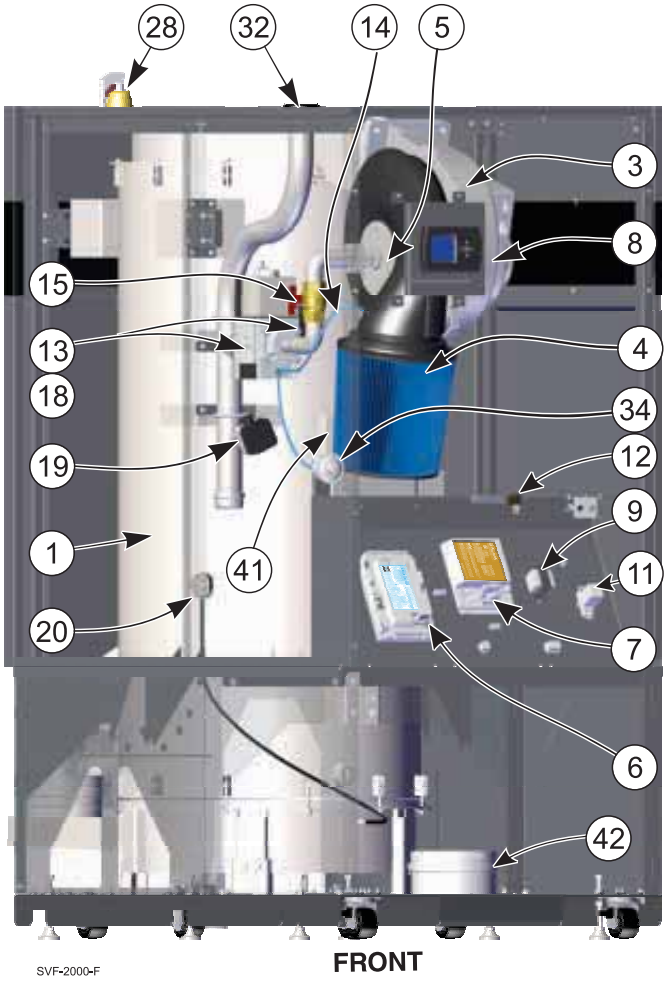

Contents

Contents 4
Hazard definitions 4
Please read before proceeding 5
Prepare boiler location 6
Prepare boiler 9
Propane conversion procedure 12
Install water piping 14
Venting/air piping — Massachusetts installations 24
Venting/combustion air — general 25
Venting/combustion air — options (Category II & IV) . . . 27
Appliances remaining on an existing vent system 28
Venting/combustion air — options (Category II) 29
DIRECT EXHAUST — Boiler room air openings (Category II and IV). . 32
DIRECT EXHAUST — Vertical (Category II and IV) 34
DIRECT EXHAUST — Sidewall Termination location (Category IV) . . 35
DIRECT EXHAUST — Sidewall (Category IV) 36
DIRECT VENT — Boiler room air openings (Category IV) . .38
DIRECT VENT — Sidewall Termination location (Category IV). . 40
DIRECT VENT — Sidewall (Category IV) 41
DIRECT VENT — Vertical (Category IV) 43
Install condensate components 46
Gas piping 47
Gas Train Diagram 48
Field wiring (see Figure 51 - Figure 58) 49
Zoning with the Unity™ Control 66
Control operation and setup 68
CONTRACTOR menus 74

WARNING DO NOT START THIS BOILER without following all instructions and procedures specified in the following sections:
"Startup — fill the system" on page 85
"Startup — final checks" on page 87
"Startup procedure" on page 88.

Failure to follow the instructions in this manual could result in severe personal injury, death or substantial property damage.

BOILER SETTINGS menu, BASIC mode 75
PRIORITY 1, 2, 3 menus, BASIC mode 76
ASSIGN INPUTS menu, BASIC mode 77
DIAGNOSTIC menu 79
MAINTENANCE, DATE AND TIME menus 84
Startup — fill the system 85
Startup — final checks 87
Startup procedure 88
Annual startup and maintenance schedule. 92
Annual startup 93
Troubleshooting 99
Maintenance 108
Replacement parts 111
Dimensions 118
Ratings — SVF Series 1 boilers 120
Installation and Service Certificate 121

Hazard definitions

The following defined terms are used throughout this manual to bring attention to the presence of hazards of various risk levels or to important information concerning the life of the product.

DANGER Indicates presence of hazards that will cause severe personal injury, death or substantial property damage.

CAUTION Indicates presence of hazards that will or can cause minor personal injury or property damage.

WARNING Indicates presence of hazards that can cause severe personal injury, death or substantial property damage.

NOTICE Indicates special instructions on installation, operation or maintenance that are important but not related to personal injury or property damage.

Please read before proceeding

WARNING

Installer— Read all instructions, including this manual and all other information shipped with the boiler, before installing. Perform steps in the order given.

User — This manual is for use only by a qualified heating installer/service technician. Refer to User's Information Manual for your reference.

User — Have this boiler serviced/inspected by a qualified service technician, at least annually.

Failure to comply with the above could result in severe personal injury, death or substantial property damage.

NOTICE

Write in the Consumer Protection (CP) number in the space provided on the Installation certificate on page 121 if not already shown.

When calling or writing about the boiler— Please have the boiler model number from the boiler rating label and the CP number from the boiler jacket.

Consider piping and installation when determining boiler location.

Any claims for damage or shortage in shipment must be filed immediately against the transportation company by the consignee.

DANGER

If any part of a boiler, burner or its controls has been sprayed with or submerged under water, either partially or fully, DO NOT attempt to operate the boiler until the boiler has been either replaced or completely repaired, inspected, and you are sure that the boiler and all components are in good condition and fully reliable.

Otherwise, by operating this boiler, you will cause a fire or explosion hazard, and an electrical shock hazard, leading to serious injury, death, or substantial property damage. See the instructions at right.

Saltwater Damage — The exposure of boiler components to saltwater can have both immediate and long-term effects. While the immediate effects of saltwater damage are similar to those of freshwater (shorting out of electrical components, washing out of critical lubricants, etc.), salt and other contaminants left behind can lead to longer term issues after the water is gone due to the conductive and corrosive nature of the salt residue. Therefore, Weil-McLain equipment contaminated with saltwater or polluted water will no longer be covered under warranty and should be replaced.

Electrical Damage — If any **electrical component** or **wiring** came into contact with water, or was suspected to have come into contact with water, replace the boiler with a new Weil-McLain boiler.

WARNING **Failure to adhere to the guidelines below can result in severe personal injury, death or substantial property damage.**

When servicing boiler —

- To avoid electric shock, disconnect all electrical supplies to the boiler before performing maintenance.
- To avoid severe burns, allow boiler to cool before performing maintenance.
- This boiler contains ceramic fiber and fiberglass materials. Refer to the WARNING and instructions on page 93.

Boiler operation —

- Do not block flow of combustion or ventilation air to boiler.
- Should overheating occur or gas supply fail to shut off, do not turn off or disconnect electrical supply to pump. Instead, shut off the gas supply at a location external to the appliance.

Boiler water —

- The heat exchanger is made of stainless steel, and requires that system pH always be between 7.0 and 8.5 and water chemistry be checked. **Chemical treatment is required. See pages 85 and 86 for details.**
- **Thoroughly flush the system** (without boiler connected) to remove sediment. **Install a strainer or other sediment removal equipment** if necessary. The high-efficiency heat exchanger can be damaged by build-up or corrosion due to sediment.
- Do not use petroleum-based cleaning or sealing compounds in boiler system. Gaskets and seals in the system may be damaged. This can result in substantial property damage.
- Continual fresh make-up water will reduce boiler life. Mineral buildup in heat exchanger reduces heat transfer, overheats the stainless steel heat exchanger, and causes failure. Addition of oxygen carried in by make-up water can cause internal corrosion. Leaks in boiler or piping must be repaired at once to prevent make-up water. Use this boiler ONLY in a closed-loop system.
- Do not add cold water to a hot boiler. Thermal shock can cause heat exchanger to crack.

Freeze protection fluids —

NEVER use automotive or standard glycol antifreeze, even glycol made for hydronic systems. Use only freeze-protection fluids recommended in this manual (see page 85). Follow all guidelines given. Thoroughly clean and flush any replacement boiler system that has used glycol before installing the new ***SVF***™ boiler.

CAUTION **Frozen Water Damage Hazard**

Residences or buildings that are unattended in severely cold weather, boiler system components failures, power outages, or other electrical system failures could result in frozen plumbing and water damage in a matter of hours. For your protection, take preventative actions such as having a security system installed that operates during power outages, senses low temperature, and initiates an effective action. Consult with your boiler contractor or a home security agency.

Commonwealth of Massachusetts

When the boiler is installed within the Commonwealth of Massachusetts:

- This product must be installed by a licensed plumber or gas fitter.
- If antifreeze is used, a reduced pressure back-flow preventer device shall be used.
- Sidewall vent air installations — see instruction on page 24.

Prepare boiler location

Installations must comply with:

- Local, state, provincial, and national codes, laws, regulations and ordinances.
- National Fuel Gas Code, ANSI Z223.1/NFPA 54 - latest edition.
- National Electrical Code ANSI/NFPA 70 – latest edition. Electrical installation and grounding must be in accordance with CSA C22.1, Part 1, Canadian Electrical Code, and/or local codes.
- For Canada only: CAN/CSA B149.1, Natural Gas and Propane Installation Code, and any local codes.
- Where required by the authority having jurisdiction, the installation must conform to the Standard for Controls and Safety Devices for Automatically Fired Boilers, ANSI/ASME CSD-1.

NOTICE The ***SVF***™ boiler gas manifold and controls met safe lighting and other performance criteria when boiler underwent tests specified in ANSI Z21.13 — latest edition.

Before locating the boiler, check:

1. Check for nearby connection to:
   - System water piping
   - Venting connections
   - Gas supply piping
   - Electrical power
   - Location of drain for condensate
2. Check area around boiler. Remove any combustible materials, gasoline and other flammable liquids.

⚠WARNING Failure to keep boiler area clear and free of combustible materials, gasoline and other flammable liquids and vapors can result in severe personal injury, death or substantial property damage.

3. The ***SVF***™ boiler must be installed so that gas control system components are protected from dripping or spraying water or rain during operation or service.
4. If new boiler will replace existing boiler, check for and correct system problems, such as:
   - System leaks causing oxygen corrosion or heat exchanger cracks from hard water deposits.
   - Incorrectly-sized expansion tank.
   - Lack of freeze protection in boiler water causing system and boiler to freeze and leak.

Flooring and foundation

Flooring

The ***SVF***™ boiler is approved for installation on combustible flooring, but must never be installed on carpeting.

⚠WARNING Do not install boiler on carpeting even if foundation is used. Fire can result, causing severe personal injury, death or substantial property damage.

Foundation

1. The boiler mounting surface must be level and suitable for the load.
2. Provide a solid foundation pad, at least 2 inches above the floor, if any of the following is true:
   - floor can become flooded.
   - the floor is dirt, sand, gravel or other loose material.
   - the boiler mounting area is severely uneven or sloped.
3. The minimum foundation size is listed in Figure 1.
4. Foundation may be of wood, brick or concrete (minimum 2 inches thick) construction.
5. If flooding is possible, elevate boiler sufficiently to prevent water from reaching boiler.

Figure 1 Minimum foundation size

Boiler model	Minimum size (inches)
SVF 1500	38 × 67
***SVF* 2000**	38 × 67
***SVF* 2500**	38 × 67
***SVF* 3000**	38 × 67

Garage installation

Precautions

Take the following special precautions when installing the boiler in a garage. If the boiler is located in a garage:

- Mount the boiler at a height above the floor as specified in the National Fuel Gas Code - ANSI Z223.1/NFPA 54 – latest edition for U. S. installations, or Natural Gas and Propane Installation Code - CAN/CSA B149.1 for Canadian installations.
- Locate or protect the boiler so it cannot be damaged by a moving vehicle.
- Ensure that the installation complies with all applicable codes.

Prepare boiler location *(continued)*

Clearance requirements

Clearances from combustible materials

1. Hot water pipes — at least ½" from combustible materials.
2. Vent pipe — at least 3⁄16" from combustible materials.
   - See vent manufacturers instructions.
3. See Figure 2 for other clearance minimums.

Clearances for service access

See Figure 2 for recommended service clearances. If you do not provide minimum clearances shown, it might not be possible to service the boiler without removing it from the space.

WARNING Openings in floors, walls, ceilings or roofs must be designed for fire stopping as required by local codes. Vent pipe openings through combustible materials must be ⅜" larger in diameter than the vent pipe. Air pipe openings should be ⅜" larger in diameter than the pipe or as required by the pipe manufacturer.

Air openings

WARNING Provide air openings for combustion air and/or ventilation of the room as specified in this manual and as required by applicable codes.

Figure 2 Clearances for *SVF™* boilers

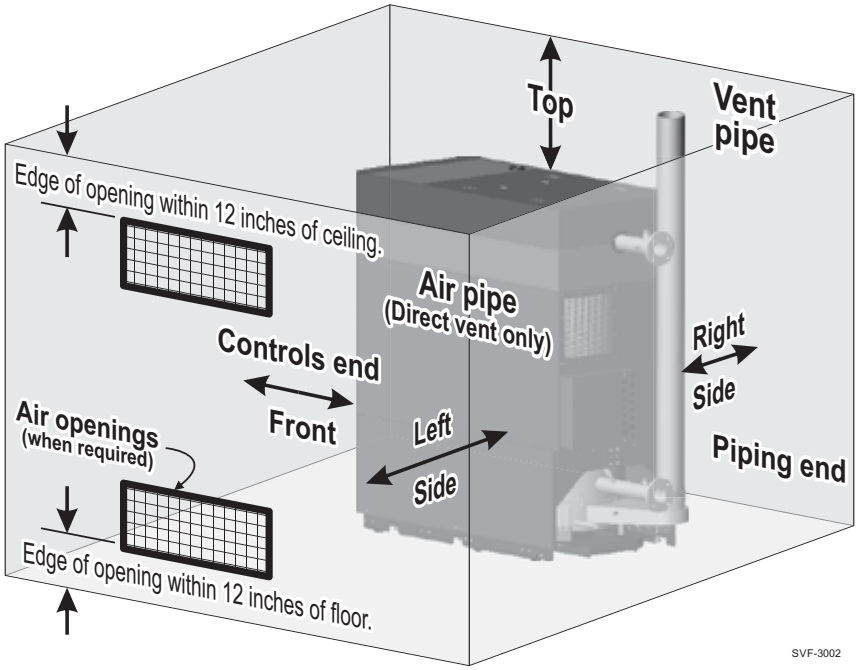

Ensure that the installation complies with all state, local and applicable codes.			
Clearance from:	Minimum clearance to combustible surfaces	Minimum allowable service clearances	Recommended Minimum service access clearance
	(inches)	(inches)	(inches)
Controls end (Front)	0	24	35
Left side	0	0**	24**
Right side	0	0**	24**
Piping end	18	18*	48* (Measured from frame, not pipes)
Top	0	18***	18***
Floor	0	—	—
Vent pipe	3⁄16	—	—
Hot water pipes	½	—	—

Notes: * Piping service clearances of less than 48" will Not allow for the removal of the condensate dish. The boiler may have to be removed from installation for replacement of the condensate dish.
** Boiler can be installed side by side with another boiler. Clearances shown allow for easier service and maintenance.
*** Top clearance allows for access to use hinged cover plate for burner and heat exchanger service.

Prepare boiler location *(continued)*

NOTICE Verify that boiler placement and clearances comply with all applicable codes.

Placing multiple boilers

1. Locate multiple boilers in boiler room to provide the clearances shown in:
   a. Figure 3 (side-to-side), or
   b. Other layouts can be used if all required clearances are maintained.
2. Provide indicated clearances around boilers for access and servicing. If recommended dimensions are not possible, provide at least the minimum clearances given on page 7. Also follow local codes.
3. Construct boiler foundation if boiler room floor is uneven or if there is a danger of flooding. Size foundation to allow for clearance and spacing dimensions shown in either Figure 3.
4. Chalk-line boiler locations on foundation or boiler room floor.
5. Uncrate and assemble boilers according to instructions in this manual.
6. Provide clearance for installation of venting, air piping, gas piping, condensate piping and components, expansion tank, boiler pump and other accessories.

Figure 3 Side-to-side mounting of multiple boiler

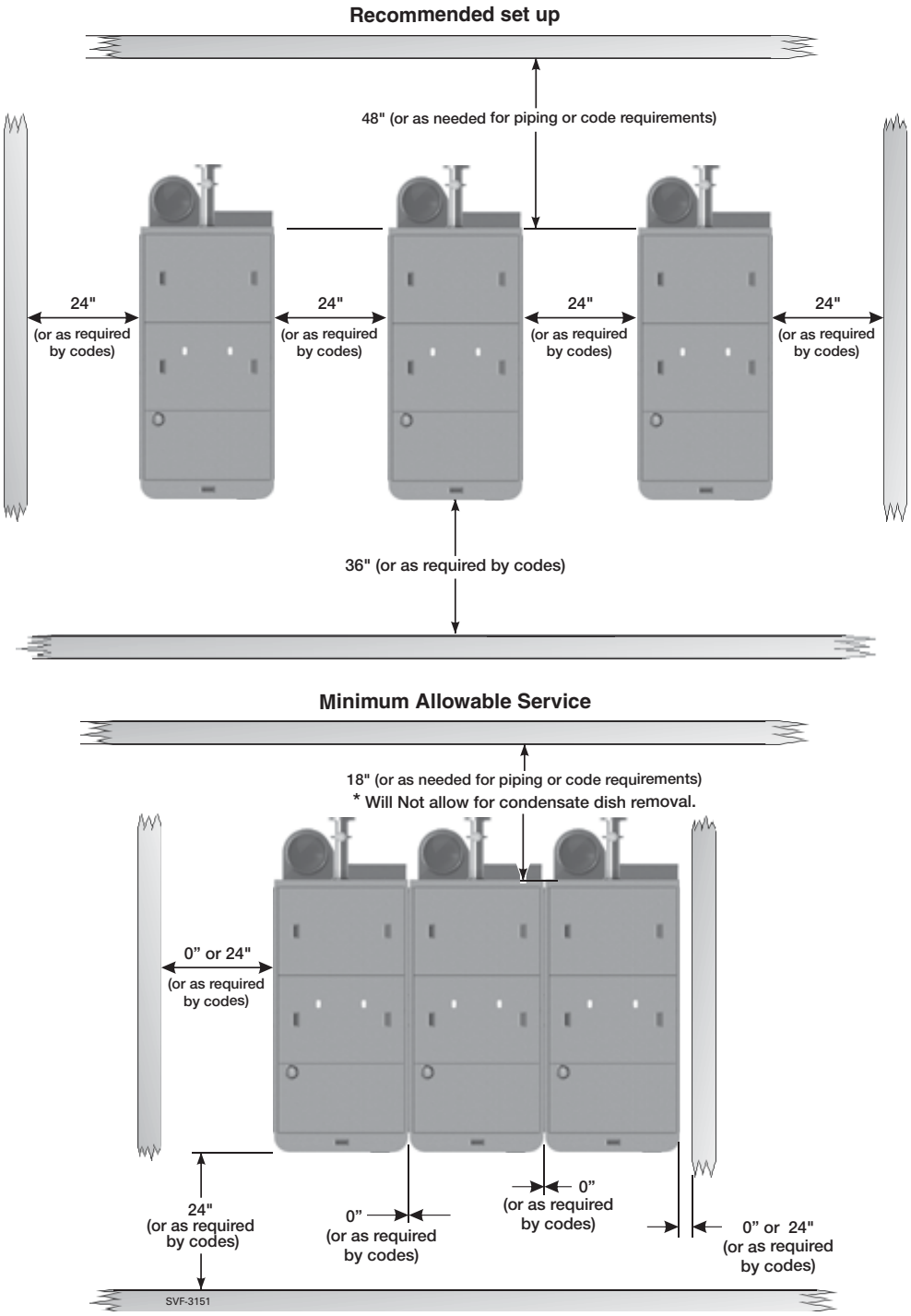

Prepare boiler

Provide air openings to room

Air openings — General

Follow the National Fuel Gas Code - ANSI Z223.1/NFPA54 – latest edition (U.S.) or Natural Gas and Propane Installation Code - CAN/CSA B149.1 (Canada) and all applicable codes to size/verify size of the combustion/ventilation air openings into the space. See the venting instructions section of this manual for required air openings and sizing for either direct vent or direct exhaust installation.

Air openings — *SVF*™ boiler alone in boiler room

1. **DIRECT VENT —** For direct vent installations (air piped to boiler), no air ventilation openings into boiler room are needed if clearances around the boiler are at least equal to the SERVICE clearances shown in Figure 2, page 7. For spaces that DO NOT supply the minimum service access clearances, see the direct vent venting instructions in this manual for required openings, see page 38.
2. **DIRECT EXHAUST —** For direct exhaust installations (combustion air from inside, see page 32), provide air openings as specified in the direct exhaust venting section of this manual.

Air openings — *SVF*™ boiler in same room with other gas or oil-fired appliances

1. **DIRECT VENT —** For direct vent installations (combustion air piped to boiler), size openings only on the basis of the other appliances in the space. No additional air opening free area is needed for the ***SVF***™ boiler because it takes its combustion air from outside.

⚠WARNING For direct vent installations, when the boiler is located in the same room as other appliances, provide combustion air openings correctly sized for all appliances in the room except the ***SVF***™ boiler.

Failure to comply with the above warnings could result in severe personal injury, death or substantial property damage.

2. **DIRECT EXHAUST —** For direct exhaust installations, combustion air openings into the room must be sized to handle the ***SVF***™ boiler and all other appliances. See the direct exhaust venting instructions in this manual for required openings.

   The boiler control has the ability to operate a combustion air damper. Refer to the "Aux/Pump Output" in the controls section.

⚠WARNING **Direct exhaust installations** — On direct exhaust installations, the boiler draws combustion air from the boiler room. If other appliances are installed in the same room, provide combustion air openings correctly sized for **ALL** appliances, including the ***SVF***™ boiler.

Failure to comply with the above warnings could result in severe personal injury, death or substantial property damage.

Vent and air piping requirements

(starting on page 24 through page 45)

1. The ***SVF***™ boiler requires a special vent system.
   - ***a.*** ***SVF***™ boilers are ANSI Z21.13 rated as Category II , see page 29.
     (negative pressure vent, likely to condense in the vent).

     Direct-exhaust — vent to the outside, combustion air from inside.

   - ***b.*** ***SVF***™ boilers are ANSI Z21.13 rated as Category IV, see page 38.
     (positive pressure vent, likely to condense in the vent).

     SVF™ commercial boilers can be either:
     Direct-exhaust — vent to the outside, combustion air from inside or . . .
     Direct-vent — both vent and air piped outside.

   - c. See instructions beginning on page 24 for vent/air configuration options and installation requirements.
2. Note "Prevention of combustion air contamination" on page 26 when considering vent/air terminations and boiler room conditions when using inside air (direct exhaust installation).
3. Be sure to locate the boiler such that the vent and air piping can be routed through the building and properly terminated. The vent/air piping lengths, routing and termination method must all comply with the methods and limits in instructions beginning on page 31.
4. Also locate the boiler such that you have the ability to inspect the vent pipes for leaks or any signs of deterioration. Repair or replace as necessary. Inspect and replace any existing vent pipes before installing boiler.

Prepare boiler *(continued)*

CAUTION **Cold weather handling** — If boiler has been stored in a very cold location (below 32°F) before installation, handle with care until the plastic components come to room temperature.

WARNING **The boiler is heavy**. Use caution not to drop the boiler or cause bodily injury while lifting and handling.

WARNING **Boiler supply, return and gas pipes** — Do not lift or handle the boiler by the water or gas pipes. Do not push on or apply weight to the pipes. Severe damage can be done to the boiler.

CAUTION Leave the **plastic covers** on the supply and return connections and on the boiler vent and air adapters until ready to attach piping. This will protect the fittings surfaces from damage and prevent debris from falling into the vent or air adapter.

Uncrating the boiler

WARNING Do not drop the boiler. Damage to boiler components can result. Leave the boiler on the crate pallet until ready to place in final location. Follow all uncrating instructions.

Failure to comply could result in severe personal injury, death or substantial property damage.

1. See Figure 4 for the following.
2. Move the crate to a solid, level surface.
3. There must be room (the length of the boiler plus 76" for ramp) at the piping end to place the ramp and roll the boiler down off the crate pallet.
4. Make sure the crate is sitting securely.
5. Remove the ramp from the crate and place the end of the ramp into the notch in the pallet as shown in Figure 4.
6. Follow the uncrating instruction label to secure the ramp to the pallet.
7. Remove the sixteen (16) screws and lag bolts from the eight (8) shipping brackets.

WARNING The boiler is heavy. Use caution when rolling down ramp. Potential bodily injury or boiler damage could be caused while handling. The boiler should be unloaded from the pallet on to a solid, level surface.

Moving/handling the boiler

WARNING **When moving the boiler, apply pressure ONLY at the jacket corner posts or water manifolds.**

Figure 4 *SVF*™ **2500** boiler on pallet, with ramp in position

WARNING **The boiler is heavy**. Use caution when rolling down ramp. Potential bodily injury or boiler damage could be caused while handling. The boiler should be unloaded from the pallet onto a solid, level surface.

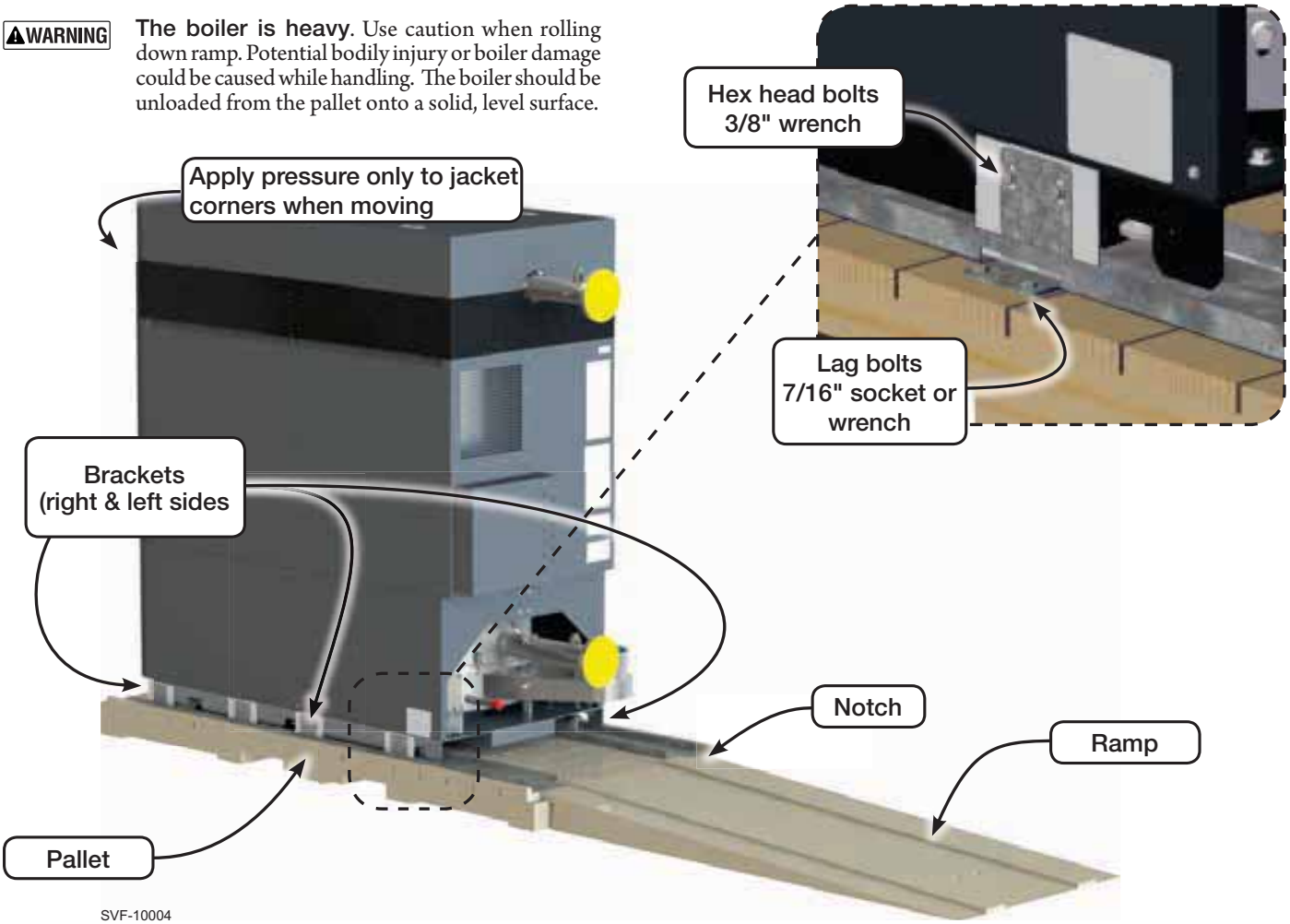

Prepare boiler *(continued)*

Placing the boiler

1. Roll the boiler down the ramp and move the boiler into position.
2. The piping end casters are swivel type. The piping and front end casters are swivel, middle casters are fixed.
3. Adjust the leveling legs down until they are firmly in contact with the floor. You will have to remove jacket panels to access bolt heads and jam nuts for leveling boiler.
4. Continue adjusting the legs down until all the bottom of the boiler base is 1½ inches minimum above the floor.

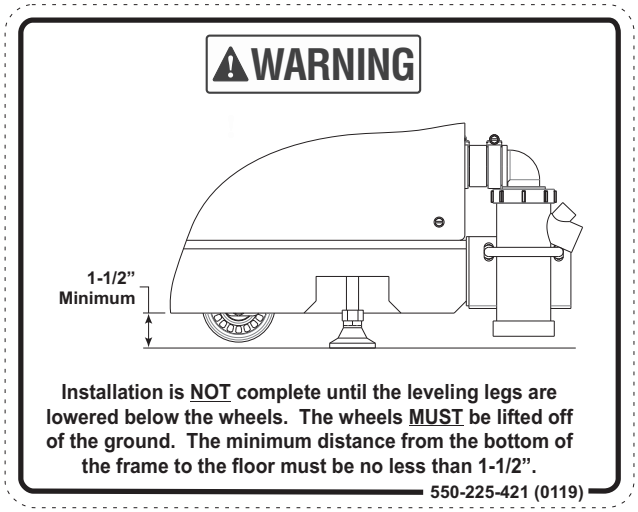

5. Extend leveling legs further as needed until the boiler is level. Check level, front to back as well as side to side. Measure level on cover plate.

CAUTION The boiler should not be allowed to rest on the casters. These are intended for moving the boiler into position only. The support legs must be extended to take the load of the boiler.

Bolting the boiler to mounting blocks

1. For applications requiring that the boiler be bolted down (such as earthquake zone requirements), use leveling legs to position boiler at the appropriate height for the external restraints bolted to the boiler frame.
2. See Figure 5 for details.
3. There are twenty-eight (28) holes in seven (7) brackets for mounting blocks with 3/8" bolts or anchors.

CAUTION The mounting blocks must position the boiler with at least 1½ inches minimum between the bottom of the boiler base and the floor.

WARNING Follow all applicable codes and recognized engineering design practices to verify that the final mounting will meet all seismic, structural and other requirements.

Figure 5 Seimic mounting brackets (provided by others)

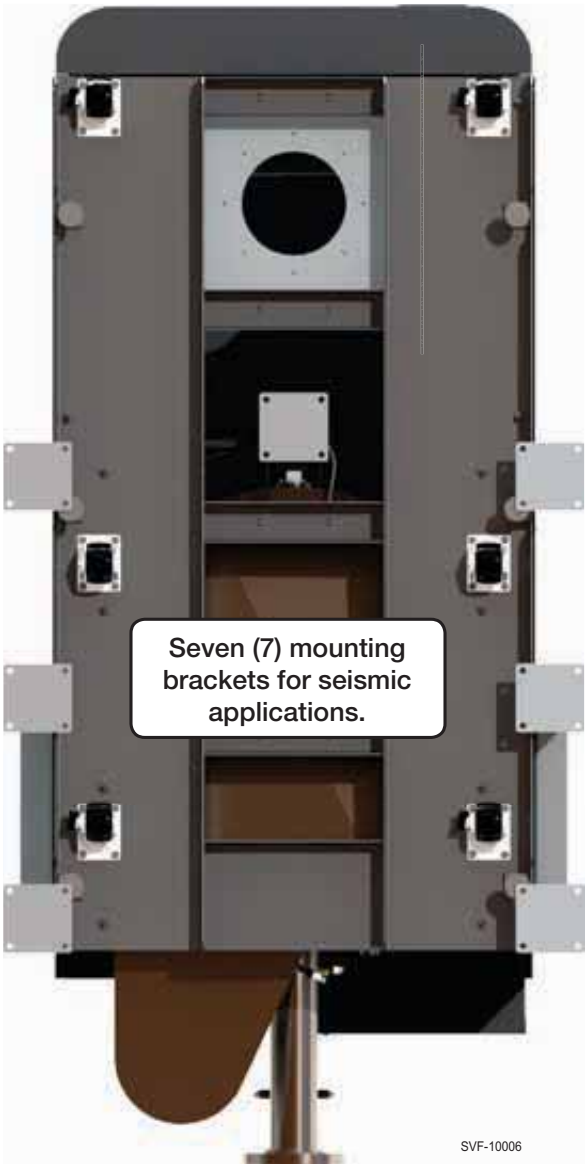

Prepare boiler *(continued)*

Prepare boiler for propane (when required)

WARNING ***SVF***™ **boilers must be converted for propane operation — all boilers are shipped ready for natural gas operation, and must be fitted with a propane orifice to be used on propane.**

High altitude installations

The standard propane orifice is required for high-altitude installations. The Control automatically adjusts boiler operation for altitude when set properly. Select "**YES**" in the Control setup for the **High Altitude** option (see Figure 67, page 75).

Verify orifice size

Verify when installing the propane orifice that the orifice size marking matches boiler size. See below.

Converting existing natural gas-fired boiler for propane

For a boiler already installed, you must turn off gas supply, turn off power and allow boiler to cool. Follow the Natural gas to LP conversion procedure below.

Verify operation after conversion

You must completely test the boiler after conversion to verify performance. Start up the boiler following instructions in this manual and the start-up procedure to check combustion levels.

Failure to comply with the above could result in severe personal injury, death or substantial property damage.

Propane conversion procedure

WARNING **If boiler is already installed** — You must turn off electrical supply to the boiler and close the external manual gas shut-off valve to isolate the boiler during conversion. Allow the boiler to cool if it has been operating. Following conversion of an installed boiler, follow all instructions in this manual to start up the boiler and verify operation of the boiler and all system components.

Natural gas Conversion to Propane

1. Locate propane orifice disk from conversion kit bag shipped with boiler in the envelope assembly.
2. Verify that the stamping on the orifice disk is correct for model size:
   a. One orifice for SVF 1500/2000/2500/3000
   b. Orifice size = 0.660".
3. Remove left front side panel, lift up and out.
4. Remove the gas manifold, between gas valve and mixing system.
   a. Remove the four (4) M5 bolts attaching the manifold to the mixing system/blower with a 7mm Allen wrench.
   b. Remove the four (4) M8 bolts attaching the manifold to the gas valve with a 13mm socket or wrench.
5. Inspect the gas valve O-ring. If damaged, replace with new.
6. Inspect the mixing system/blower O-ring. If damaged, replace with new.
7. Install Propane orifice in groove.

Figure 6 Propane orifice location

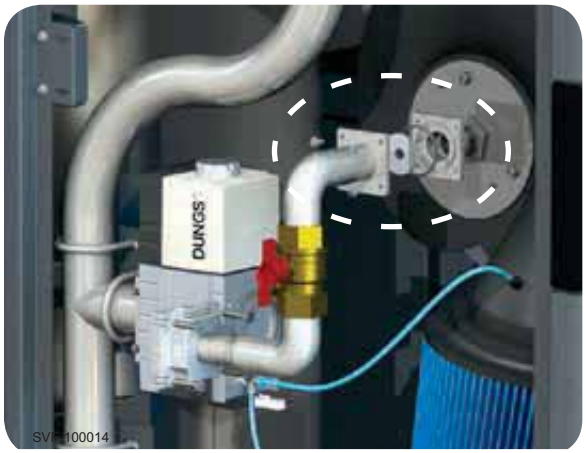

8. Reinstall the ball valve manifold.
   a. Ensure the gas valve and blower O-rings are in place!
   b. Install the four (4) M5 attaching the manifold to the mixing system/blower with a 7mm Allen wrench.
   c. Install the four (4) M8 bolts attaching the manifold to the gas valve with a 13mm socket or wrench.
9. Ensure flanges are flat to mounting surfaces and seals with no gaps.
10. Reconnect power.
11. Change control to LP settings in either the Wizard or in the boiler settings menu.
12. Start up, test, and adjust boiler as stated on page 88, Check flame & combustion adjustments.
13. Apply conversion label next to rating label.

Boiler relief valve and P/T gauge

WARNING **DO NOT install a relief valve with a pressure higher than 160 PSIG**. This is the maximum allowable relief valve setting for the ***SVF***™ boiler. The boiler is shipped with a 30 PSIG relief valve. See Replacement parts in the back of this manual for alternate pressure setting relief valves.

NOTICE The boiler is shipped with a ¼" NPT pressure and temperature gauge which has a pressure range up to 75 psig. This gauge meets ASME requirements up to a relief valve setting of 50 psig. For higher pressure rated relief valves, a different pressure and temperature gauge with a higher pressure range is required. When installing a gauge that requires a larger tapping than the ¼" NPT tapping in the boiler supply manifold, provide an additional tapping in the near boiler piping BEFORE any isolation valve.

Perform hydrostatic pressure test

Pressure test boiler before permanently attaching water or gas piping or electrical supply.

NOTICE Each ***SVF***™ boiler is factory tested to 1½ times maximum allowable working pressure per ASME Section IV requirements.

WARNING A pressure test should be performed on site to 1½ times the pressure setting of the relief valve to be installed on the unit (45 psig for a 30-psig relief valve; 75 psig for a 50-psig relief valve; or 150 psig for a 100-psig relief valve; or 240 psig for a 160-psig relief valve).

Prepare boiler *(continued)*

Prepare boiler for pressure test

1. Do **Not** install the relief valve until pressure testing is finished.
2. See Figure 7, page 13 for reference in following steps. Use pipe dope sparingly.
3. At the boiler supply and return connections, temporarily attach blind flanges, with tapping for a nipple and valve as shown (flanges, valves, gaskets nipples supplied by installer).
4. Attach a water supply and hand pump to the lower valves.
5. Attach a drain line to the upper valve.
6. Remove the pressure and temperature gauge from the trim box shipped with the boiler or alternate pressure rating kit.
7. Remove the factory-installed plug from the ¼-inch tapping on the side of the boiler supply pipe.
8. Apply pipe dope to the P/T gauge and install in the ¼-inch tapping as shown.
9. Install plug on the relief valve nipple, ***SVF*** 1500/2000 – 1 ¼" FNPT and ***SVF*** 2500/3000 – 2" FNPT.
10. If pressure test will be conducted with a pressure over 160 psig the automatic air vent must be removed and a 1/2" NPT plug installed in its place.

Fill boiler and pressure test

1. Open the shutoff valves installed on the supply and return connections.
2. Allow water to flow into the bottom connection and air to flow out the top connection.
3. When water reaches the shutoff valve on top, allow water to flow long enough to ensure all air is out of the heat exchanger. Then close the upper shutoff valve.

⚠WARNING Ensure all air is purged out of heat exchanger before performing hydrostatic pressure test.

4. Close off the water supply and use hand pump to raise water pressure for testing.
5. The test pressure should be 1½ times the pressure setting of the relief valve to be installed on the boiler (45 psig for a 30-psig relief valve; 75 psig for a 50-psig relief valve; or 150 psig for a 100-psig relief valve; or 240 psig for a 160-psig relief valve).

⚠WARNING The test pressure MUST NOT exceed the maximum pressure on the P/T gauge. If test pressure will be higher than the maximum range of the P/T gauge, use a different gauge for the test or remove gauge and plug tapping.

6. Gradually apply pressure until test pressure is reached. Then close off the shutoff valve.
7. Hold at test pressure for 10 minutes.

⚠WARNING Do not leave boiler unattended. A cold water fill could expand and cause excessive pressure, resulting in severe personal injury, death or substantial property damage.

8. Make sure that constant gauge pressure has been maintained throughout test.
9. Check for leaks. Repair any leaks from threaded joints. If leaks are found in Heat Exchanger, please consult your Weil-McLain representative.
10. Slowly release pressure and drain.

⚠WARNING The release of high pressure water should be done in a safe matter. Failure to do so could resulting in severe personal injury, death or substantial property damage.

11. Re-install Automatic air vent and P/T gauge, if removed.

Figure 7 Hydrostatic test piping connections — flanges, valves and gaskets provided by installer (SVF 1500 shown)

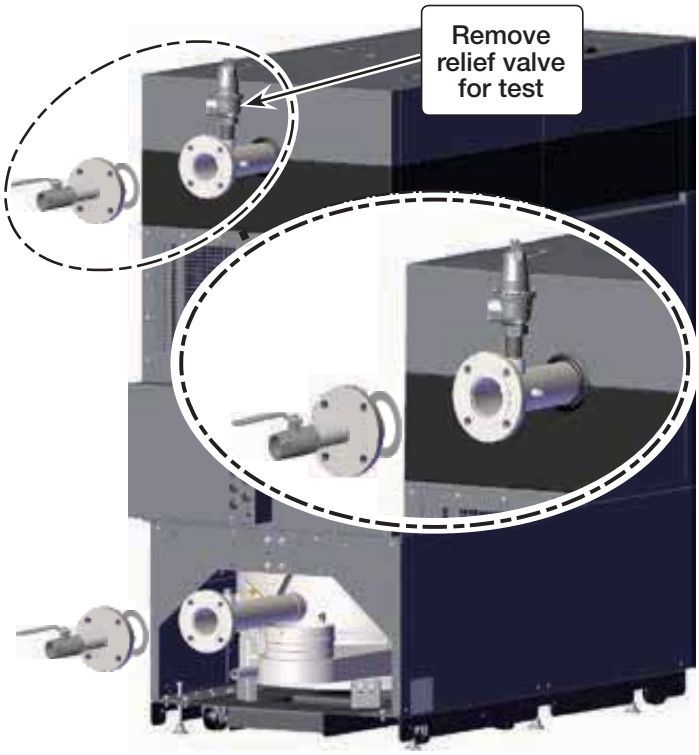

Boiler drain valve *(provided by installer)*

1. If not installing a drain valve off of the return piping, there are two (2) 1-½ FNPT connections for a boiler drain valve. (See Figure 8). One is lower front of the heat exchanger and second is on the piping end on the left side.

⚠WARNING **Leaks must be repaired at once.** Failure to do so can damage boiler, resulting in substantial property damage.

⚠WARNING **Do not use petroleum-based** cleaning or sealing compounds in boiler system. Gaskets and seals in the system may be damaged. This can result in substantial property damage.

Figure 8 Boiler drain location

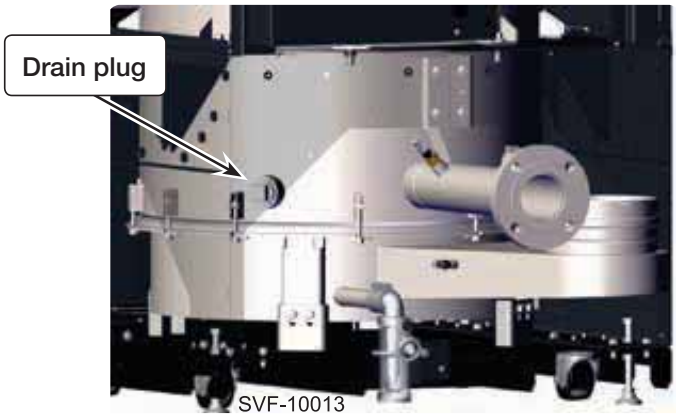

Install water piping

WARNING Use two wrenches when tightening water piping at boiler, using one of the wrenches to prevent the boiler interior piping from turning. Failure to support the boiler piping connections to prevent them from turning could cause damage to boiler components.

General piping information

Additional controls, when required

NOTICE The control module uses temperature sensors to provide both high limit protection and operating limit control, and is UL353 Limit Controls certified to meet ASME CSD-1 and Section IV requirements. The boiler is equipped with a low water cut-off and the manual reset is performed through the control module. Some codes/jurisdictions may require additional external controls.

- Operating limit set point = Supply Max. Temperature + Off differential

Additional limit controls

1. Consult local requirements for other codes/standards to determine if additional limit devices are needed.

WARNING **Multi-temperature systems** — If the heating system includes circuits that require lower temperature water (radiant slab circuits, for example) as well as higher temperature circuits, it is recommended to protect low-temperature circuits with limit controls that are wired to a manual or automatic reset circuit on the control.

2. See instructions beginning on page 49 for wiring information.
   a. The control provides two (2) sets of limit control contacts — one set will cause automatic reset and the other will cause manual reset of the control.
   b. The control can be reset using the manual RESET function on the control display.

Low water cutoff

1. A push-to-test low water cutoff is factory-installed in the boiler. The low water cutoff probe is mounted on the supply outlet pipe at the back of the boiler heat exchanger.
2. The low water cutoff is manual reset through the main control. This can be performed through the display by selecting MANUAL RESET.

Pressure/temperature gauge

Mount the pressure/temperature gauge (shipped loose with the boiler) in the ¼-inch port on the side of the boiler supply outlet pipe, one on each side is supplied.

NOTICE The boiler is shipped with a ¼" NPT pressure and temperature gauge which has a pressure range up to 75 psig. This gauge meets ASME requirements up to a relief valve setting of 50 psig. For higher pressure rated relief valves, a different pressure and temperature gauge with a higher pressure range is required. When installing a gauge that requires a larger tapping than the ¼" NPT tapping in the boiler supply manifold, provide an additional tapping in the near boiler piping BEFORE any isolation valve.

Backflow preventer

Use backflow check valve in water fill as required by local codes.

Install relief valve

1. Install relief valve (shipped loose with the boiler) in the (***SVF 1500/2000)*** 1¼ inch or (***SVF 2500/3000)*** 2-inch coupling on top of the boiler supply outlet pipe.
2. Connect discharge piping to safe disposal location, following guidelines in the **WARNING** below.

Installing relief valve

WARNING **DO NOT install a relief valve with a pressure higher than 160 PSIG**. This is the maximum allowable relief valve setting for the ***SVF***™ boiler. The boiler is shipped with a 30 PSIG relief valve. See Replacement parts in the back of this manual for alternate pressure setting relief valves.

To avoid water damage or scalding due to relief valve operation, as per local or state codes:

Discharge line must be connected to relief valve outlet and run to a safe place of disposal. Terminate the discharge line in a manner that will prevent possibility of severe burns or property damage should the valve discharge.

Discharge line must be as short as possible and be the same size as the valve discharge connection throughout its entire length.

Discharge line must pitch downward from the valve and terminate at least 6" above the floor drain where any discharge will be clearly visible.

The discharge line shall terminate plain, not threaded, with a material serviceable for temperatures of 375 °F or greater.

Do not pipe the discharge to any place where freezing could occur.

No shutoff valve shall be installed between the relief valve and boiler, or in the discharge line. Do not plug or place any obstruction in the discharge line.

Test the operation of the valve after filling and pressurizing system by lifting the lever. Make sure the valve discharges freely. If the valve fails to operate correctly, replace it with a new relief valve.

Failure to comply with the above guidelines could result in failure of the relief valve to operate, resulting in the possibility of severe personal injury, death or substantial property damage.

Install water piping *(continued)*

Recommended pipe sizing

WARNING **DO NOT design the piping and components for a boiler flow rate above or below** the ranges given in Figure 10 without using one of the piping strategies listed below. Insufficient flow will cause nuisance outages due to limit operation. Excessive flow can damage the boiler heat exchanger from erosion.

For systems with flow rates outside the range provided in Figure 10.

Higher flow rates:

- Use Primary/Secondary piping (see pages 17, 18, 21, 22 & 23).
- In a Variable/Primary flow system (see Figures 16, page 19 and Figure 17, page 20), a differential pressure by-pass valve should be added to by-pass the excessive flow, or provide an alternate engineered solution.

Lower flow rates:

- Use Primary/Secondary piping (see pages 17, 18, 21, 22 & 23).
- In a Variable/Primary flow system (see Figures 16, page 19 and Figure 17, page 20), a flow switch is recommended to be installed and set at the boilers minimum flow rate. This will prevent the boiler from firing with a flow rate that is too low. Once the system load increases the resultant higher water flow will make the flow switch.

Figure 9 Boiler head loss vs flow rate for ***SVF***™ boilers

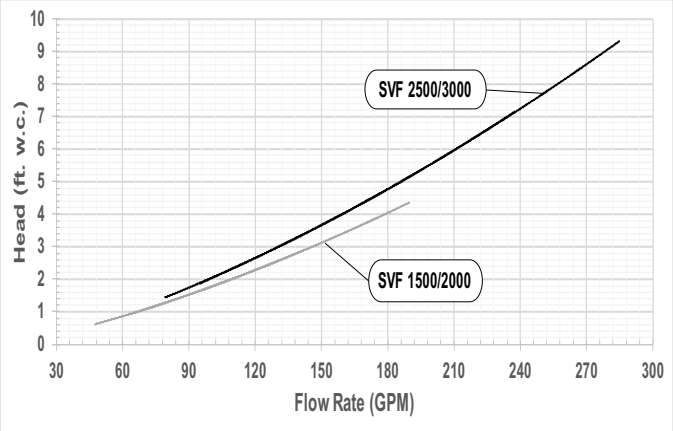

Figure 10 Flow rate and pressure drop data for ***SVF***™ boilers

***SVF* 1500**			
Minimum Water Pressure	GPM	100% Rate Temperature Rise (°F)	Boiler head loss (Feet w.c.)
10 PSI	146	20	3.0
	116	25	2.2
	97	***30**	**1.7**
	83	35	1.4
	73	40	1.1
15 PSI	65	45	1.0
	58	50	0.8
	53	55	0.7
	49	60	0.6
	—	—	—
	—	—	—

***SVF* 2000**			
Minimum Water Pressure	GPM	100% Rate Temperature Rise (°F)	Boiler head loss (Feet w.c.)
10 PSI	190	20	4.4
	152	25	3.2
	127	***30**	**2.5**
	109	35	2.0
	95	40	1.6
15 PSI	84	45	1.4
	76	50	1.2
	69	55	1.0
	63	60	0.9
	54	****70**	0.7
	51	****75**	0.7

* Suggested design flow rate (30°F temp. rise, water only).

** Notice: The ***SVF 1500/2000*** control will reduce the firing rate when the temperature rise exceeds 60°F, **at 68°F it will turn off the burner**. For modulating pumps a minimum flow rate of 49 gpm can be used, but the variable speed pump must be controlled to increase flow rate between minimum and full firing rate.

***SVF* 2500**			
Minimum Water Pressure	GPM	100% Rate Temperature Rise (°F)	Boiler head loss (Feet w.c.)
10 PSI	242	20	7.4
	194	25	5.3
	162	***30**	**4.1**
	139	35	3.3
	121	40	2.7
15 PSI	108	45	2.3
	97	50	1.9
	88	55	1.7
	75	****65**	1.3
	—	—	—
	—	—	—

***SVF* 3000**			
Minimum Water Pressure	GPM	100% Rate Temperature Rise (°F)	Boiler head loss (Feet w.c.)
10 PSI	285	20	9.3
	228	25	6.7
	190	***30**	**5.2**
	163	35	4.1
	143	40	3.4
15 PSI	127	45	2.9
	114	50	2.5
	104	55	2.1
	95	60	1.9
	81	****70**	1.5
	76	****75**	1.4

* Suggested design flow rate (30°F temp. rise, water only).

** Notice: The ***SVF 2500/3000*** control will reduce the firing rate when the temperature rise exceeds 60°F, **at 68°F it will turn off the burner**. For modulating pumps a minimum flow rate of 75 gpm can be used, but the variable speed pump must be controlled to increase flow rate between minimum and full firing rate.

Install water piping *(continued)*

Recommended pipe sizing (continued)

WARNING Temperature rises shown apply to water only. For glycol/water applications, the temperature rise will be different, but the flow rate must be maintained within the range listed. Contact the glycol supplier for calculating new temperature rises.

Size the piping and the pumps to provide the required temperature rise. See Figure 9 for boiler head loss curves. See Figure 10 for maximum and minimum flow rate through the boiler as well as head loss vs flow rate.

Size system piping following Figure 11 or apply recognized engineering practices to size the piping.

CAUTION **NOTE 1:** Pipe sizing should be based on the desired temperature rise for the system, corresponding to the recommended maximum flow rate. Failure to follow these guidelines could result in system problems.

Figure 11 Recommended pipe sizing vs flow rate

Sch 40 Pipe Diameter	Maximum Flow rate GPM	Sch 40 Pipe Diameter	Maximum Flow rate GPM
2	45	6	800
3	140	8	1650
4	290	10	3000
5	500	12	4750

NOTICE The ***SVF*** boilers have 3" class 150 connections, provide reducers to adapt from external piping to the boiler supply and return flanged connections.

Expansion tank and make-up water

1. Ensure expansion tank size will handle boiler and system water volume and temperature. See page 120 for boiler water content.

CAUTION Undersized expansion tanks cause system water to be lost from relief valve and make-up water to be added through fill valve. Eventual boiler failure can result due to excessive make-up water addition.

2. Tank must be located as shown in this manual, or following recognized design methods. See tank manufacturer's instructions for details.
3. Connect the expansion tank to the air separator only if the separator is on the suction side of the pump. Always install the system fill connection at the same point as the expansion tank connection to the system.
4. Most piping drawings in this manual show diaphragm expansion tanks. See Figure 12 for piping from air separator to expansion tank and make-up water line using a closed-type expansion tank.
5. Most chilled water systems are piped using a closed-type tank, as shown in Figure 20, page 23.

Diaphragm (or bladder) expansion tank

1. (Figure 12) Always install an automatic air vent on top of the air separator to remove residual air from the system.

NOTICE When using diaphragm or bladder tanks only — when the boiler is installed above the system main piping, install an automatic air vent in the top of the outgoing boiler piping to prevent air pocketing.

NOTICE The expansion tank needs to be pre-charged to the required system fill pressure before being connected to the system.

Closed-type expansion tank

1. See Figure 13, Alternate, for piping connections when using a closed-type expansion tank.
2. Pitch any horizontal piping up towards tank 1 inch per 5 feet of piping. Connect to tank with at least ¾" piping to allow room for air to rise.

CAUTION DO NOT install automatic air vents on closed-type expansion tank systems. Air must remain in the system and return to the tank to provide its air cushion. An automatic air vent would cause air to leave system, resulting in water-logging the expansion tank.

Figure 12 Expansion tank piping — diaphragm-type expansion tank

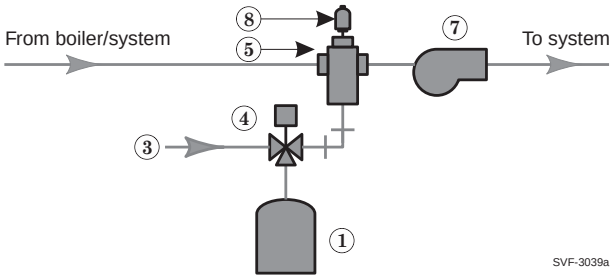

Figure 13 Expansion tank piping — closed-type expansion tank

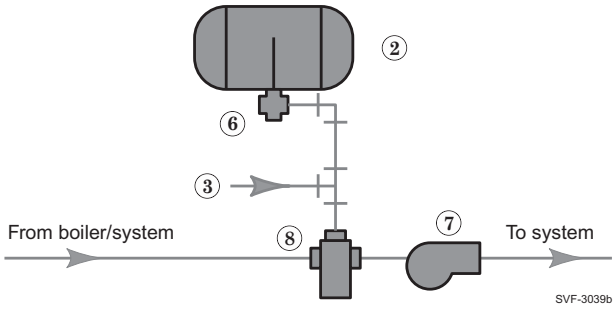

1 Diaphragm-type expansion tank.
2 Closed-type expansion tank.
3 Make-up water line.
4 Fill valve, typical.
5 Air separator.
6 Tank fitting.
7 System pump (when used).
8 Automatic air vent.

Install water piping *(continued)*

ZONE VALVE zoning – primary/secondary

(Shown with optional DHW piping) See Figure 14.

This configuration is for zone valve systems using a boiler loop connected as a secondary circuit off of a primary system loop. The primary/secondary piping shown ensures the boiler loop will have sufficient flow. It also avoids applying the high head of the boiler circulator to the zone valves.

1. Install a system circulator (supplied by installer) capable of delivering the proper flow and head as shown.
2. The flow/check valve shown on the boiler outlet piping prevents gravity circulation in the boiler loop during DHW heating.

CAUTION Use **at least** the **MINIMUM** pipe size shown in Figure 11, page 16 on all boiler loop piping (connecting boiler to and from the primary/secondary connection, item 21). **Primary/secondary piping shown** ensures the boiler loop will have sufficient flow. For other piping methods, see guidelines starting on page 15.

Expansion Tank required

1. Provide a system expansion tank following the guidelines on page 16.
2. **DO NOT** use a closed-type tank if connecting to a water heater that is equipped with an automatic vent.

Domestic Hot Water (DHW) tank, if used

1. DHW direct connection—Pipe from the near-boiler piping to the DHW tank's boiler connections as shown.
2. DHW as zone—A DHW tank can be connected as a zone if a DHW tank is **NOT** already connected to the boiler. See Advanced Manual to configure Boiler Pump to run during DHW demands and change TARGET MOD SENSOR to System Supply.
3. System Priority choices:
   a. DHW Priority – DHW is priority over space heating. Use Priority 1 for DHW; Priorities 2 and/or 3 for space heating. The control will not run multiple priorities simultaneously.
   b. Space Heating Priority – Space heating is priority over DHW. Use Priorities 1 and/or 2 for space heating; Priority 3 for DHW. The control will not run multiple priorities simultaneously.
   c. No Priorities – Space heating and DHW can occur simultaneously at same Supply Max. temperature. Use only if DHW is a zone in system. Assign DHW and Space heating to same Priority. Do not use outdoor reset for this application.

Controlling the circulators

1. The control can control up to four circulators (boiler circulator and three others). Refer to Field wiring, beginning on page 59, for instructions on wiring to circulators.
2. The factory default settings are: all three inputs are set up for Space Heating (Priority 2). Each input correlates to its respective circulator output. For DHW applications, assign DHW inputs to determined Priority (1, 2 or 3). Priority 1 is defaulted to DHW for DHW Priority applications.
3. For more than 3-zones, use Weil-McLain WMZV zone valve controller.

Figure 14 Zone valve zoning plus optional DHW piping

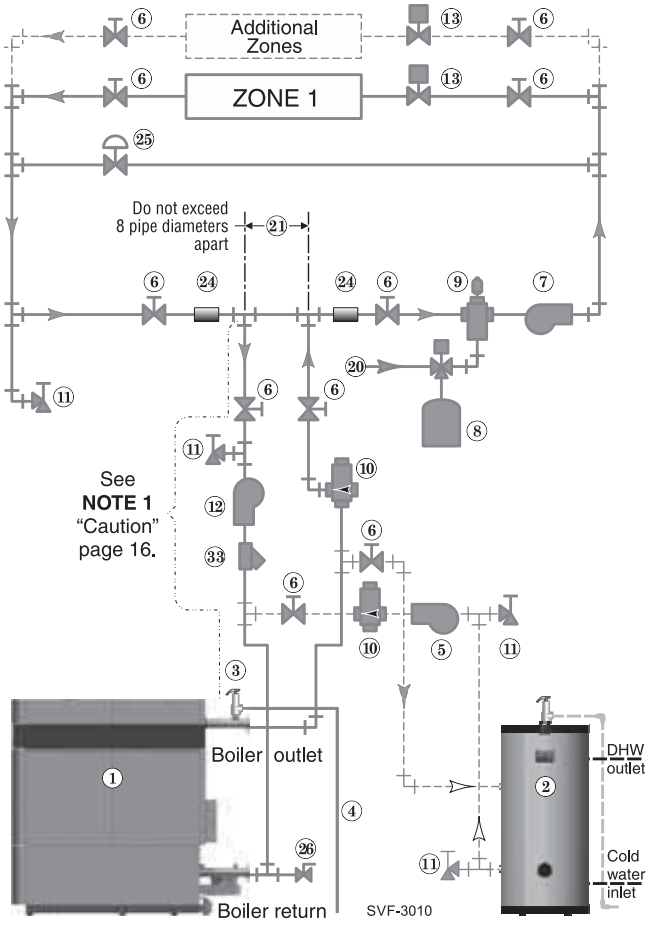

NOTICE Connect zone valve end switches to a Space Heating Priority input, (default Priority 2) to use default settings. Connect system circulator to corresponding output.

CAUTION Use isolation relays if connecting 3-wire zone valve end switches to the inputs.

Legend — Figure 14

1	*SVF*™ boiler	11	Purge/drain valves
2	Indirect water heater (DHW), if used	12	Boiler circulator
3	Boiler relief valve (see page 14 for piping details)	13	Zone valves, typical
4	Relief valve discharge piping (see page 14 for details)	20	Make-up water supply
5	DHW circulator	21	Primary/secondary connection (tees no more than 8 pipe diameters apart)
6	Isolation valves	24	System supply and return immersion sensors, at least 6 pipe diameters (but no more than 3 feet) from boiler connection tees.
7	System circulator (see information above for wiring)	25	Systems using high-head pumps may require a bypass pressure regulator to prevent damage to control valves.
8	Diaphragm (or bladder) type expansion tank (see page 16 for piping of closed-type expansion tank, if used)	26	External drain/blowdown valve, when used.
9	Air separator [with automatic air vent only on systems using diaphragm (or bladder) type expansion tank]	33	Strainer, recommended.
10	Flow/check valves		

Install water piping *(continued)*

Zoning with zone valves — alternate High-flow-rate/high-head-loss DHW circuits

See Figure 15.

This configuration is for applications requiring DHW circuit flow rates higher than allowable for the boiler, or for high pressure-drop coil-type DHW tanks, connect the piping as in Figure 15. The DHW water only flows through the secondary circuit connection piping. The primary/secondary piping shown ensures the boiler loop will have sufficient flow. It also avoids applying the high head of the boiler circulator to the zone valves.

1. Make sure to size the connection piping (Figure 15, item 23) to handle the total flow it must handle.
2. Install a system circulator (supplied by installer) capable of delivering the proper flow and head as shown.
3. The flow/check valve shown on the boiler outlet piping prevents gravity circulation in the boiler loop during DHW heating.

CAUTION Use **at least** the **MINIMUM** pipe size shown in Figure 11, page 16 on all boiler loop piping (connecting boiler to and from the primary/secondary connection, item 21). **Primary/secondary piping shown** ensures the boiler loop will have sufficient flow. For other piping methods, see guidelines starting on page 15.

Expansion Tank required

1. Provide a system expansion tank following the guidelines on page 16.
2. **DO NOT** use a closed-type tank if connecting to a water heater that is equipped with an automatic vent.

Domestic Hot Water (DHW) tank, if used

1. DHW direct connection—Pipe from the near-boiler piping to the DHW tank's boiler connections as shown. See Advanced Manual to configure Boiler Pump to run during DHW demands.
2. DHW as Zone – not applicable to this application.
3. System Priority choices:
   a. DHW Priority – DHW is priority over space heating. Use Priority 1 for DHW; Priorities 2 and/or 3 for space heating. The control will not run multiple priorities simultaneously.
   b. Space Heating Priority – Space heating is priority over DHW. Use Priorities 1 and/or 2 for space heating; Priority 3 for DHW. The control will not run multiple priorities simultaneously.
   c. No Priorities – Space heating and DHW can occur simultaneously at same Supply Max. temperature. Use only if DHW is a zone in system. Assign DHW and Space heating to same Priority. Do not use outdoor reset for this application.

Controlling the circulators

1. The control can control up to four circulators (boiler circulator and three others). Refer to Field wiring, beginning on page 59, for instructions on wiring to circulators.

Figure 15 Zone valve zoning plus optional DHW piping

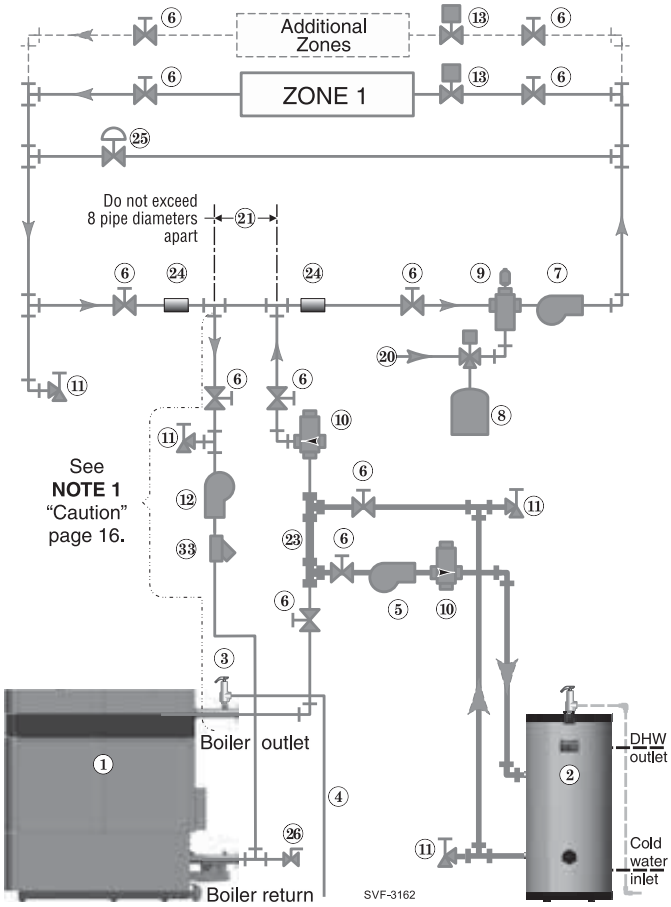

2. The factory default settings are: all three inputs are set up for Space Heating (Priority 2). Each input correlates to its respective circulator output. For DHW applications, assign DHW inputs to determined Priority (1, 2 or 3). Priority 1 is defaulted to DHW for DHW Priority applications.
3. For more than 3-zones, use Weil-McLain WMZV zone valve controller.

NOTICE Connect zone valve end switches to a Space Heating Priority input, , (default Priority 2) to use default settings. Connect system circulator to corresponding output.

CAUTION Use isolation relays if connecting 3-wire zone valve end switches to the inputs.

Legend — Figure 15

1	*SVF*™ boiler	11	Purge/drain valves
2	Indirect water heater (DHW), if used	12	Boiler circulator
3	Boiler relief valve (see page 14 for piping details)	13	Zone valves, typical
4	Relief valve discharge piping (see page 14 for details)	20	Make-up water supply
5	DHW circulator	21	Primary/secondary connection (tees no more than 8 pipe diameters apart)
6	Isolation valves	23	DHW secondary connector piping — no more than 8 pipe diameters apart.
7	System circulator (see information above for wiring)	24	System supply and return immersion sensors, at least 6 pipe diameters (but no more than 3 feet) from boiler connection tees.
8	Diaphragm (or bladder) type expansion tank (see page 16 for piping of closed-type expansion tank, if used)	25	Systems using high-head pumps may require a bypass pressure regulator to prevent damage to control valves.
9	Air separator [with automatic air vent only on systems using diaphragm (or bladder) type expansion tank]	26	External drain/blowdown valve, when used.
10	Flow/check valves	33	Strainer, recommended.

Install water piping *(continued)*

ZONE VALVE zoning - Variable Primary Flow

See Figure 16.

This configuration is for applications that use a variable flow system pump.

1. Install a system circulator (supplied by installer) capable of delivering the necessary variable flow and head as shown.
2. A bypass with a differential pressure valve or pressure reducing valve may optionally be used between the near boiler supply and return piping in high flow systems. If used, ensure the System Supply Temperature sensor is placed AFTER the bypass.
3. A flow switch is recommended if system flow could drop below the minimum flow specified on page 15 in Figure 10. A 1"FNPT connection is located on the boiler return pipe.

Expansion Tank required

1. Provide a system expansion tank following the guidelines on page 16.
2. **DO NOT** use a closed-type tank if connecting to a water heater that is equipped with an automatic vent.

Domestic Hot Water (DHW) tank, if used

1. DHW as a zone – A DHW tank can be connected as a zone if a DHW tank is NOT already connected to the boiler. See Advanced Manual to configure Boiler Pump to run during DHW demands and change TARGET MOD SENSOR to System Supply.
2. System Priority choices:
   a. DHW Priority – DHW is priority over space heating. Use Priority 1 for DHW; Priorities 2 and/or 3 for space heating. The control will not run multiple priorities simultaneously.
   b. Space Heating Priority – Space heating is priority over DHW. Use Priorities 1 and/or 2 for space heating; Priority 3 for DHW. The control will not run multiple priorities simultaneously.
   c. No Priorities – Space heating and DHW can occur simultaneously at same Supply Max temperature. Use only if DHW is a zone in system. Assign DHW and Space heating to the same Priority. Do not use outdoor reset for this application.

Controlling the circulators

1. The control can control up to four circulators (boiler circulator and three others). Refer to Field wiring, beginning on page 59, for instructions on wiring to circulators.
2. The factory default settings are: all three inputs are set up for Space Heating (Priority 2). Each input correlates to its respective circulator output. For DHW applications, assign DHW inputs to determined Priority (1, 2, or 3). Priority 1 is defaulted to DHW for DHW Priority applications.
3. For more than 3 zones, use Weil-McLain WMZV zone valve controller.

Figure 16 Variable Primary Flow, DHW as Zone

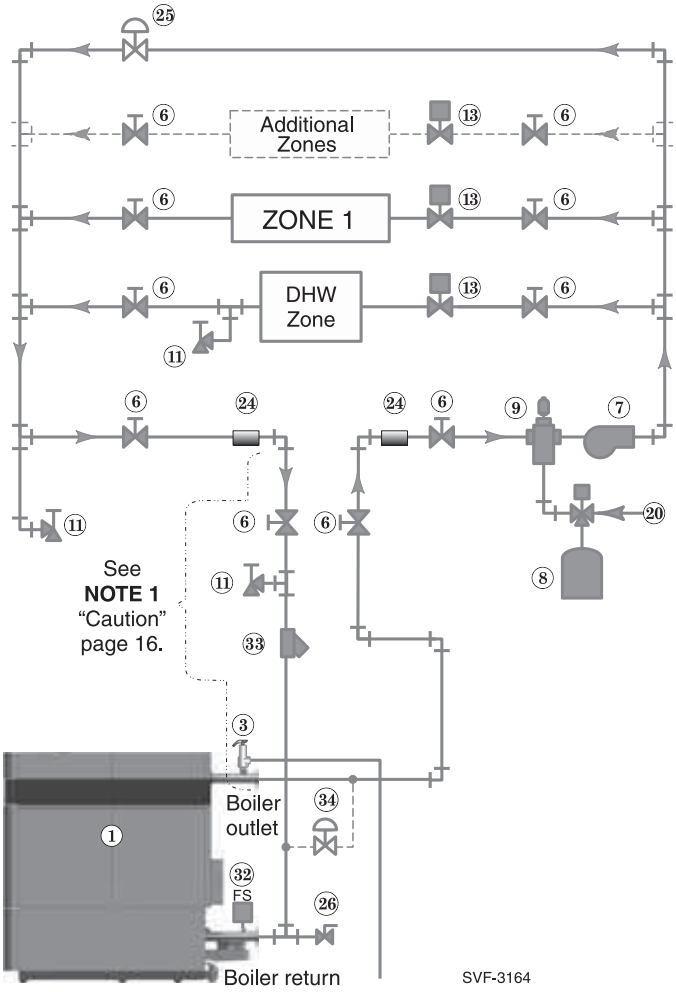

Legend — Figure 16	
1 *SVF*™ boiler	13 Zone valves, typical
2 Indirect water heater (DHW), if used	20 Make-up water supply
3 Boiler relief valve (see page 14 for piping details)	21 Primary/secondary connection (tees no more than 8 pipe diameters apart).
4 Relief valve discharge piping (see page 14 for details)	23 DHW secondary connector piping — no more than 8 pipe diameters apart.
5 DHW circulator	24 System supply and return immersion sensors, at least 6 pipe diameters (but no more than 3 feet) from boiler connection tees.
6 Isolation valves	25 Systems using high-head pumps may require a bypass pressure regulator to prevent damage to control valves.
7 System circulator (see information above for wiring)	26 External drain/blowdown valve, when used.
8 Diaphragm (or bladder) type expansion tank (see page 16 for piping of closed-type expansion tank, if used)	32 Flow switch, by others
9 Air separator [with automatic air vent only on systems using diaphragm (or bladder) type expansion tank]	33 Strainer, recommended.
10 Flow/check valves	34 High flow systems may require a bypass pressure regulator/pressure reducing valve to prevent excessive flow in heat exchanger.
11 Purge/drain valves	
12 Boiler circulator	

Install water piping *(continued)*

ZONE VALVE zoning - Variable Primary Flow (Shown with optional DHW piping) See Figure 17.

This configuration is for applications that use a variable flow system pump.

1. Install a system circulator (supplied by installer) capable of delivering the necessary variable flow and head as shown.
2. The flow/check valve shown on the boiler outlet prevents gravity circulation in the boiler loop during DHW heating.
3. A bypass with a differential pressure valve may optionally be used between the near boiler supply and return piping in high flow systems. If used, ensure the System Supply Temperature sensor is placed AFTER the bypass.
4. A flow switch is recommended if system flow could drop below the minimum flow specified on page 15 in Figure 10. A 1"FNPT connection is located on the boiler return pipe.

Expansion Tank required

1. Provide a system expansion tank following the guidelines on page 16.
2. **DO NOT** use a closed-type tank if connecting to a water heater that is equipped with an automatic vent.

Domestic Hot Water (DHW) tank, if used

1. DHW direct connection – Pipe from the near-boiler piping to the DHW tank's boiler connections as shown. See Advanced Manual to configure Boiler Pump to run during DHW demands and change TARGET MOD SENSOR to System Supply.
2. System Priority choices:
   a. DHW Priority – DHW is priority over space heating. Use Priority 1 for DHW; Priorities 2 and/or 3 for space heating. The control will not run multiple priorities simultaneously.
   b. Space Heating Priority – Space heating is priority over DHW. Use Priorities 1 and/or 2 for space heating; Priority 3 for DHW. The control will not run multiple priorities simultaneously.
   c. No Priorities – Space heating and DHW can occur simultaneously at same Supply Max temperature. Use only if DHW is a zone in system (see previous page). Assign DHW and Space heating to the same Priority. Do not use outdoor reset for this application.

Controlling the circulators

1. The control can control up to four circulators (boiler circulator and three others). Refer to Field wiring, beginning on page 59, for instructions on wiring to circulators.
2. The factory default settings are: all three inputs are set up for Space Heating (Priority 2). Each input correlates to its respective circulator output. For DHW applications, assign DHW inputs to determined Priority (1, 2, or 3). Priority 1 is defaulted to DHW for DHW Priority applications.
3. For more than 3 zones, use Weil-McLain WMZV zone valve controller.

Figure 17 Variable Primary Flow

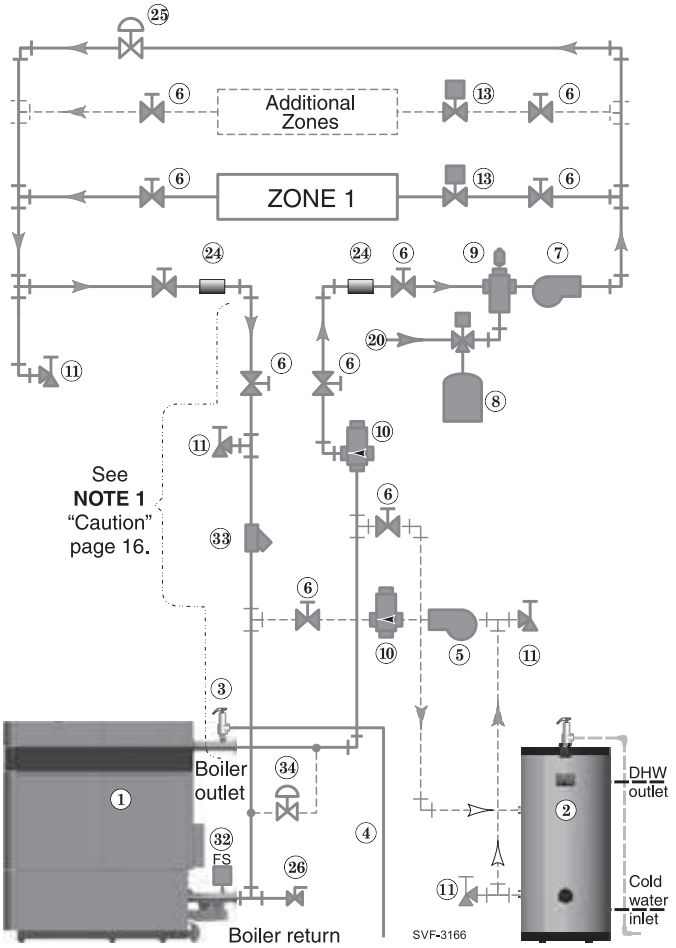

Legend — Figure 17	
1 *SVF*™ boiler	13 Zone valves, typical
2 Indirect water heater (DHW), if used	20 Make-up water supply
3 Boiler relief valve (see page 14 for piping details)	21 Primary/secondary connection (tees no more than 8 pipe diameters apart).
4 Relief valve discharge piping (see page 14 for details)	23 DHW secondary connector piping — no more than 8 pipe diameters apart.
5 DHW circulator	24 System supply and return immersion sensors, at least 6 pipe diameters (but no more than 3 feet) from boiler connection tees.
6 Isolation valves	25 Systems using high-head pumps may require a bypass pressure regulator to prevent damage to control valves.
7 System circulator (see information above for wiring)	26 External drain/blowdown valve, when used.
8 Diaphragm (or bladder) type expansion tank (see page 16 for piping of closed-type expansion tank, if used)	32 Flow switch, by others
9 Air separator [with automatic air vent only on systems using diaphragm (or bladder) type expansion tank]	33 Strainer, recommended.
10 Flow/check valves	34 High flow systems may require a bypass pressure regulator/pressure reducing valve to prevent excessive flow in heat exchanger.
11 Purge/drain valves	
12 Boiler circulator	

Install water piping *(continued)*

Circulator zoning – primary/secondary

(Shown with optional DHW piping) See Figure 18.

This configuration is for circulator-zoned systems using a boiler loop connected as a secondary circuit off of a primary system loop.

1. Install a separate circulator (supplied by installer) for each zone capable of delivering the proper flow and head as shown.
2. The flow/check valve shown on the boiler outlet piping prevents gravity circulation in the boiler loop during DHW heating.

⚠CAUTION Use **at least** the **MINIMUM** pipe size shown in Figure 11, page 16 on all boiler loop piping (connecting boiler to and from the primary/secondary connection, item 21). **Primary/secondary piping shown** ensures the boiler loop will have sufficient flow. For other piping methods, see guidelines starting on page 15.

Expansion Tank required

1. Provide a system expansion tank following the guidelines on page 16.
2. **DO NOT** use a closed-type tank if connecting to a water heater that is equipped with an automatic vent.

Domestic Hot Water (DHW) tank, if used

1. DHW direct connection—Pipe from the near-boiler piping to the DHW tank's boiler connections as shown.
2. DHW as zone—A DHW tank can be connected as a zone if a DHW tank is **NOT** already connected to the boiler. See Advanced Manual to configure Boiler Circulator to run during DHW demands and change TARGET MOD SENSOR to System Supply.
3. System Priority choices:
   a. DHW Priority – DHW is priority over space heating. Use Priority 1 for DHW; Priorities 2 and/or 3 for space heating. The control will not run multiple priorities simultaneously.
   b. Space Heating Priority – Space heating is priority over DHW. Use Priorities 1 and/or 2 for space heating; Priority 3 for DHW. The control will not run multiple priorities simultaneously.
   c. No Priorities – Space heating and DHW can occur simultaneously at same Supply Max. temperature. Use only if DHW is a zone in system. Assign DHW and Space heating to same Priority. Do not use outdoor reset for this application.

Controlling the circulators

1. The control can control up to four circulators (boiler circulator and three others). Refer to Field wiring, beginning on page 59, for instructions on wiring to circulators. The boiler circulator cannot be used for a zone pump.

Figure 18 Pump zoning plus optional DHW piping — primary/secondary piping

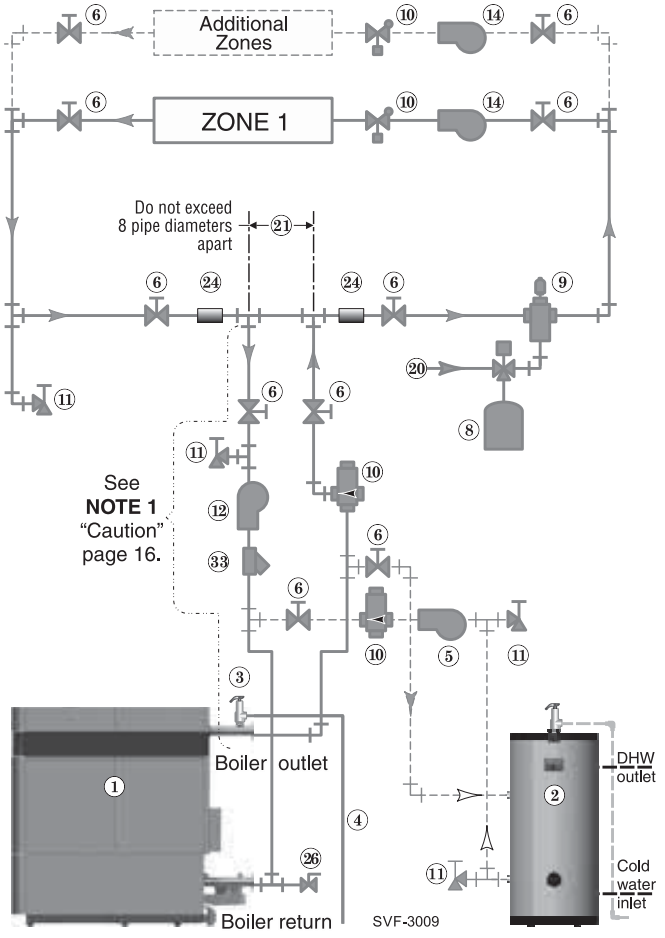

2. The factory default settings are: all three inputs are set up for Space Heating (Priority 2). Each input correlates to its respective circulator output. For DHW applications, assign DHW inputs to determined Priority (1, 2 or 3). Priority 1 is defaulted to DHW for DHW Priority applications.
3. For more than 3-zones, use Weil-McLain WMCR zone Circ. controller.

Legend — Figure 18

1	*SVF*™ boiler	10	Flow/check valves
2	Indirect water heater (DHW), if used	11	Purge/drain valves
3	Boiler relief valve (see page 14 for piping details)	12	Boiler circulator
4	Relief valve discharge piping (see page 14 for details)	14	Zone pumps, typical
5	DHW circulator	20	Make-up water supply
6	Isolation valves	21	Primary/secondary connection (tees no more than 8 pipe diameters apart)
8	Diaphragm (or bladder) type expansion tank (see page 16 for piping of closed-type expansion tank, if used)	24	System supply and return immersion sensors, at least 6 pipe diameters (but no more than 3 feet) from boiler connection tees.
9	Air separator [with automatic air vent only on systems using diaphragm (or bladder) type expansion tank]	26	External drain/blowdown valve, when used.
		33	Strainer, recommended.

Install water piping *(continued)*

Radiant Heating — Zone valve zoning – primary/secondary (Shown with optional DHW piping) See Figure 19.

The ***SVF***™ boiler is ideal for use in radiant heating. The unique heat exchanger design allows it to work well even in condensing mode. There is no need to regulate boiler return water temperature in radiant heating applications. The primary/secondary piping shown ensures the boiler loop will have sufficient flow. It also avoids applying the high head of the boiler circulator to the zone valves.

1. Apply this configuration for typical radiant heating applications.
2. Size the system piping and circulators to provide the flow and pressure drop needed.
3. The flow/check valve shown on the boiler outlet piping prevents gravity circulation in the boiler loop during DHW heating.

CAUTION Use **at least** the **MINIMUM** pipe size shown in Figure 11, page 16 on all boiler loop piping (connecting boiler to and from the primary/secondary connection, item 21). **Primary/secondary piping shown** ensures the boiler loop will have sufficient flow. For other piping methods, see guidelines starting on page 15.

High limit in system piping

1. Add the recommended high limit control (Figure 19, item 22) to help ensure supply water temperature will not exceed the maximum allowable for the radiant system.
2. Wire the limit control to either the manual reset or automatic reset external limit circuit of the Control.

Expansion Tank required

1. Provide a system expansion tank following the guidelines on page 16.
2. **DO NOT** use a closed-type tank if connecting to a water heater that is equipped with an automatic vent.

Domestic Hot Water (DHW) tank, if used

1. DHW direct connection—Pipe from the near-boiler piping to the DHW tank's boiler connections as shown.
2. DHW as zone— Not recommended for this application.
3. System Priority choices:
   a. DHW Priority – DHW is priority over space heating. Use Priority 1 for DHW; Priorities 2 and/or 3 for space heating. The control will not run multiple priorities simultaneously.
   b. Space Heating Priority – Space heating is priority over DHW. Use Priorities 1 and/or 2 for space heating; Priority 3 for DHW. The control will not run multiple priorities simultaneously.
   c. No Priorities – Space heating and DHW can occur simultaneously at same Supply Max. temperature. Use only if DHW is a zone in system. Assign DHW and Space heating to same Priority. Do not use outdoor reset for this application.

Controlling the circulators

1. The control can control up to four circulators (boiler circulator and three others). Refer to Field wiring, beginning on page 59, for instructions on wiring to circulators.

Figure 19 Typical radiant heating system piping plus optional DHW

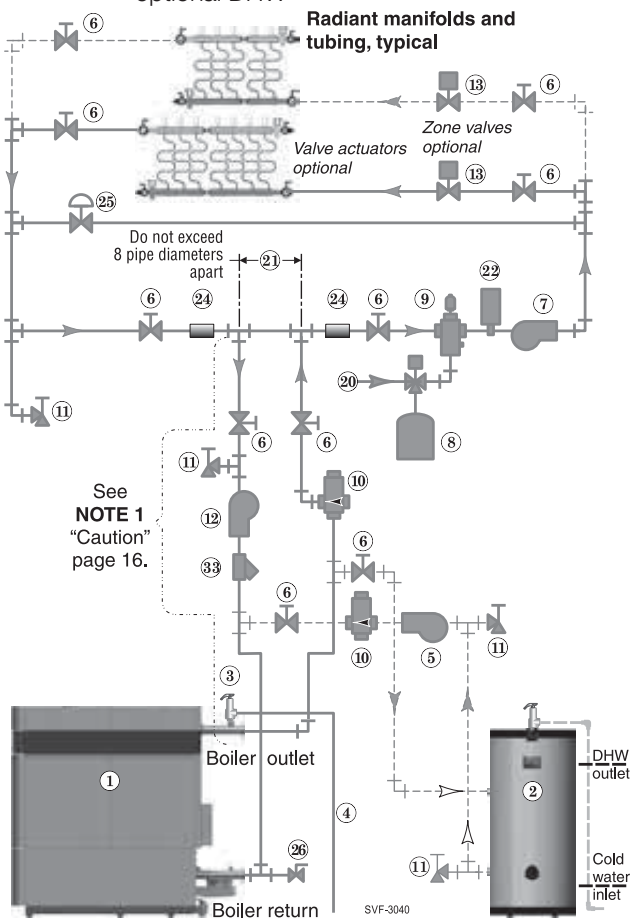

2. The factory default settings are: all three inputs are set up for Space Heating (Priority 2). Each input correlates to its respective circulator output. For DHW applications, assign DHW Input(s) to determined Priority (1, 2, or 3). Priority 1 is defaulted to DHW for DHW Priority applications.
3. For more than 3-zones, use Weil-McLain WMCR zone Circ controller.

NOTICE Connect zone valve end switches to a Space Heating Priority input, (default Priority 2) to use default settings Connect system circulator to corresponding output.

CAUTION Use isolation relays if connecting 3-wire zone valve end switches to the inputs.

Legend — Figure 19

1	***SVF***™ boiler
2	Indirect water heater (DHW), if used
3	Boiler relief valve (see page 14 for piping details)
4	Relief valve discharge piping (see page 14 for details)
5	DHW circulator
6	Isolation valves
7	System circulator (see information above for wiring)
8	Diaphragm (or bladder) type expansion tank (see page 16 for piping of closed-type expansion tank, if used)
9	Air separator [with automatic air vent only on systems using diaphragm (or bladder) type expansion tank]
10	Flow/check valves
11	Purge/drain valves
12	Boiler circulator
13	Zone valves, when used (zoning may also be done using manifold-mounted valve actuators).
20	Make-up water supply
21	Primary/secondary connection (tees no more than 8 pipe diameters apart)
22	Optional high limit temperature control, set to protect radiant tubing.
24	System supply and return immersion sensors, at least 6 pipe diameters (but no more than 3 feet) from boiler connection tees.
25	Systems using high-head pumps may require a bypass pressure regulator to prevent damage to control valves.
26	External drain/blowdown valve, when used.
33	Strainer, recommended.

Install water piping *(continued)*

WATER CHILLER systems — ZONE VALVES primary/secondary

See Figure 20.

1. The chiller must be piped in parallel with the boiler.
2. Use appropriate valves to prevent chilled medium from entering boiler.
3. Circulator zoning option — The space heating system can be zoned with circulators if a separate circulator is supplied for the chilled water loop. Install a separate circulator for each zone.
4. The flow/check valve shown on the boiler outlet piping prevents gravity circulation in the boiler loop during DHW heating.

CAUTION Use **at least** the **MINIMUM** pipe size shown in Figure 11, page 16 on all boiler loop piping (connecting boiler to and from the primary/secondary connection, item 21). **Primary/secondary piping shown** ensures the boiler loop will have sufficient flow. For other piping methods, see guidelines starting on page 15.

NOTICE If antifreeze is used in the system, consider the effects of antifreeze on circulator sizing and DHW performance. Some local codes may require double-wall DHW heat exchanger design. Use only the antifreeze listed by Weil-McLain for use with this boiler. See page 111 for details.

WARNING Chilled medium, if used, is piped in parallel with heating boiler as shown in Figure 20. Use appropriate valves to prevent chilled medium from entering boiler. If boiler is connected to heating coils located in air handling units where they can be exposed to refrigerated air, use flow control valves or other automatic means to prevent gravity circulation during cooling cycle.

Expansion Tank required

1. Provide a system expansion tank following the guidelines on page 16.
2. **DO NOT** use a closed-type tank if connecting to a water heater that is equipped with an automatic vent.

Domestic Hot Water (DHW) tank, if used

1. DHW direct connection—Pipe from the near-boiler piping to the DHW tank's boiler connections as shown.
2. DHW as zone— Not recommended for this application.
3. System Priority choices:
   a. DHW Priority – DHW is priority over space heating. Use Priority 1 for DHW; Priorities 2 and/or 3 for space heating. The control will not run multiple priorities simultaneously.
   b. Space Heating Priority – Space heating is priority over DHW. Use Priorities 1 and/or 2 for space heating; Priority 3 for DHW. The control will not run multiple priorities simultaneously.
   c. No Priorities – Space heating and DHW can occur simultaneously at same Supply Max. temperature. Use only if DHW is a zone in system. Assign DHW and Space heating to same Priority. Do not use outdoor reset for this application.

Controlling the circulators

1. The control can control up to four circulators (boiler circulator and three others). Refer to Field wiring, beginning on page 59, for instructions on wiring to circulators.

Figure 20 Chilled water system plus optional DHW piping — primary/secondary piping

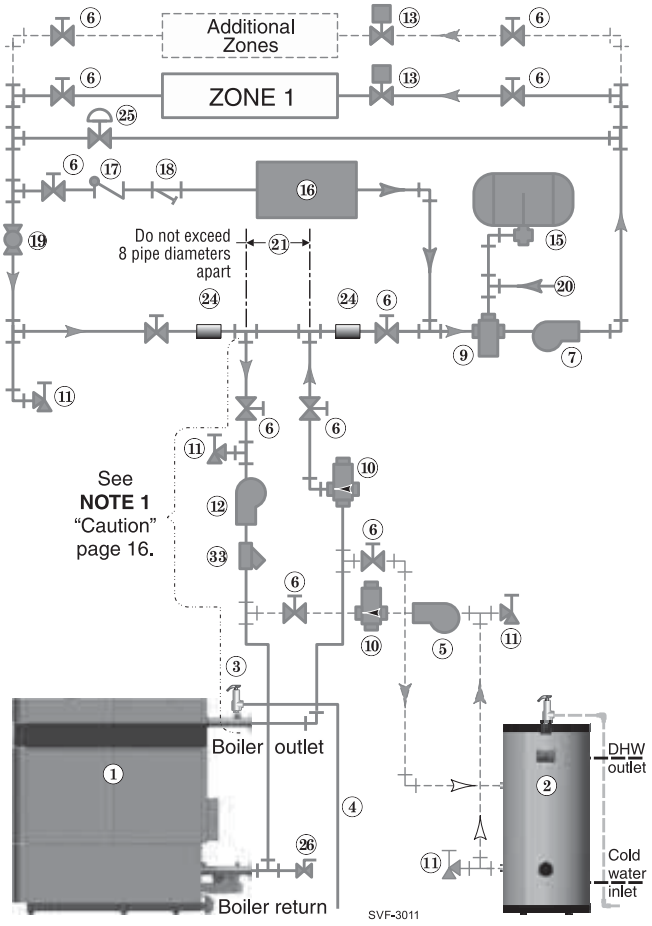

2. The factory default settings are: all three inputs are setup for Space Heating (Priority 2). Each input correlates to its respective circulator output. For DHW applications, assign DHW Input(s) to determined Priority (1, 2, or 3). Priority 1 is defaulted to DHW for DHW Priority applications.
3. For more than 3-zones, use Weil-McLain WMZV zone valve controller.

NOTICE Connect zone valve end switches to a Space Heating Priority input, (default Priority 2) to use default settings Connect system circulator to corresponding output.

CAUTION Use isolation relays if connecting 3-wire zone valve end switches to the inputs.

Legend — Figure 20

1	*SVF*™ boiler	16	Water chiller
2	Indirect water heater (DHW), if used	17	Check valve
3	Boiler relief valve (see page 14 for piping details)	18	Strainer
4	Relief valve discharge piping (see page 14 for details)	19	Balancing valve
5	DHW circulator	20	Make-up water supply
6	Isolation valves	21	Primary/secondary connection (tees no more than 8 pipe diameters apart)
7	System circulator (see information above for wiring)	24	System supply and return immersion sensors, at least 6 pipe diameters (but no more than 3 feet) from boiler connection tees.
9	Air separator [with automatic air vent only on systems using diaphragm (or bladder) type expansion tank]	25	Systems using high-head pumps may require a bypass pressure regulator to prevent damage to control valves.
10	Flow/check valves	26	External drain/blowdown valve, when used.
11	Purge/drain valves	31	Install a union on the boiler supply and return connections as close as possible to the boiler to allow disconnection for service when required.
12	Boiler circulator		
13	Zone valves, typical		
15	Closed-type expansion tank		

Venting/air piping — Massachusetts installations

Venting instructions for the installations in the Commonwealth of Massachusetts

(a) For all sidewall horizontally-vented gas-fueled equipment installed in every dwelling, building or structure used in whole or in part for residential purposes, including those owned or operated by the Commonwealth and where the side wall exhaust vent termination is less than seven (7) feet above finished grade in the area of the venting, including but not limited to decks and porches, the following requirements shall be satisfied:

1. **INSTALLATION OF CARBON MONOXIDE DETECTORS.** At the time of installation of the side wall horizontal vented gas fueled equipment, the installing plumber or gas fitter shall observe that a hard wired carbon monoxide detector with an alarm and battery back-up is installed on the floor level where the gas equipment is to be installed. In addition, the installing plumber or gas fitter shall observe that a battery operated or hard wired carbon monoxide detector with an alarm is installed on each additional level of the dwelling, building or structure served by the side wall horizontal vented gas fueled equipment. It shall be the responsibility of the property owner to secure the services of qualified licensed professionals for the installation of hard wired carbon monoxide detectors
   a. In the event that the side wall horizontally vented gas fueled equipment is installed in a crawl space or an attic, the hard wired carbon monoxide detector with alarm and battery back-up may be installed on the next adjacent floor level.
   b. In the event that the requirements of this subdivision can not be met at the time of completion of installation, the owner shall have a period of thirty (30) days to comply with the above requirements; provided, however, that during said thirty (30) day period, a battery operated carbon monoxide detector with an alarm shall be installed.
2. **APPROVED CARBON MONOXIDE DETECTORS.** Each carbon monoxide detector as required in accordance with the above provisions shall comply with NFPA 720 and be ANSI/UL 2034 listed and IAS certified.
3. **SIGNAGE.** A metal or plastic identification plate shall be permanently mounted to the exterior of the building at a minimum height of eight (8) feet above grade directly in line with the exhaust vent terminal for the horizontally vented gas fueled heating appliance or equipment. The sign shall read, in print size no less than one-half (1/2) inch in size, "GAS VENT DIRECTLY BELOW. KEEP CLEAR OF ALL OBSTRUCTIONS."
4. **INSPECTION.** The state or local gas inspector of the side wall horizontally vented gas fueled equipment shall not approve the installation unless, upon inspection, the inspector observes carbon monoxide detectors and signage installed in accordance with the provisions of 248 CMR 5.08(2)(a) 1 through 4.

(b) **EXEMPTIONS**: The following equipment is exempt from 248 CMR 5.08(2)(a)1 through 4:

1. The equipment listed in Chapter 10 entitled "Equipment Not Required To Be Vented" in the most current edition of NFPA 54 as adopted by the Board; and
2. Product Approved side wall horizontally vented gas fueled equipment installed in a room or structure separate from the dwelling, building or structure used in whole or in part for residential purposes.

(c) **MANUFACTURER REQUIREMENTS — GAS EQUIPMENT VENTING SYSTEM PROVIDED.** When the manufacturer of Product Approved side wall horizontally vented gas equipment provides a venting system design or venting system components with the equipment, the instructions provided by the manufacturer for installation of the equipment and the venting system shall include:

1. Detailed instructions for the installation of the venting system design or the venting system components; and
2. A complete parts list for the venting system design or venting system.

(d) **MANUFACTURER REQUIREMENTS — GAS EQUIPMENT VENTING SYSTEM NOT PROVIDED.** When the manufacturer of a Product Approved side wall horizontally vented gas fueled equipment does not provide the parts for venting the flue gases, but identifies "special venting systems", the following requirements shall be satisfied by the manufacturer:

1. The referenced "special venting system" instructions shall be included with the appliance or equipment installation instructions; and
2. The "special venting systems" shall be Product Approved by the Board, and the instructions for that system shall include a parts list and detailed installation instructions.

(e) A copy of all installation instructions for all Product Approved side wall horizontally vented gas fueled equipment, all venting instructions, all parts lists for venting instructions, and/or all venting design instructions shall remain with the appliance or equipment at the completion of the installation.

Venting/combustion air — general

NOTICE There are two venting methods available. Follow the instructions on the following pages for the method used.

Method 1: Direct exhaust

- Combustion air taken from inside (no air piping connected to air intake).
- Sidewall or vertical termination.

Method 2: Direct vent

- Combustion air piped to boiler from outside.
- Sidewall or vertical termination.

DANGER ***SVF***™ **boilers must be vented and supplied with combustion and ventilation air using piping and methods described in this manual.**

DO NOT COMMON VENT Category IV boilers.
Every boiler must have its own vent. DO NOT common vent with any other appliance. See page 28 for checking appliances remaining on a common vent.

INSPECT VENT/AIR COMPONENTS
Inspect finished vent and air piping thoroughly to ensure all are airtight and comply with the instructions provided and with all requirements of applicable codes. Verify all air openings are correctly sized, unobstructed, and free of airborne contaminants.

Failure to provide a properly-installed vent and air system will cause severe personal injury or death.

WARNING **DO NOT INSULATE NONMETALLIC VENT PIPE**
Do not cover nonmetallic vent pipe with thermal insulation.

Code compliance

WARNING Venting/combustion air piping - Installations must provide provisions for combustion and ventilation air in accordance with the section "Air for Combustion and Ventilation," of the National Fuel Gas Code - ANSI Z223.1/NFPA 54 – latest edition, or Sections 8.2, 8.3, or 8.4 of Natural Gas and Propane Installation Code - CAN/CSA B149.1, or applicable provisions of the local building codes.

Vent and air piping materials

WARNING Use only the materials listed in this manual (Figure 22, page 27) for vent and air pipe and fittings.

A masonry chimney can ONLY be used as a chase for vent and air piping

WARNING **If used, a masonry chimney can ONLY be used as a PIPE CHASE for vent and air pipes** — The vent and air piping must be installed as instructed in this manual and all joints must be sealed. The chimney must be used only as a chase for the ***SVF***™ boiler vent/air piping. NO OTHER appliance or fireplace can be connected to the chimney.

The chimney must be straight, with no offsets, and the vent and air piping materials must comply with this instruction manual.

The chimney must be fitted with a sealed access opening, through which the interior of the chimney can be inspected.

The chimney and liner must be inspected at least once annually to verify condition.

Failure to comply could result in severe personal injury, death or substantial property damage.

Air openings for direct exhaust

1. Combustion air must be supplied through openings into the boiler room, following the instructions in this manual, and compliant with all applicable codes. Combustion air must not be exposed to any of the contaminants listed in Figure 21, page 26, and ensure the air and boiler room will not contain contaminated air.
2. Where the ***SVF***™ boiler shares a space with other appliances, the combustion air openings must be sized to handle the combined requirements of all appliances in the space.

Combustion air piping for direct vent

1. Combustion air must be piped from outside to the boiler, following the instructions in this manual, and compliant with all applicable codes. Read the warning in Figure 21, page 26, and ensure the air intake will not be likely to draw in contaminated air.
2. Combustion air can be piped individually for each boiler, or it can be manifolded as shown in Figure 32, page 38. Combustion/ventilation openings may also be required in boiler room walls, per instructions in this manual and applicable codes.

Venting/combustion air — general *(continued)*

Combustion air contamination

1. **Direct exhaust** (combustion air from boiler room):
   a. Provide combustion air openings to boiler room as described in this manual.
   b. Ensure the boiler room and combustion air source areas are free of contaminants.
2. **Direct vent** (combustion air piped from outside):
   a. Install air inlet piping for the ***SVF***™ boiler as described in this manual.
   b. Do not terminate air piping in locations that can allow contamination of combustion air.
3. See Figure 21 for products and areas which may cause contaminated combustion air.

Figure 21 Corrosive contaminants and sources

Products to avoid
Spray cans containing chloro/fluorocarbons
Permanent wave solutions
Chlorinated waxes/cleaners
Chlorine-based swimming pool chemicals
Calcium chloride used for thawing
Sodium chloride used for water softening
Refrigerant leaks
Paint or varnish removers
Hydrochloric acid/muriatic acid
Cements and glues
Antistatic fabric softeners used in clothes dryers
Chlorine-type bleaches, detergents, and cleaning solvents found in household laundry rooms
Adhesives used to fasten building products and other similar products
Excessive dust and dirt

Areas likely to have contaminants
Dry cleaning/laundry areas and establishments
Swimming pools
Metal fabrication plants
Beauty shops
Refrigeration repair shops
Photo processing plants
Auto body shops
Plastic manufacturing plants
Furniture refinishing areas and establishments
New building construction
Remodeling areas
Garages with workshops

⚠WARNING **BIRD SCREENS —** Provide a vent manufacturer's **BIRD SCREEN at each termination**. Bird screens must be purchased from the vent/air piping supplier.

NOTICE **USE SWEEP ELBOWS FOR ALL VENT AND AIR PIPING WHEN POSSIBLE** — Short-radius elbows cause higher pressure loss, resulting in less allowable vent/air piping length. See Figure 25, page 31 for maximum lengths and reductions required for fittings.

Table 1 Vent / Air Adapters part numbers

Boiler Model *SVF*™	M&G Simpson-Duravent PolyPro		
	Description	**Mechanical Locking Collar**	**Vent Adapter Part Number**
1500/2000	8" polypropylene pipe	810004306	810007031
	Centrotherm Eco Systems – InnoFlue™ Single-wall		
1500/2000	8" polypropylene pipe	IADHC0808	ISSA0808
2500/3000	10" polypropylene pipe	IADHC1010	ISSA1010
	M&G Simpson-Duravent – Fas-N-Seal		
1500/2000	8" AL29-4C SS	——	No adapter req'd.
2500/3000	10" AL29-4C SS	——	No adapter req'd.
	Heat Fab, Inc. — Saf-T-Vent™		
1500/2000	8" AL29-4C SS	——	9801MAD
2500/3000	10" AL29-4C SS	——	91001MAD
	Metal-Fab, Inc. — CORR/GUARD		
1500/2000	8" AL29-4C SS	——	8FCSLCA
2500/3000	10" AL29-4C SS	——	10FCSLCA
	Z-Flex, Inc. — Z-Vent II		
1500/2000	8" AL29-4C SS	——	2SVSASNS08
2500/3000	10" AL29-4C SS	——	2SVSASNS10
	PVC Sch 40 / PVC-DWV Sch 40 CPVC Sch 40 or 80	**Weil-McLain Part Number**	**Duravent Part Number**
1500/2000	8" SS to PVC	560-907-830	810-005-333
2500/3000	10" SS to PVC	560-907-831	810-005-518

Venting/combustion air — options

Boiler vent and air connections:

The SVF boiler vent/air connection is sized for the following vent sizes / materials:

1. SVF 1500/2000 8" Duravent-FasNSeal
2. SVF 2500/3000 10" Duravent-FasNSeal

Installer must provide the correct adapters/reducers needed to connect to other approved vent manufacturer's products.

Venting/combustion air — options (Category II & IV)

Figure 22 Vent and air piping materials — Use only the materials listed below, ensuring that all materials meet local codes

Items	Material	Supplier / Manufacturer	United States	Canada
Vent or air pipe and fittings	Polypropylene	Duravent / M&G – PolyPro	Certified for Category II & IV and direct vent appliance venting	Plastic vent pipe must be certified to ULC S636 if required by local codes
		Centrotherm Eco Systems – InnoFlue™ Single-wall - Requires adapter by others	Certified for Category II & IV and direct vent appliance venting	Plastic vent pipe must be certified to ULC S636 if required by local codes
	AL29-4C stainless steel	Dura-Vent — FasNSeal™	Certified for Category II & IV and direct vent appliance venting	Certified for Category II & IV and direct vent appliance venting
		Heat Fab, Inc. — Saf-T-Vent™ - Requires adapter by others	Certified for Category II & IV and direct vent appliance venting	Certified for Category II & IV and direct vent appliance venting
		Metal-Fab, Inc. — CORR/GUARD - Requires adapter by others	Certified for Category II & IV and direct vent appliance venting	Certified for Category II & IV and direct vent appliance venting
		Z-Flex, Inc. — Z-Vent II - Requires adapter by others	Certified for Category II & IV and direct vent appliance venting	Certified for Category II & IV and direct vent appliance venting
	PVC Schedule 40 See Note 1 for additional requirements for using PVC on the exhaust.		ANSI/ASTM D1785	Plastic vent pipe must be certified to ULC S636 if required by local jurisdiction. Air pipe can be any of those listed at left if acceptable by local codes.
	PVC-DWV Schedule 40 See Note 1 for additional requirements for using PVC on the exhaust.		ANSI/ASTM D2665	Plastic vent pipe must be certified to ULC S636 if required by local jurisdiction. Air pipe can be any of those listed at left if acceptable by local codes.
	CPVC Schedule 40		ANSI/ASTM F441	Plastic vent pipe must be certified to ULC S636 if required by local jurisdiction. Air pipe can be any of those listed at left if acceptable by local codes.
Primer and Cement	PVC		ANSI/ASTM D2564 (cement) ANSI/ASTM F656 (primer)	ULC S636 rated Primers and Cements
	CPVC		ANSI/ASTM F493 (cement) Primer that is approved for CPVC.	ULC S636 rated Primers and Cements
	CPVC to PVC transition		Use only a Primer and Cement that is suitable for joining CPVC and PVC pipe.	ULC S636 rated Primers and Cements

Notes:

DANGER 1. PVC can only be used on the exhaust of a boiler after 10 linear feet of CPVC pipe. All fittings within the first 10 feet must be CPVC. See Figure 23, page 28.

WARNING Every joint on vent and air piping must include a locking collar. Failure to supply locking collars could result in vent/air piping leakage. All PVC and CPVC joints should be permanently joined using the suitable primer and cement for the vent material.

WARNING **DO NOT USE**: Cellular core PVC (ASTM F891), cellular core CPVC, or Radel™ (polyphenolsulfone) pipe or any other material not listed in the table above.

WARNING DO NOT mix piping from different pipe manufacturers unless using adapters specifically designed for the purpose by the manufacturer.

Appliances remaining on an existing vent system

Figure 23 PVC Venting allowed per requirements specified below.

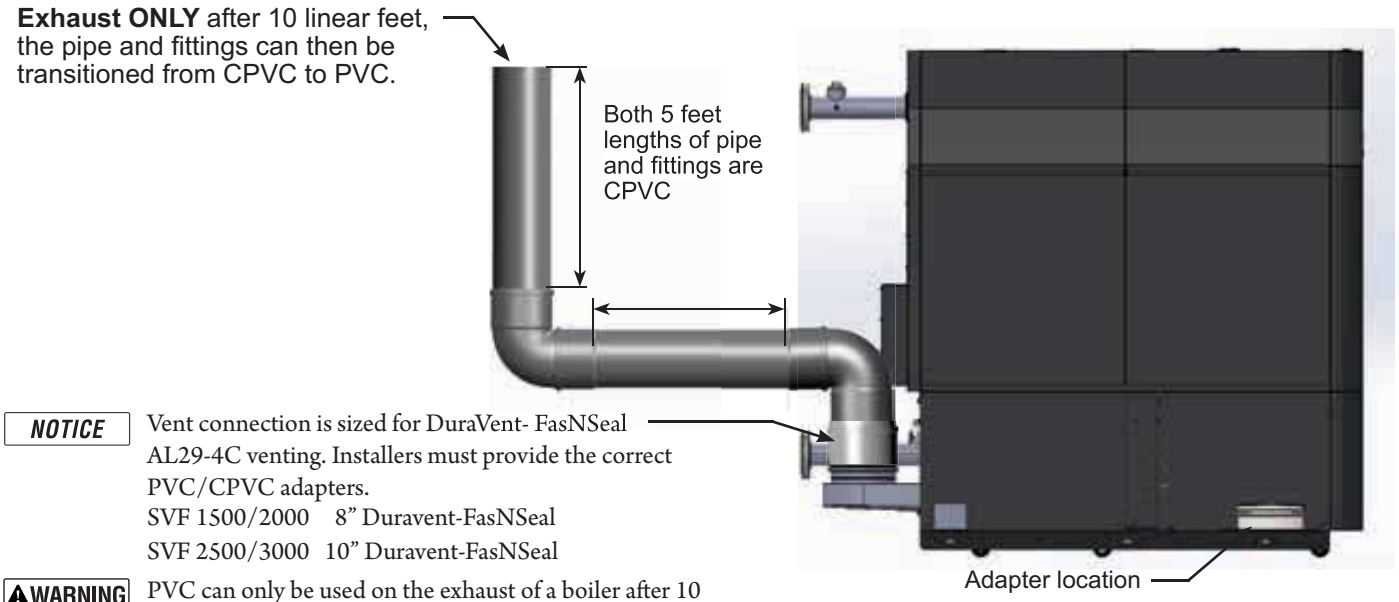

NOTICE Vent connection is sized for DuraVent- FasNSeal AL29-4C venting. Installers must provide the correct PVC/CPVC adapters.
SVF 1500/2000 8" Duravent-FasNSeal
SVF 2500/3000 10" Duravent-FasNSeal

WARNING PVC can only be used on the exhaust of a boiler after 10 linear feet of CPVC pipe.
All fittings within the first 10 feet must be CPVC.

DANGER Do not install the ***SVF***™ boiler into a common vent with any other appliance. This will cause flue gas spillage or appliance malfunction, resulting in possible severe personal injury, death or substantial property damage.

WARNING Existing common vent systems may be too large for the appliances remaining connected after the existing boiler is removed.

WARNING Failure to follow all instructions can result in flue gas spillage and carbon monoxide emissions, causing severe personal injury or death.

When removing a boiler from an existing common vent system

The *SVF*™ boiler cannot be common vented with any other appliances. See Category II venting requirements for additional venting options. When an existing boiler is replaced with a ***SVF***™ boiler, the ***SVF***™ boiler CANNOT use the existing common vent. The ***SVF***™ boiler requires its own vent and air piping, as specified in this manual. This may cause a problem for the appliances that remain on the old common vent, because the vent may be too large. The following test is intended to check for proper operation of the appliances remaining on the old common vent system.

Vent system verification

At the time of removal of an existing boiler, the following steps shall be followed with each appliance remaining connected to the common venting system placed in operation, while the other appliances remaining connected to the common venting system are not in operation. Seal any unused openings in the common venting system.

Existing vent test procedure

(The following is intended to test whether the appliances remaining on an existing vent system will operate satisfactorily.)

1. Visually inspect the venting system for proper size and horizontal pitch and determine there is no blockage or restriction, leakage, corrosion or other deficiencies which could cause an unsafe condition.
2. Test vent system — Insofar as is practical, close all building doors and windows and all doors between the space in which the appliances remaining connected to the common venting system are located and other spaces of the building. Turn on clothes dryers and any appliance not connected to the common venting system. Turn on any exhaust fans, such as range hoods and bathroom exhausts, so they will operate at maximum speed. Do not operate a summer exhaust fan. Close fireplace dampers.
3. Place in operation the appliance being inspected. Follow the lighting instructions. Adjust thermostat so appliance will operate continuously.
4. Test for spillage at draft hood relief opening after 5 minutes of main burner operation. Use the flame of a match or candle, or smoke from a cigarette, cigar, or pipe.
5. After it has been determined that each appliance remaining connected to the common venting system properly vents when tested as outlined herein, return doors, windows, exhaust fans, fireplace dampers, and any other gas-burning appliance to their previous conditions of use.

Any improper operation of the common venting system should be corrected so the installation conforms with the National Fuel Gas Code - ANSI Z223.1/NFPA 54 – latest edition, and/or the Natural Gas and Propane Installation Code, Natural Gas and Propane Installation Code - CAN/CSA B149.1. When resizing any portion of the common venting system, the common venting should be resized to approach the minimum size as determined using the appropriate tables in Chapter 13 of the National Fuel Gas Code - ANSI Z223.1/NFPA 54 – latest edition, and/or the Natural Gas and Propane Installation Code, CAN/CSA B149.1.

Venting/combustion air — options (Category II)

Category II Requirements

In addition to the ***SVF***™ boilers Category IV rating (positive pressure, likely to condense), ***SVF***™ boilers are approved for Category II (negative pressure, likely to condense) as well.

This venting option includes / requires:

- The Vent system for a Category II ***SVF***™ boiler is considered a Designed / Engineered vent system and should be designed by a professional using accepted engineering practices in accordance to local authority having jurisdiction.
- Vertical Vent termination only.
- Must not be installed into an existing common vent system with other appliances.
- Combustion air from the boiler room. See Direct Exhaust Combustion Air opening requirements on page 33.
- The vent shall consist of a 3 foot piece of 8" or 10" diameter straight pipe directly after the vent/air adapter before any diameter or direction changes in the vent. See chart below for Boiler Model specific vent size.
- The Vent System should be designed so that the pressure in the vertical vent pipe immediately following the boiler is between the ranges provided in the Table 2 below, during all operating conditions i.e., High Fire, Low Fire, etc.
- Flue gas temperature should not exceed 210°F, the boiler will shut down and recycle if it does, at a flue temperature of 200°F, the boiler will start to reduce the firing rate. The flue gas temperature should typically be within 20°F - 30°F of the return water temperature of the boiler. If there is the potential for a wide variation in return water temperatures, the lowest possible temperature should be used for any calculations.
- Stack / Vent Flow Rate for each individual boiler model is listed in the table below. This flow rate is based on the unit running at 9.0% CO_2 and the maximum flue gas temperature of 200°F. The values can vary depending on the location of the installation and operating conditions.
- A carbon monoxide detector(s) is required in the boiler room for ***SVF***™ boilers installed in a Category II configuration. The carbon monoxide detector must be wired on the same electrical circuit as the boiler. Check your local codes for any additional requirements of carbon monoxide detectors.

Figure 24 Venting

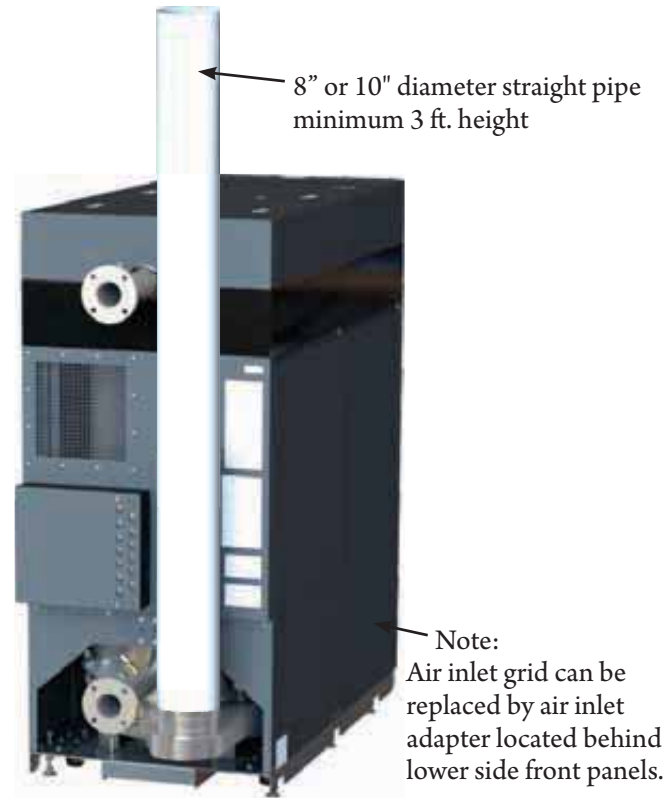

Table 2 Rating and Vent Data

Boiler Model	Input	Stack / Vent flow rate	Negative Pressure to be maintained at Vent Connection of the boiler	Connection/Minimum Vent Diameter required for Category II
	Btuh	scfm	Inches w.c.	(See Note 1)
SVF 1500	1,500,000	415	-0.001 to -0.100	8"
SVF 2000	1,999,000	553	-0.001 to -0.100	8"
SVF 2500	2,499,000	692	-0.001 to -0.100	10"
SVF 3000	3,000,000	830	-0.001 to -0.100	10"

Boiler vent and air connections:

The SVF boiler vent/air connection is sized for the following vent sizes/ materials:

1. SVF 1500/2000 8" Duravent-FasNSeal
2. SVF 2500/3000 10" Duravent-FasNSeal

Installer must provide the correct adapters/reducers needed to connect to other approved vent manufacturer's products.

Venting/combustion air — options (Category II)

WARNING Improper Installation of a Category II vent system resulting in positive pressure in the vent system can result in flue gas spillage and carbon monoxide emissions, causing severe personal injury or death.

NOTICE In applications where the venting system cannot maintain the required negative pressure on the boiler outlet via natural draft, Weil-McLain recommends the use of a Variable Speed Chimney Fan / Power venter to ensure that the appropriate negative pressure range is kept for Category II venting. The reason this may be needed is due to the higher efficiency of the ***SVF***™ boiler. The exhaust gas temperatures are lower which result in less draft when using a chimney fan/power venter. A flow proving switch should be wired into the Closure Switch on terminal block P11 of the boiler. The use of this device should be considered in any engineered vent system in accordance to local authority having jurisdiction.

NOTICE Weil-McLain recommends the use of a Double Acting Barometric Damper or Modulating Damper to ensure the appropriate negative pressure range is kept for Category II venting. The use of this device should be considered in any engineered vent system in accordance to local authority having jurisdiction.

NOTICE When using a damper of any kind, it is recommended to use a thermal spill switch to detect any exhaust flow into the boiler room. Verify the temperature range on the thermal spill switch is adequate for the Flue gas temperature from the ***SVF***™ boiler. The use and set-point of this shall be determined by the system designer in accordance to local authority having jurisdiction.

Code Compliance

WARNING Venting / Combustion air piping – Installations must provide provisions for combustion and ventilation air in accordance with the section "Venting of Equipment", of the National Fuel Gas Code, ANSI Z223.1/NFPA 54, or "Venting Systems and Air Supply for appliances" of the Natural Gas and Propane Installation Code, CAN/CSA B149.1, or applicable provisions of the local building codes.

Venting/combustion air — options (Category IV)

Figure 25 *SVF™* boiler venting and air piping — OPTIONS and PIPING LIMITS — The table below lists the acceptable vent/air pipe terminations described in this manual.

USE ONLY the pipe materials listed in Figure 22, page 27

Boiler vent and air connections:

The SVF boiler vent/air connection is sized for the following vent sizes/ materials:

1. SVF 1500/2000 8″ Duravent-FasNSeal
2. SVF 2500/3000 10″ Duravent-FasNSeal

Installer must provide the correct adapters/reducers needed to connect to other approved vent manufacturer's products. The air inlet adapter is located behind the lower side front panels. See "Components - Front View" at the beginning of this manual.

SVF™ Model	Pipe Size	**SIDEWALL** Direct Exhaust	**VERTICAL** Direct Exhaust	**SIDEWALL** Direct Vent (vent and air out sidewall)	**VERTICAL** Direct Vent (vertical or sidewall air)
		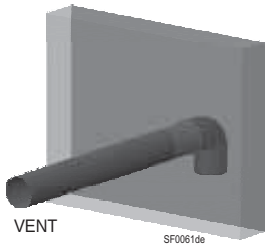	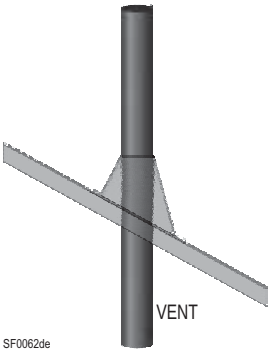	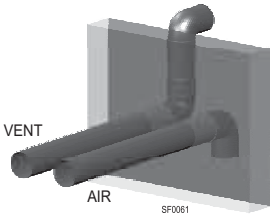	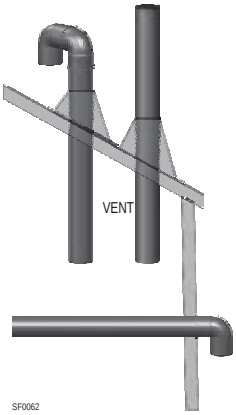
		See page 36	See page 34	See page 41	See page 43
		Thickness of wall/roof vent penetration; Max.: 18″ Min.: 0″	Thickness of wall/roof vent penetration; Max.: 18″ Min.: 0″	Thickness of wall/roof vent penetration; Max.: 18″ Min.: 0″	Thickness of wall/roof vent penetration; inches Max.: 18″ Min.: 0″
		length, equiv. feet *(Note 1)*	length, equiv. feet *(Note 1)*	length, equiv. feet *(Note 1)*	length, equiv. feet *(Note 1)*
1500	**8″**	**100 max. / 10 min.**	**100 max. / 10 min.**	**100 max. / 10 min.**	**100 max. / 10 min.**
2000	**8″**	**100 max. / 10 min.**	**100 max. / 10 min.**	**100 max. / 10 min.**	**100 max. / 10 min.**
2500	**10″**	**100 max. / 10 min.**	**100 max. / 10 min.**	**100 max. / 10 min.**	**100 max. / 10 min.**
3000	**10"**	**100 max. / 10 min.**	**100 max. / 10 min.**	**100 max. / 10 min.**	**100 max. / 10 min.**

Note 1

REDUCE MAXIMUM VENT/AIR PIPE LENGTHS FOR ELBOWS

If the TOTAL number of elbows used in the vent and air piping and terminations is **more than two elbows in the vent piping and one elbow** in the air piping, **REDUCE** the maximum lengths above by the following lengths for each additional elbow (whether 45° or 90°).

PP – 8" or 10" - inch vent/air piping — Reduce maximum allowable length by 15 feet for each additional elbow used.
PVC – 8" - inch vent/air piping — Reduce maximum allowable length by 7 feet for each additional elbow used.
PVC – 10" - inch vent/air piping — Reduce maximum allowable length by 15 feet for each additional elbow used.

NOTE: **If the pipe manufacturer's equivalent lengths for elbows is LONGER than the values listed above, use the pipe manufacturer's value for length reduction per elbow instead.**

Boilers will **derate** as vent/air pipe length increases — see Figure 115, page 120 for derate amount vs piping length.

DIRECT EXHAUST — Boiler room air openings (Category II and IV)

Combustion air provision

The ***SVF***™ Commercial boiler can use inside air if no contaminants are present in the boiler space. (If contaminants are likely to be present, install the boiler as a direct vent appliance, using the appropriate vent instructions in this manual.)

The boiler room must be fitted with combustion air openings large enough to provide air for all appliances in the room. Use the following information to size the openings. Ensure the installation complies with all applicable codes and standards.

Sizing combustion air openings

Air openings provide for ventilation (as well as combustion air) to prevent overheating of the boiler controls and boiler space. Air is also needed for other appliances located in the same space.

Use Figure 26, page 33, selecting the appropriate installation conditions.

⚠WARNING Air openings must be sized to handle all appliances and air movers (exhaust fans, etc.) using the air supply.

The sizing given in Figure 26, page 33 is based on the National Fuel Gas Code - ANSI Z223.1/NFPA 54 – latest edition, allowing adequate air openings for gravity-vented gas appliances (Category I) in addition to that needed for the ***SVF***™ boiler.

The ***SVF***™ Commercial boiler is rated Category IV (pressurized vent), and has varying requirements for combustion and ventilation air, reflected by the special sizing instructions given in this manual.

The air openings recommended in Figure 26, page 33 will allow adequate ventilation and combustion air provided the boiler room is not subjected to negative pressure due to exhaust fans or other mechanical ventilation devices.

Refer to the National Fuel Gas Code - ANSI Z223.1/NFPA 54 – latest edition for dealing with other conditions.

Free area — louver allowance

The free area of openings means the area **after reduction for any installed louvers or grilles**. Be sure to consider this reduction when sizing the air opening.

Special considerations

Tight construction

National Fuel Gas Code - ANSI Z223.1/NFPA 54 – latest edition defines unusually tight construction where:

1. Walls and ceilings exposed to the outside atmosphere have a continuous water vapor retarder with a rating of 1 perm or less with openings gasketed, and . . .
2. Weather-stripping has been added on openable windows and doors, and . . .
3. Caulking or sealants are applied to areas such as joints around windows and door frames, between sole plates and floors, between wall-ceiling joints, between wall panels, at penetrations for plumbing, electrical, and gas lines, and in other openings.

For buildings with such construction, provide air openings into the building from outside, sized per the appropriate case in Figure 26, page 33 if appliances are to use inside air for combustion and ventilation.

Exhaust fans and air movers

The appliance space must never be under a negative pressure unless all appliances are installed as direct vent. Always provide air openings sized not only to the dimensions required for the firing rate of all appliances, but also to handle the air movement rate of the exhaust fans or air movers using air from the building or space.

The Damper/Louver control can also provide 120V to operate a damper, (see Aux. pump system) as well as provide input for a closure switch to allow the damper to prove the damper is in open position.

DIRECT EXHAUST — Boiler room air openings *(continued)* (Category II and IV)

Figure 26 MINIMUM combustion air openings for direct exhaust applications — **ALL OPENING SIZES ARE FREE AREA**

Air openings The required air opening sizes below are FREE AREA, after reduction for louver obstruction. Note the exception below for large spaces.	***SVF*™ boiler *WITH* other appliances in room**	***SVF*™ boiler WITHOUT other appliances in room**
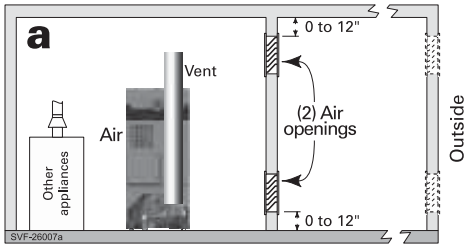	**TWO** openings, each at least: **1** square inch per **1,000** Btuh of all appliances in the room, but not less than 100 in².	**TWO** openings, each at least: **1** square inch per **1,000** Btuh of all appliances in the room, but not less than 100 in².
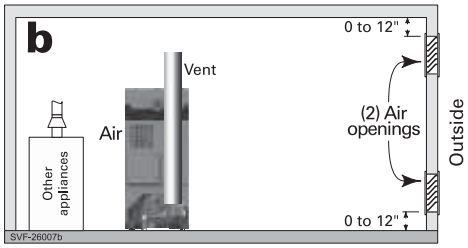	**TWO** openings, each at least: **1** square inch per **2,000** Btuh of all appliances in the room — OR — **ONE** opening **, each at least: **1** square inch per **3,000** Btuh of all appliances in the room.	**TWO** openings, each at least: **1** square inch per **2,000** Btuh of all appliances in the room — OR — **ONE** opening **, each at least: **1** square inch per **3,000** Btuh of all appliances in the room.
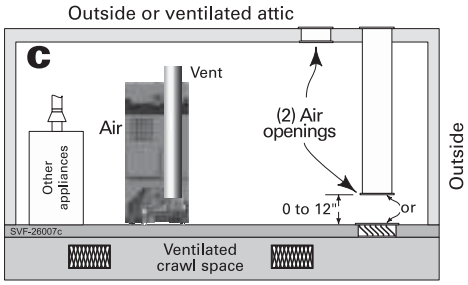	**TWO** openings, each at least: **1** square inch per **4,000** Btuh of all appliances in the room — OR — **ONE** opening **, each at least: **1** square inch per **3,000** Btuh of all appliances in the room.	**TWO** openings, each at least: **1** square inch per **4,000** Btuh of all appliances in the room — OR — **ONE** opening **, each at least: **1** square inch per **3,000** Btuh of all appliances in the room.
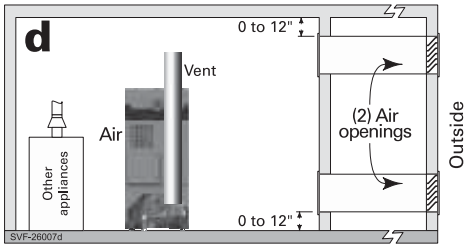	**TWO** openings, each at least: **1** square inch per **2,000** Btuh of all appliances in the room — OR — **ONE** opening **, each at least: **1** square inch per **3,000** Btuh of all appliances in the room.	**TWO** openings, each at least: **1** square inch per **2,000** Btuh of all appliances in the room — OR — **ONE** opening **, each at least: **1** square inch per **3,000** Btuh of all appliances in the room.
**** NOTICE:** **Requirements for using the SINGLE air opening option.**	A single combustion air opening can be used for cases **b**, **c** or **d** above, sized as listed, provided that: • The single opening must communicate directly to the outdoors or to a space that communicates directly with outdoors (NOT to an interior space). • The top of the opening must be within 12 inches of the ceiling. • The free area of the opening must be at least equal to the sum of the areas of all equipment vent connectors in the space.	
SPECIAL EXCEPTION FOR LARGE SPACES:	NO combustion air openings are needed when the boiler (and other appliances) are installed in a space with a volume NO LESS than 50 cubic feet per 1,000 Btuh of all appliances in the space. That is, total the input of all appliances in MBH (1,000's of Btuh), then multiply this total times 50. The building MUST NOT be of tight construction. Example: For a total input of 1500 MBH (1,500,000 Btuh) and an 8-foot ceiling height, the minimum volume would be 50 x 1500 = 75,000 cubic feet.	

DIRECT EXHAUST — Vertical (Category II and IV)

Figure 27 Vertical direct exhaust termination

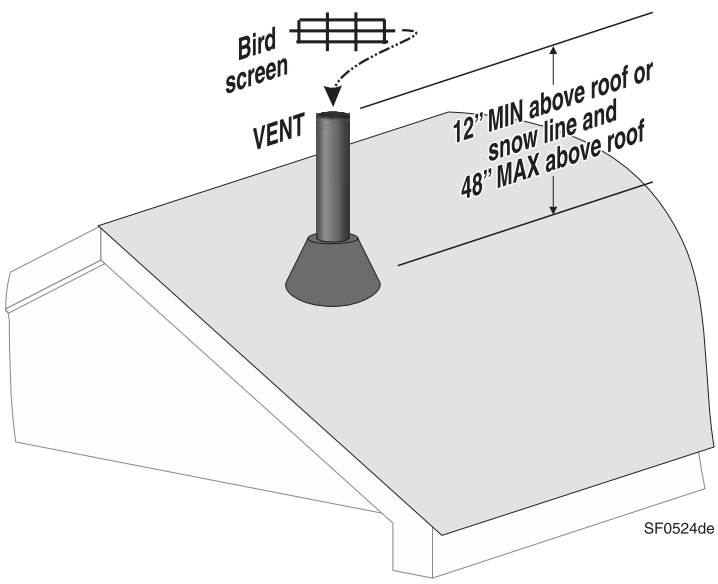

WARNING **Use only the vent materials and kits listed in Figure 22, page 27.**

Read and follow all instructions in this manual. **DO NOT proceed with vent installation until you have read page 25 through page 35.**

Locate the termination such that the total vent piping from the boiler to the termination **will not exceed the maximum length given in Figure 25, page 31** for Category IV venting.

Comply with all vent system manufacturer's instructions.

Provide a vent manufacturer's Vent Adapter and reducer (if needed) at the boiler vent connection.

Every joint on **polypropylene vent piping must** include a locking collar. Failure to supply locking collars could result in vent/air piping leakage.

Determine termination location

1. The vent termination must be installed as shown in Figure 27.
2. The termination placement must comply with clearances and limitations shown in Figure 28, page 35.
3. Locate the termination so is not likely to be damaged by foreign objects, such as stones or balls, or subject to buildup of leaves or sediment.
4. Ensure proper clearance above grade or snow line. Keep vents/air intake area clear of accumulating snow.
5. Install the boiler in a location that allows proper routing of all vent piping from the boiler vent connection to the selected sidewall location.

Multiple vent terminations

1. When terminating multiple ***SVF***™ boilers, terminate each vent connection as described in this manual.
2. Place wall penetrations to obtain minimum clearances shown in Figure 27 for U. S. installations.
3. For Canadian installations, provide clearances required by Natural Gas and Propane Installation Code - CAN/CSA B149.1 Installation Code and a ULC S636 compliant vent kit.

Install vent piping

NOTICE **USE SWEEP ELBOWS FOR ALL VENT PIPING WHEN POSSIBLE** — Short-radius elbows cause higher pressure loss, resulting in less allowable vent/air piping length. See Figure 25, page 31 for maximum lengths and reductions required for fittings.

1. Install the vent manufacturer's vent adapter, if needed to adapt to the vent size/material being used in the boiler vent outlet. Follow all vent manufacturer's instructions.
2. Install a vent manufacturer reducer if needed to adapt to the vent size being used.
3. Slope vent piping toward the boiler — slope vent piping a minimum of ¼ inch per foot in horizontal runs or larger per vent pipe manufacturer's instructions.
4. Support piping independently of the boiler — Install pipe supports every 5 feet on both the horizontal and vertical runs. Install a hanger support within 6 inches of any upturn in the piping. Or follow vent pipe manufacturer's instructions.

Install vent termination

1. Vent pipe penetration:
   a. Cut a hole for the vent pipe.
   b. For combustible construction, size the vent pipe hole at least ⅜" larger than the vent pipe diameter, or larger if specified by the vent manufacturer.
   c. For noncombustible construction, size the opening per vent manufacturer instructions.
   d. Insert a corrosion-resistant metal thimble in the vent pipe hole.
   e. Follow all local codes for isolation of vent pipe when passing through floors, ceilings, and roofs.
2. Provide flashing and sealing boots sized for the vent pipe.
3. Use a coupling or open-end pipe termination, following vent manufacturer's guidelines for vertical terminations.
4. Install a vent manufacturer's bird screen in the open end of the termination.
5. Maintain the required dimensions of the finished termination piping as shown in Figure 27.

WARNING Do not exceed the maximum length of the outside vent piping shown in Figure 27. Excessive length exposed to the outside could result in freezing of condensate in the vent pipe or vent/air piping failure. Follow vent/air pipe manufacturer's instructions for proper protection and support of the piping and for installations in very cold climates.

DIRECT EXHAUST — Sidewall Termination location (Category IV)

Figure 28 DIRECT EXHAUST INSTALLATIONS — Requirements for termination location — clearances and placement

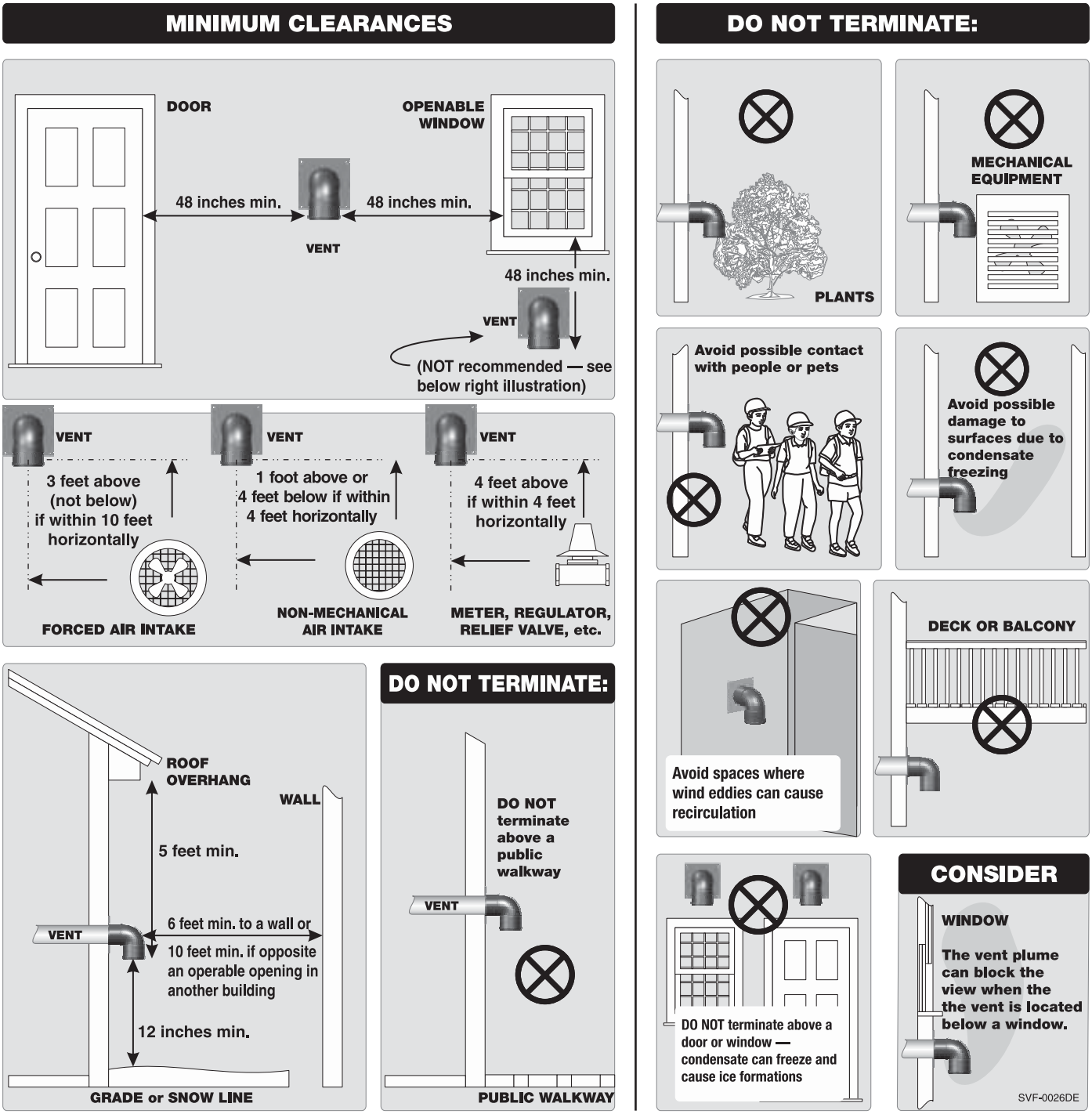

WARNING **Vent Termination Locations** – the minimum distance from adjacent public walkways, adjacent buildings, openable windows and building openings shall not be less than those values specified in the National Fuel Gas Code - ANSI Z223.1/NFPA 54 – latest edition, and/or the Natural Gas and Propane Installation Code, CAN/CSA B149.1. Vent and air terminations must be installed at least 12 inches (0.31m) above grade and snow line. Consideration should be given to avoid possible damage caused by vent plumes and condensate when choosing a venting configuration and location. Maintain a minimum clearance of 4 ft. (1.22m) horizontally from, and in no case above or below, unless a 4 ft. (1.22m) horizontal distance is maintained, from electrical meters, gas meters, regulators, and relief equipment.

DIRECT EXHAUST — Sidewall (Category IV)

Figure 29 Sidewall direct exhaust termination

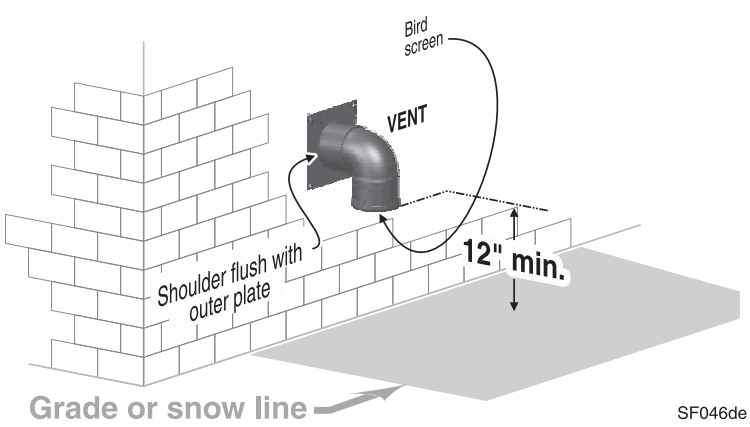

WARNING **Use only the vent materials and kits listed in Figure 22, page 27.**

Read and follow all instructions in this manual. **DO NOT proceed with vent installation until you have read page 25 through page 35.**

Locate the termination such that the total vent piping from the boiler to the termination **will not exceed the maximum length given in Figure 25, page 31**.

Comply with all vent system manufacturer's instructions.

Provide a vent manufacturer's Vent Adapter and reducer (if needed) at the boiler vent connection.

Every joint on **polypropylene vent piping must** include a locking collar. Failure to supply locking collars could result in vent/air piping leakage.

Determine termination location

1. The vent termination must be installed as shown in Figure 29 and in Figure 31, page 37.
2. The termination placement must comply with clearances and limitations shown in Figure 28, page 35.
3. Locate the termination so is not likely to be damaged by foreign objects, such as stones or balls, or subject to buildup of leaves or sediment.
4. Ensure proper clearance above grade or snow line. Keep vents/air intake area clear of accumulating snow.
5. Install the boiler in a location that allows proper routing of all vent piping from the boiler vent connection to the selected sidewall location.

Multiple vent terminations

1. When terminating multiple ***SVF***™ boilers, terminate each vent connection as described in this manual. See Figure 30, page 37 for typical layout.
2. Place wall penetrations to obtain minimum clearances shown in Figure 29 for U. S. installations.
3. For Canadian installations, provide clearances required by Natural Gas and Propane Installation Code - CAN/CSA B149.1 Installation Code and a ULC S636 compliant vent kit.

Install vent piping

NOTICE **USE SWEEP ELBOWS FOR ALL VENT PIPING WHEN POSSIBLE** — Short-radius elbows cause higher pressure loss, resulting in less allowable vent/air piping length. See Figure 25, page 31 for maximum lengths and reductions required for fittings.

1. Install a vent manufacturer adapter if needed to adapt to the vent size/material being used. Follow all vent manufacturer's instructions.
2. Slope vent piping toward the boiler — slope vent piping a minimum of ¼ inch per foot in horizontal runs or larger per vent pipe manufacturer's instructions.
3. Support piping independently of the boiler — Install pipe supports every 5 feet on both the horizontal and vertical runs. Install a hanger support within 6 inches of any upturn in the piping. Or follow vent pipe manufacturer's instructions.

Install vent termination elbow

1. Maintain the required dimensions of the finished termination piping as shown in Figure 29, page 36.

DIRECT EXHAUST — Sidewall *(continued)* (Category IV)

2. Vent pipe penetration:
   a. Cut a hole for the vent pipe.
   b. For combustible construction, size the vent pipe hole at least ⅜" larger than the vent pipe diameter, or larger if specified by the vent manufacturer.
   c. For noncombustible construction, size the opening per vent manufacturer instructions.
   d. Insert a corrosion-resistant metal thimble in the vent pipe hole as shown in Figure 31.
   e. Follow all local codes for isolation of vent pipe when passing through floors or walls.
3. Figure 31 — Provide and install corrosion-resistant metal stop plates (item 3) as shown.
   a. The hole size in the stop plates must be just larger than the vent pipe diameter.
   b. Obtain stop plates ONLY from the vent pipe manufacturer.
4. Insert the last length of vent pipe from the outside. The shoulder of the vent pipe female end must rest against the outer stop plate as shown. The plate must prevent the vent from being pushed inward.
5. Insert the termination elbow into the vent pipe end.
6. Install a vent manufacturer's bird screen in the open end of the vent termination elbow.
7. Seal exterior openings thoroughly with exterior caulk.
8. For multiple boiler terminations, see Figure 30.

Figure 30 Multiple boiler direct exhaust sidewall terminations (see Figure 29, page 36 for required clearances)

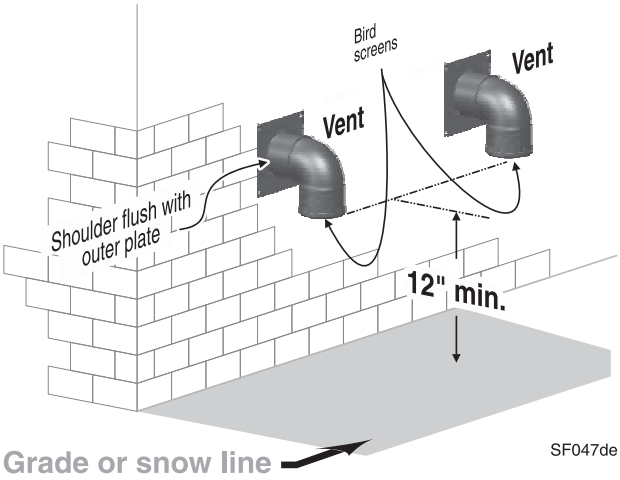

Figure 31 Sidewall termination assembly — direct exhaust installations

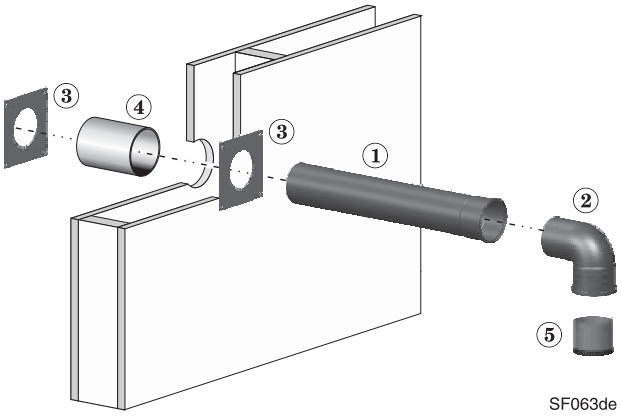

1. Vent piping — insert from the outside until the female end shoulder rests against the outside stop plate.
2. Vent termination elbow — use down-turned 90-degree elbow.
3. Vent manufacturer's sidewall stop plates (hole must be just larger than the vent diameter).
4. Corrosion-resistant thimble, by installer.
5. Vent manufacturer's bird screen, by installer.

DIRECT VENT — Boiler room air openings (Category IV)

Combustion/ventilation air provision

For direct vent installations, combustion air must be ducted directly from outside to the boiler air intake fitting. Two options are available: sidewall or vertical direct vent. Though combustion air is ducted to the ***SVF***™ boiler, the boiler room will still require air openings, either for ventilation or for combustion air for other appliances plus ventilation.

Sizing air openings

Air openings provide for ventilation (as well as combustion air) to prevent overheating of the boiler controls and boiler space. Air is also needed for other appliances located in the same space.

Use Figure 33, page 39, selecting the appropriate installation conditions.

⚠WARNING Air openings must be sized to handle all appliances and air movers (exhaust fans, etc.) using the air supply.

The sizing given in Figure 33, page 39 is based on the National Fuel Gas Code - ANSI Z223.1/NFPA 54 – latest edition, allowing adequate air opening for gravity-vented gas appliances (Category I) when located in the same space as the ***SVF***™ boiler.

When outside air is ducted as directed in this manual, the ***SVF***™ boiler is rated as direct vent (pressurized vent), and has varying requirements for combustion and ventilation air, reflected by the special sizing instructions given in Figure 33, page 39.

The air openings recommended in Figure 33, page 39 will allow adequate ventilation and combustion air provided the boiler room is not subjected to negative pressure due to exhaust fans or other mechanical ventilation devices. Refer to the National Fuel Gas Code for dealing with other conditions.

Louver allowance

The free area of openings means the area **after reduction for any installed louvers or grilles**. Be sure to consider this reduction when sizing the air openings.

Special considerations

Tight construction

ANSI Z223.1/NFPA 54 defines unusually tight construction where:

1. Walls and ceilings exposed to the outside atmosphere have a continuous water vapor retarder with a rating of 1 perm or less with openings gasketed, and . . .
2. Weather-stripping has been added on openable windows and doors, and . . .
3. Caulking or sealants are applied to areas such as joints around windows and door frames, between sole plates and floors, between wall-ceiling joints, between wall panels, at penetrations for plumbing, electrical, and gas lines, and in other openings.

For buildings with such construction, provide air openings into the building from outside, sized per the appropriate case in Figure 33, page 39 if appliances are to use inside air for combustion and ventilation.

Exhaust fans and air movers

The appliance space must never be under a negative pressure unless all appliances are installed as direct vent. Always provide air openings sized not only to the dimensions required for the firing rate of all appliances, but also to handle the air movement rate of the exhaust fans or air movers using air from the building or space.

Manifolded combustion air option

1. Multiple ***SVF***™ boilers can use a common combustion air manifold.
   a. Size the duct to provide at least 1 square inch per 2,000 Btuh total input of connected boilers.
   b. Provide minimum clearance to adjacent vents and grade/snow line as shown in Figure 32.
   c. Provide minimum free area in duct (adjusted for louver restriction) of **1 square inch per 2,000 Btuh** total boiler input, or divide the total MBH (1000's Btuh) by 2.
   d. Example: For an MBS system with total input of 3,000,000 Btuh, or 3,000 MBH: Divide 3,000 by 2 = 1500 square inches minimum for a combined air duct.

⚠WARNING **ONLY air piping can be combined. DO NOT use combined Category IV vent piping. Flue gas leakage and boiler component damage can occur. Failure to comply could result in severe personal injury, death or substantial property damage.**

Figure 32 Manifolded combustion air option

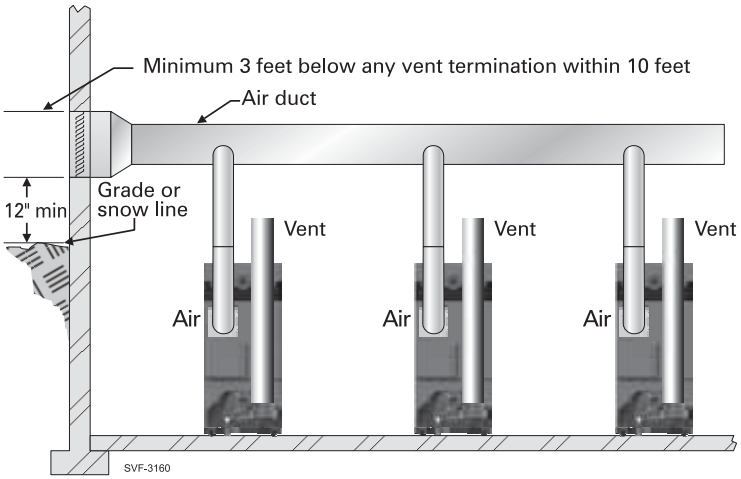

DIRECT VENT — Boiler room air openings *(continued)* (Category IV)

Figure 33 MINIMUM combustion air openings for direct vent applications — **ALL OPENING SIZES ARE FREE AREA**

Air openings The required air opening sizes below are FREE AREA, after reduction for louver obstruction. Note the exception below for large spaces.	***SVF*™ boiler *WITH* other appliances in room**	***SVF*™ boiler WITHOUT other appliances in room**
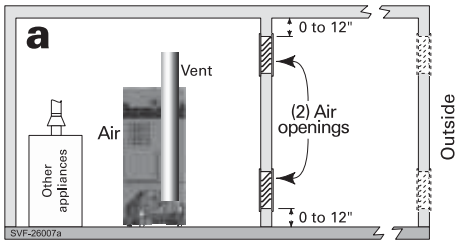	**TWO** openings, each at least: **1** square inch per **1,000** Btuh of all other appliances in the room, but not less than 100 in².	**NO** openings are required if the boiler installation provides at least the Recommended service clearances shown on page 7. If the space is smaller, provide ONE opening to a larger room with at least **1** square inch per **3,000** Btuh of ***SVF***™ boiler input.
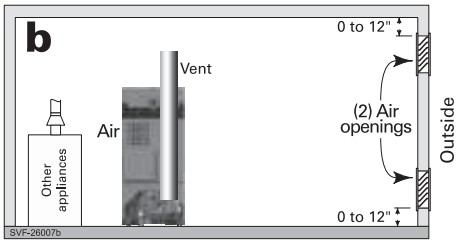	**TWO** openings, each at least: **1** square inch per **2,000** Btuh of all other appliances in the room — OR — **ONE** opening **, each at least: **1** square inch per **3,000** Btuh of all other appliances in the room.	**NO** openings are required if the boiler installation provides at least the Recommended service clearances shown on page 7. If the space is smaller, provide ONE opening to a larger room with at least **1** square inch per **3,000** Btuh of ***SVF***™ boiler input.
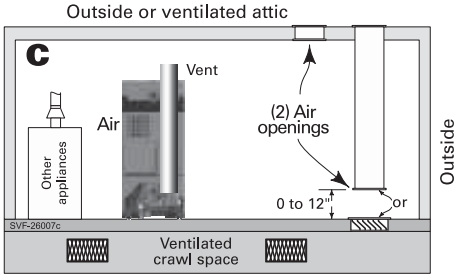	**TWO** openings, each at least: **1** square inch per **2,000** Btuh of all other appliances in the room — OR — **ONE** opening **, each at least: **1** square inch per **3,000** Btuh of all other appliances in the room.	**NO** openings are required if the boiler installation provides at least the Recommended service clearances shown on page 7. If the space is smaller, provide ONE opening to a larger room with at least **1** square inch per **3,000** Btuh of ***SVF***™ boiler input.
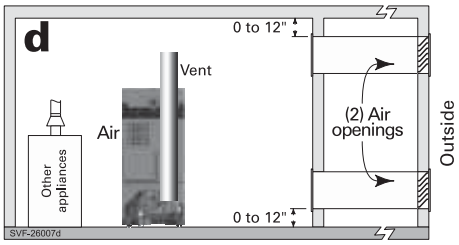	**TWO** openings, each at least: **1** square inch per **2,000** Btuh of all other appliances in the room — OR — **ONE** opening **, each at least: **1** square inch per **3,000** Btuh of all other appliances in the room.	**NO** openings are required if the boiler installation provides at least the Recommended service clearances shown on page 7. If the space is smaller, provide ONE opening to a larger room with at least **1** square inch per **3,000** Btuh of ***SVF***™ boiler input.
**** NOTICE:** **Requirements for using the SINGLE air opening option.**	A single combustion air opening can be used for cases **b**, **c** or **d** above, sized as listed, provided that: • The single opening must communicate directly to the outdoors or to a space that communicates directly with outdoors (NOT to an interior space). • The top of the opening must be within 12 inches of the ceiling. • The free area of the opening must be at least equal to the sum of the areas of all equipment vent connectors in the space.	
SPECIAL EXCEPTION FOR LARGE SPACES:	NO combustion air openings are needed when the boiler (and other appliances) are installed in a space with a volume NO LESS than 50 cubic feet per 1,000 Btuh of all appliances in the space. That is, total the input of all appliances in MBH (1,000's of Btuh), then multiply this total times 50. The building MUST NOT be of tight construction. Example: For a total input of 1500 MBH (1,500,000 Btuh) and an 8-foot ceiling height, the minimum volume would be 50 x 1500 = 74,000 cubic feet.	

DIRECT VENT — Sidewall Termination location (Category IV)

Figure 34 DIRECT VENT INSTALLATIONS — Requirements for termination location — clearances and placement

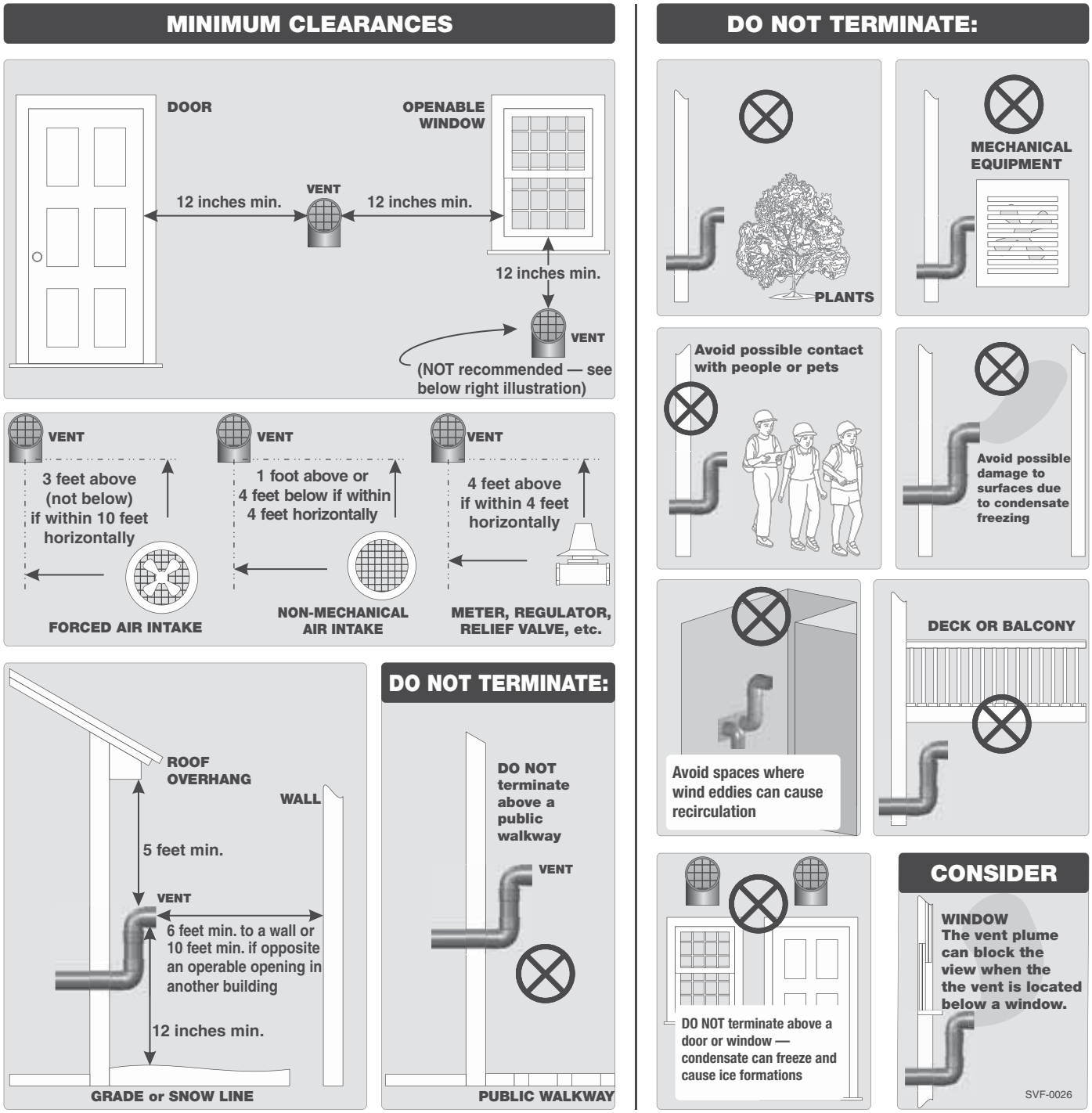

WARNING **Vent Termination Locations** – the minimum distance from adjacent public walkways, adjacent buildings, openable windows and building openings shall not be less than those values specified in the National Fuel Gas Code - ANSI Z223.1/NFPA 54 – latest edition, and/or the Natural Gas and Propane Installation Code, CAN/CSA B149.1. Vent and air terminations must be installed at least 12 inches (0.31m) above grade and snow line. Consideration should be given to avoid possible damage caused by vent plumes and condensate when choosing a venting configuration and location. Maintain a minimum distance of at least 4 ft. (1.22m) horizontally from, and in no case above or below, unless a 4 ft. (1.22m) horizontal distance is maintained, from electrical meters, gas meters, regulators, and relief equipment.

DIRECT VENT — Sidewall (Category IV)

Figure 35 Sidewall direct vent terminations — vent and air

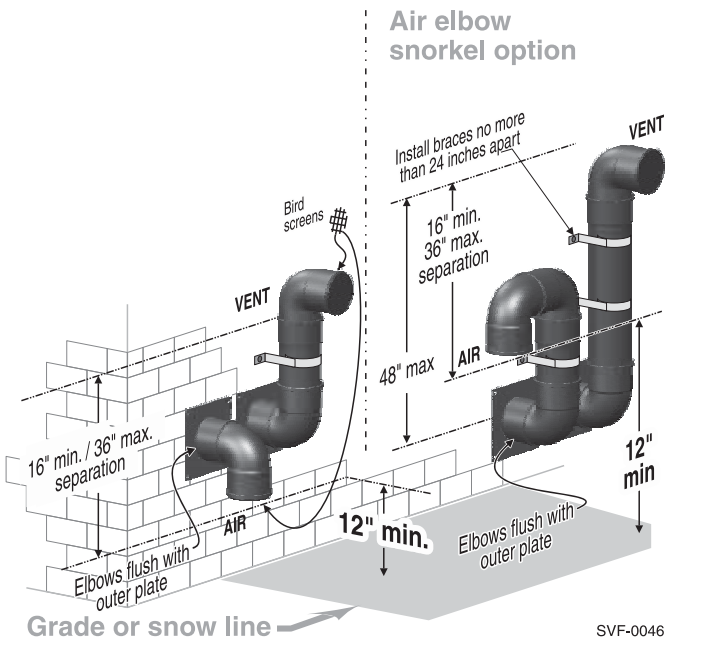

WARNING **Use only the vent/air materials and kits listed in Figure 22, page 27.**

Read and follow all instructions in this manual. **DO NOT proceed with vent/air installation until you have read page 25 through page 35 and page 38 through page 40.**

Locate the termination such that the total vent piping from the boiler to the termination **will not exceed the maximum length given in Figure 25, page 31.**

Comply with all vent system manufacturer's instructions.

Provide a vent manufacturer's Vent Adapter and reducer (if needed) at the boiler vent connection.

Every joint on **polypropylene vent piping must** include a locking collar. Failure to supply locking collars could result in vent/air piping leakage.

Determine termination location

1. The vent termination must be installed as shown in Figure 35 and in Figure 37, page 42.
2. The termination placement must comply with clearances and limitations shown in Figure 28, page 35.
3. Locate the terminations so they are not likely to be damaged by foreign objects, such as stones or balls, or subject to buildup of leaves or sediment.
4. Ensure proper clearance above grade or snow line. Keep vents/air intake area clear of accumulating snow.
5. Install the boiler in a location that allows proper routing of all vent and air piping from the boiler vent and air connections to the selected sidewall location.

WARNING Do not exceed the maximum lengths of the outside vent piping shown in Figure 35. Excessive length exposed to the outside could result in freezing of condensate in the vent pipe or vent/air piping failure. Follow vent/air pipe manufacturer's instructions for proper protection and support of the piping. In extremely cold climates, install an insulated chase around the vent piping, particularly when using longer lengths. (DO not insulate nonmetallic vent pipe, if used.) The chase must allow for inspection of the vent pipe, and insulation must be protected from water.

Multiple vent terminations

1. When terminating multiple ***SVF***™ boilers, terminate each vent connection as described in this manual. See Figure 36, page 42 for a typical layout.
2. Place wall penetrations to obtain minimum clearances shown in Figure 35 and in Figure 36, page 42 for U. S. installations.
3. For Canadian installations, provide clearances required by Natural Gas and Propane Installation Code - CAN/CSA B149.1. Installation Code and a ULC S636 compliant vent kit.

Install vent piping

NOTICE **USE SWEEP ELBOWS FOR ALL VENT AND AIR PIPING WHEN POSSIBLE** — Short-radius elbows cause higher pressure loss, resulting in less allowable vent/air piping length. See Figure 25, page 31 for maximum lengths and reductions required for fittings.

1. Install the vent manufacturer's vent adapter, if needed to adapt to the vent size/material being used. Follow all vent manufacturer's instructions.
2. Slope vent piping toward the boiler — slope vent piping a minimum of ¼ inch per foot in horizontal runs or larger per vent pipe manufacturer's instructions.
3. Support piping independently of the boiler — Install pipe supports every 5 feet on both the horizontal and vertical runs. Install a hanger support within 6 inches of any upturn in the piping. Or follow vent pipe manufacturer's instructions.

Install vent termination fittings

1. Maintain the required dimensions of the finished termination piping as shown in Figure 29, page 36.
2. Air pipe penetration:
   a. Cut a hole for the air pipe, sized per the vent/air pipe manufacturer's instructions.

DIRECT VENT — Sidewall (Category IV) *(continued)*

3. Vent pipe penetration:
   a. Cut a hole for the vent pipe.
   b. For combustible construction, size the vent pipe hole at least ⅜" larger than the vent pipe diameter, or larger if specified by the vent manufacturer.
   c. For noncombustible construction, size the opening per vent manufacturer instructions.
   d. Insert a corrosion-resistant metal thimble in the vent pipe hole as shown in Figure 31.
   e. Follow all local codes for isolation of vent pipe when passing through floors or walls.
4. Figure 37 — Provide and install corrosion-resistant metal stop plates (item 3) as shown.
   a. The hole size in the stop plates must be just larger than the vent pipe diameter.
   b. Obtain stop plates ONLY from the vent pipe manufacturer.
5. Insert the last lengths of vent and air pipe from the outside. The shoulders of the vent and air pipe female ends must rest against the outer stop plates as shown. The plates must prevent the vent or air pipe from being pushed inward.
6. The vent and air pipes may run up as high as 4 feet with no enclosure. The vent and air pipes must be secured with braces, and all clearances and lengths must be maintained. Space braces no further than 24 inches apart.
7. External venting greater than 4 feet requires an insulated enclosure around the vent and air pipes. The vent and air terminations must exit through the enclosure as shown in the illustration above, maintaining all required clearances.
8. Attach the exterior piping and termination elbows.
9. Install a vent/air pipe manufacturer's bird screen in the open end of the vent termination elbow and air termination elbow.
10. Seal exterior openings thoroughly with exterior caulk.
11. For multiple boiler terminations, see Figure 36.

Figure 36 Multiple terminations — clearance from vent of one to air intake of the next (normal and snorkel layouts).

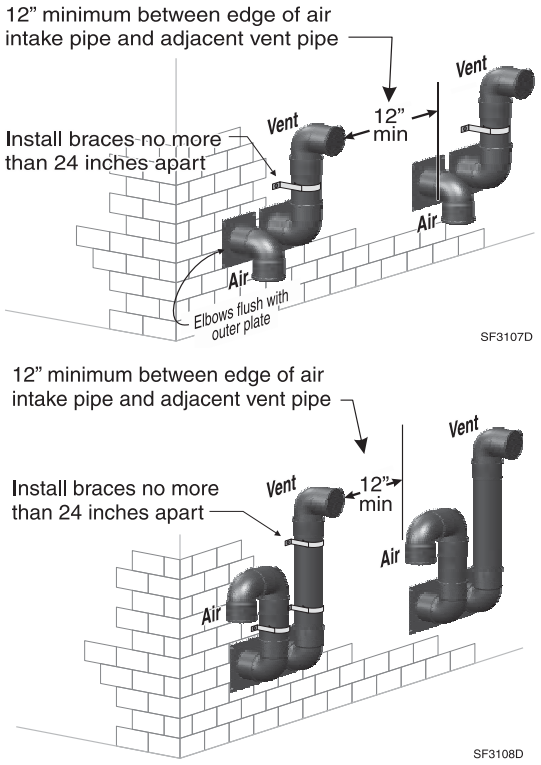

Figure 37 DIRECT VENT — sidewall termination assembly.

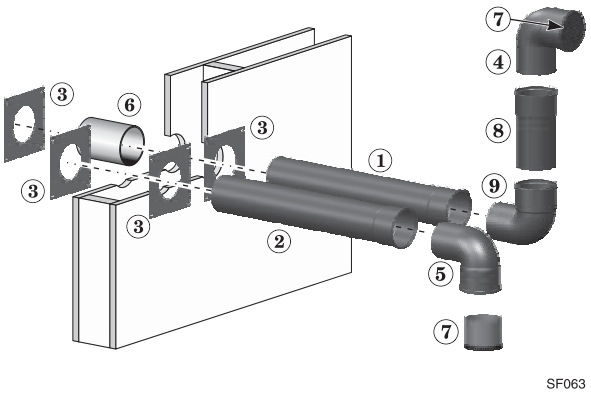

1. Vent piping — insert from the outside until the female end shoulder rests against the outside stop plate.
2. Air piping — insert from the outside until the female end shoulder rests against the outside stop plate.
3. Sidewall termination plates (hole must be just larger than the pipe diameter).
4. Vent termination elbow — use outward-facing 90-degree elbow as shown.
5. Air termination elbow — use down-turned 90-degree elbow as shown.
6. Corrosion-resistant thimble, by installer.
7. Bird screens, by installer.
8. Vent length.
9. Elbow.

DIRECT VENT — Vertical
(Category IV)

Figure 38 Vertical direct vent terminations (air termination can be vertical or sidewall as shown below).

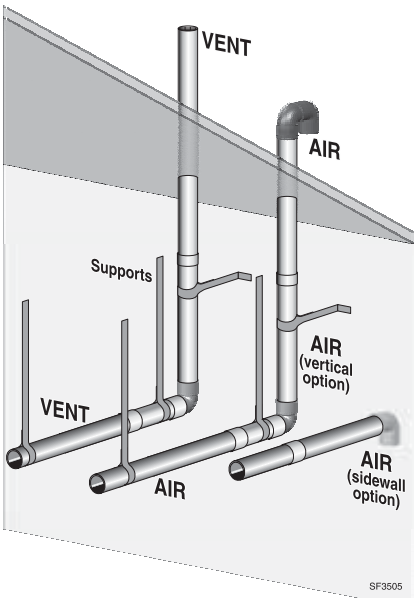

⚠WARNING **Use only the vent/air piping materials and kits listed in Figure 22, page 27.**

Read and follow all instructions in this manual. **DO NOT proceed with vent/air piping installation until you have read page 25 through page 35 and page 38 through page 40.**

Locate the termination such that the total vent piping from the boiler to the termination **will not exceed the maximum length given in Figure 25, page 31.**

Comply with all vent system manufacturer's instructions.

Provide a vent manufacturer's vent adapter and reducer (if needed) at the boiler vent connection.

Every joint on **polypropylene vent piping must** include a locking collar. Failure to supply locking collars could result in vent/air piping leakage.

Determine termination location

1. The vent and air terminations must be installed as shown in Figure 38. The air termination can be either through the roof or through a side wall, as shown.
2. The termination placement must comply with clearances and limitations shown in Figure 28, page 35.
3. Locate the terminations so they are not likely to be damaged by foreign objects, such as stones or balls, or subject to buildup of leaves or sediment.
4. Ensure proper clearance above grade or snow line. Keep vents/air intake area clear of accumulating snow.
5. Install the boiler in a location that allows proper routing of all vent and air piping from the boiler vent and air connections to the selected termination locations.

⚠WARNING Do not exceed the maximum lengths of the outside vent and air piping shown in Figure 40, page 44. Excessive length exposed to the outside could result in freezing of condensate in the vent pipe or vent/air piping failure. Follow vent/air pipe manufacturer's instructions for proper protection and support of the piping and for installations in very cold climates.

Multiple vent terminations

1. When terminating multiple ***SVF***™ boilers, terminate each vent connection as described in this manual. When using sidewall air terminations, place terminations at least 6 inches apart.

⚠WARNING Terminate all vent pipes at the same height and all air pipes at the same height to avoid possibility of severe personal injury, death or substantial property damage.

2. Place roof penetrations to obtain minimum clearance of 12 inches between edge of air intake elbow and adjacent vent pipe of another boiler for U. S. installations (see Figure 39, page 44).
3. For Canadian installations, provide clearances required by Natural Gas and Propane Installation Code - CAN/CSA B149.1 Installation Code and a ULC S636 compliant vent kit.

Install vent piping

NOTICE **USE SWEEP ELBOWS FOR ALL VENT PIPING WHEN POSSIBLE** — Short-radius elbows cause higher pressure loss, resulting in less allowable vent/air piping length. See Figure 25, page 31 for maximum lengths and reductions required for fittings.

1. Install the vent manufacturer's vent adapter, if needed to adapt to the vent size/material being used. Follow all vent manufacturer's instructions.
2. Slope vent piping toward the boiler — slope vent piping a minimum of ¼ inch per foot in horizontal runs or larger per vent pipe manufacturer's instructions.
3. Support piping independently of the boiler — Install pipe supports every 5 feet on both the horizontal and vertical runs. Install a hanger support within 6 inches of any upturn in the piping. Or follow vent/air pipe manufacturer's instructions.

DIRECT VENT — Vertical *(continued)* (Category IV)

Install vent and air terminations

1. Air pipe penetration
   a. Cut a hole for the air pipe, sized per the vent/air pipe manufacturer's instructions.
2. Vent pipe penetration:
   a. Cut a hole for the vent pipe.
   b. For combustible construction, size the vent pipe hole at least ⅜" larger than the vent pipe diameter, or larger if specified by the vent manufacturer.
   c. For noncombustible construction, size the opening per vent manufacturer instructions.
   d. Insert a corrosion-resistant metal thimble in the vent pipe hole.
   e. Follow all local codes for isolation of vent pipe when passing through floors, ceilings and roofs.
3. Vertical terminations, both vent and air
   a. Provide flashing and sealing boots sized for the vent pipe.
   b. Use a coupling or open-end pipe termination, following vent manufacturer's guidelines for vertical terminations.
   c. Install a vent/air pipe manufacturer's bird screen in the open ends of the terminations.
   d. Maintain the required dimensions of the finished termination piping as shown in Figure 40.
4. Vertical vent termination with sidewall air termination
   a. See Figure 41, page 45.
   b. Figure 42, page 45 — Provide and install corrosion-resistant metal stop plates (item 3) as shown.
   c. The hole size in the stop plates must be just larger than the vent pipe diameter.
   d. Obtain stop plates ONLY from the vent pipe manufacturer.
   e. Insert the last length of air pipe from the outside. The shoulder of the air pipe female end must rest against the outer stop plate as shown. The plate must prevent the air pipe from being pushed inward.
   f. Insert the termination elbow into the air pipe end.
   g. Install a vent manufacturer's bird screen in the open end of the vent termination elbow.
   h. Seal exterior openings thoroughly with exterior caulk.

Figure 39 Vertical vent and air terminations.

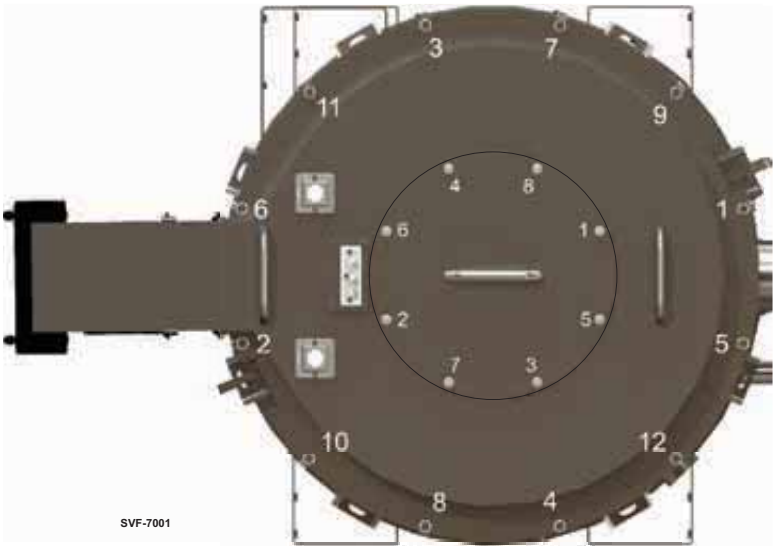

Figure 40 Termination location — multiple boilers — vent and air piping vertical.

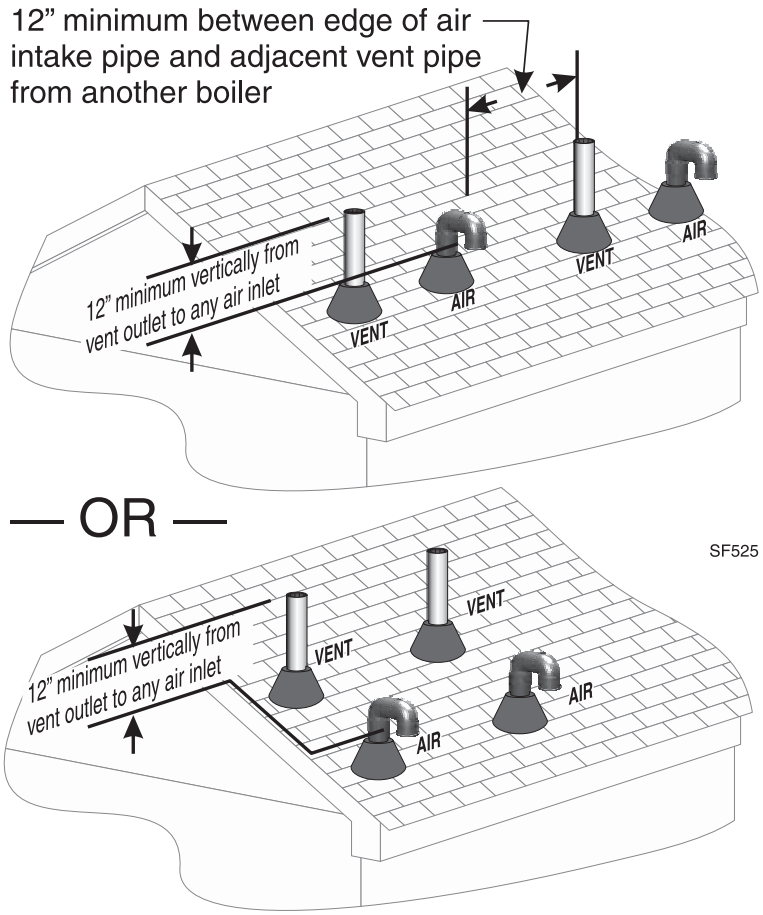

DIRECT VENT — Vertical *(continued)* (Category IV)

Figure 41 Termination location — multiple boilers — vertical vent/sidewall air.

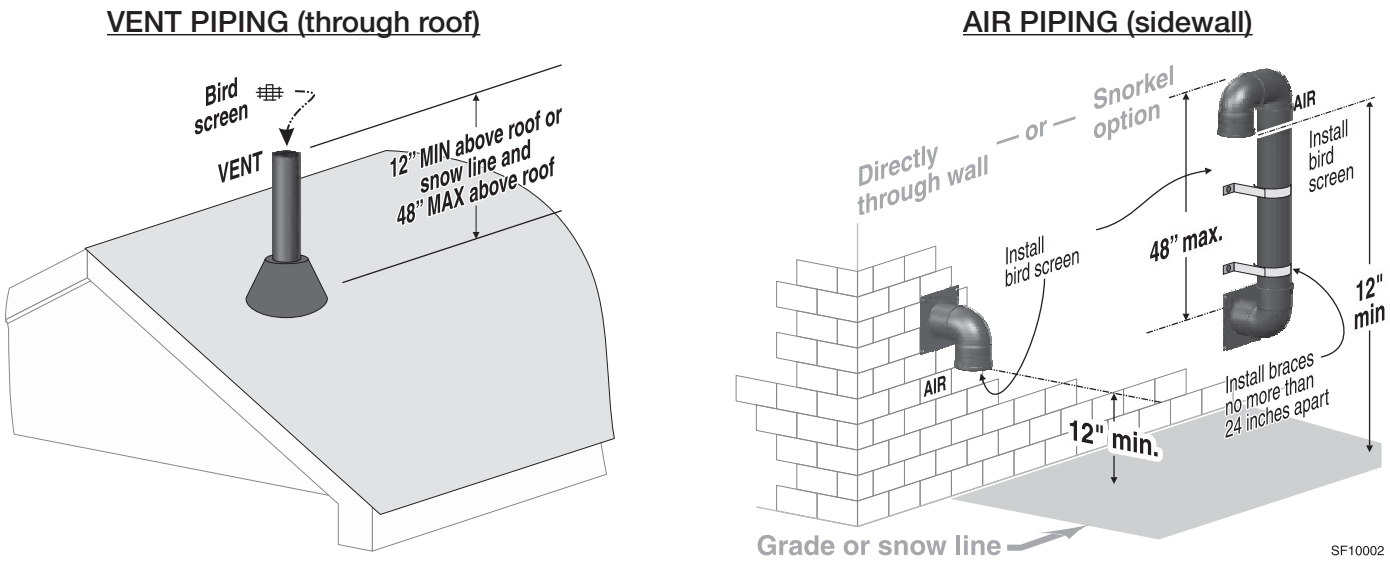

WARNING **Multiple boiler applications** — Space vents minimum 6 inches apart. Space air terminations minimum 6 inches apart.

Figure 42 Sidewall air termination assembly — vertical vent with sidewall air.

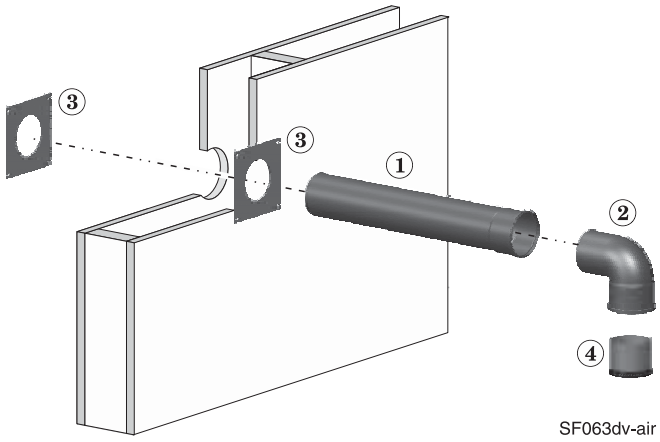

1. Air piping — must extend through wall enough for complete engagement of the air termination elbow.
2. Air termination elbow — must be down-turned 90-degree elbow.
3. Sidewall termination plates (hole must be just larger than the air pipe diameter).
4. Bird screen, by installer.

Install condensate components

Install the condensate trap

1. Insert the ¾" PVC elbow through the inlet connection ferrule nut.
2. Slide the condensate trap inlet gasket up onto the ¾" PVC elbow.
3. Ensure condensate trap float is in place.
4. Tighten the inlet connection ferrule nut onto the condensate trap. Ensure connection is fully tightened.
5. Slide the 1" Fernco fitting onto the ¾" PVC elbow. Tighten the hose clamp with a 5/16" nut driver or flat head screwdriver.
6. Ensure bottom condensate trap connection is fully tightened.
7. Slide the condensate trap onto the heat exchanger condensate drain. Tighten the hose clamp with a 5/16" nut driver or flat blade screwdriver.
8. Secure the condensate trap bracket to the boiler base.
9. Secure the condensate trap to the condensate trap bracket using the U-bolt.

WARNING The condensate trap float MUST be in place in the condensate trap assembly to prevent possible flue gas leakage through the condensate drain system.

Connect condensate line

1. Use 3/4" PVC or CPVC pipe to route condensate to a drain or condensate pump.

NOTICE Use materials approved by the authority having jurisdiction. In the absence of other authority, PVC and CPVC pipe must comply with ASTM D1785, F441 or D2665. Cement and primer must comply with ASTM D2564 or F493. For Canada, use CSA or ULC certified PVC or CPVC pipe, fittings and cement.

2. If installing a condensate pump, select one approved for use with condensing boilers and furnaces. The pump should have an overflow switch to prevent property damage from condensate spillage. See Figure 43 for required flow capacity. Provide an external power source for the condensate pump.
3. When sizing condensate pumps, make sure to include the total load of all ***SVF***™ boilers connected.

WARNING The condensate line must remain unobstructed, allowing free flow of condensate. If condensate is allowed to freeze in the line or if the line is obstructed in any other manor, condensate can back up into the boiler, eventually leading to boiler lockout.

NOTICE Condensate from the boiler will be slightly acidic (typically with a pH from 3.2 to 4.5). Install a neutralizing filter if required by local codes. See Replacement parts section at the end of this manual for a Weil-McLain condensate neutralizer kit.

Figure 43 Condensate pump capacity, GPH

Minimum recommended condensate pump capacity per boiler, GPH	
SVF 1500	35
SVF 2000	45
SVF 2500	57
SVF 3000	67

Figure 44 Condensate trap assembly

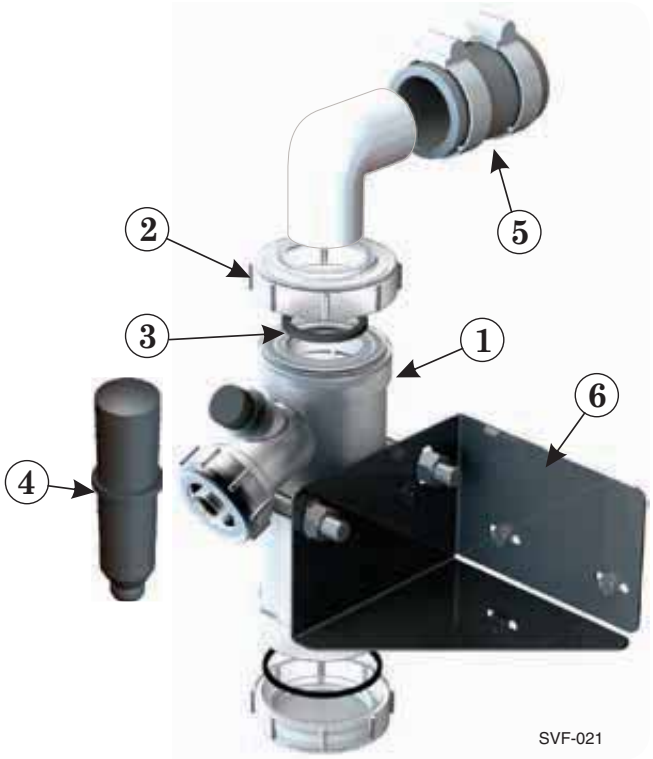

1. Condensate trap body.
2. Inlet connection ferrule nut.
3. Condensate trap inlet gasket.
4. Condensate trap float (inside trap body).
5. Fernco Fitting 1"
6. U-bolt, bracket and hardware.

Figure 45 Condensate trap assembly, installed

Gas piping

Connecting gas supply piping

1. Connect gas supply piping to the boiler, see Figure 46.
   a. Install a union for servicing, when required.
   b. Install a manual shutoff valve in the gas supply piping, within 6 feet of the boiler.
   c. In Canada, the manual gas valve must be identified by the installer.
2. Support gas piping with hangers or other devices, not by the boiler or its accessories.
3. Use pipe dope compatible with propane gases (because natural gas may contain some propane). Apply sparingly only to male threads of pipe joints so that pipe dope does not block gas flow.

WARNING Failure to apply pipe dope as detailed above can result in severe personal injury, death or substantial property damage.

WARNING ***SVF*** boilers are shipped ready to fire natural gas ONLY. You must install the propane conversion kit if the boiler will be connected to propane. See page 12 for instructions. Failure to comply could result in severe personal injury, death or substantial property damage.

WARNING Install a 100% lock-up gas pressure regulator as defined by ANSI Z21.80 in the gas supply line if inlet pressure can exceed 14" w.c. at any time. Lock-up regulators can have pressure spikes of 5" w.c. or 150% of setting, which ever is greater.

Adjust the lockup regulator for inlet pressure below 10" w.c. with the boiler at minimum input rate. This setting provides a cushion below the setting of the high gas pressure switch. Gas pressure can be adjusted higher or lower as needed. Failure to comply could result in shutdown by the high gas pressure switch, resulting in possible serious property damage due to freeze-up.

Check Natural or LP gas supply pressure

1. Purge all air from the gas supply piping.
2. Before placing the boiler in operation, check the boiler and its gas connection for leaks.
   a. Close manual main shutoff valve during any pressure testing at less than 20" w.c.
   b. Disconnect the boiler gas connection from the gas supply piping during any pressure testing greater than 20" w.c.

WARNING Do not check for gas leaks with an open flame — use a soapy water bubble test. Failure to eliminate gas leaks can cause severe personal injury, death or substantial property damage.

Check Natural or LP gas supply pressure

1. Connect a manometer or pressure gauge to a hose barb fitting (installer supplied) in port #2 in the side of the gas valve, see See Figure 47.
2. The pressure required at the gas valve test port (verify minimum gas pressure when all gas appliances are in operation):
   a. Minimum gas pressure, with gas flowing — 3.5" w.c. — verify during boiler startup, while boiler is at high fire.
   b. Maximum: certified to 14" w.c. with no flow (lockup) or with boiler on. Set the supply gas pressure regulator so the supply pressure is far enough below 14" w.c. to ensure that varying pressure conditions won't trip the high gas pressure switch (set at 14" w.c.). See 100% lock-up regulator Warning above.

WARNING **Use two wrenches when tightening gas piping at boiler**, using one wrench to prevent the boiler gas line connection from turning. Failure to support the boiler gas connection pipe to prevent it from turning could damage gas line components.

Figure 46 Connect gas supply piping (all fittings and gas valve supplied by installer)

Figure 47 Gas valve inlet pressure inlet tap port #2

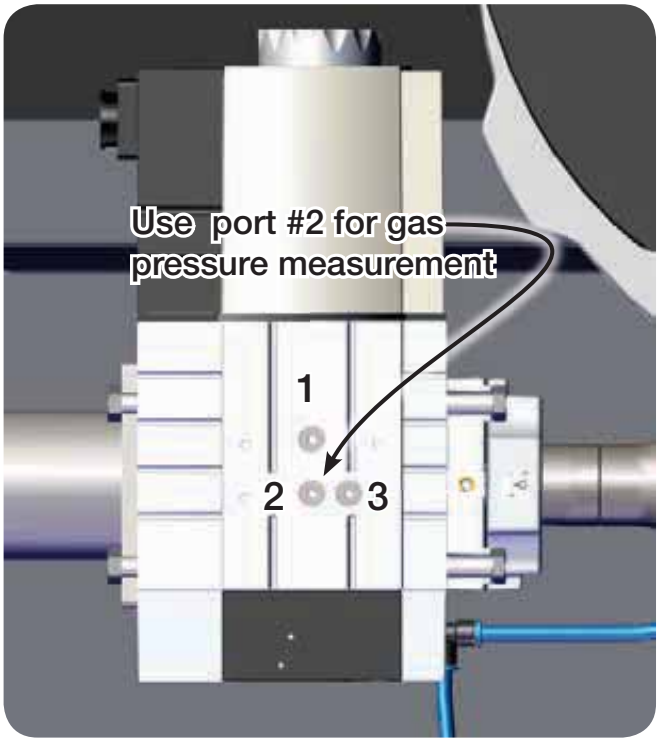

Gas piping *(continued)*

Pipe sizing for Natural Gas

1. Size gas supply piping from meter outlet to entrance of boiler in accordance with Figure 48 and Figure 49.
2. Use the total input of all connected appliances. Divide the total input in Btuh by 1,000 to obtain approximate cubic feet per hour of natural gas.
   a. Pipe lengths in Figure 48 are equivalent lengths of straight pipe. Use Figure 49 to determine equivalent length of fittings.
   b. Figure 48 is only for natural gas with specific gravity 0.60, with a pressure drop through the gas piping of 0.30" w.c.
   c. For additional gas pipe sizing information, refer to ANSI Z223.1/NFPA 54 - latest edition (or Natural Gas and Propane Installation Code - CAN/CSA B149.1 for Canadian installations).

Pipe sizing for propane gas

Contact gas supplier to size pipes, tanks and 100% lockup gas pressure regulator. Gas pipe must be properly sized with a 100% lockup gas pressure regulator in the gas supply line. An undersized gas pipe feeding the boiler(s) can cause problems.

Multiple boiler applications —manifolded gas supply lines

1. Size gas supply piping as instructed above.
2. At each boiler, provide a manual shutoff gas valve, union and sediment trap (minimum 3 inches below tee) as shown in Figure 46, page 47.
3. Ensure the piping is large enough so that the minimum pressure at each boiler, with all connected appliances firing, will be as specified on page 47.

Gas pressure switches

1. *SVF*™ boilers are equipped with manual reset high gas pressure and low gas pressure switches (see Figure 47, page 47).
2. These switches are factory set and should remain at the following settings:
   a. High gas pressure: 14 inches w.c.
   b. Low gas pressure: 2 inches w.c.

NOTICE The low gas pressure switch must be manually reset (button on front of switch) on initial startup or any time the gas supply is turned off.

Figure 48 Pipe capacity for natural gas

Gas pipe total length (feet)	Gas supply pipe capacity (cubic feet per hour) @ 0.30" w.c. pressure drop (cubic feet per hour, 0.60 specific gravity)			
	2"	2½"	3"	4"
10	3050	4800	8500	17500
20	2100	3300	5900	12000
30	1650	2700	4700	9700
40	1450	2300	4100	8300
50	1270	2000	3600	7400
70	1050	1700	3000	6200
100	870	1400	2500	5100
150	710	1130	2000	4100

Figure 49 Equivalent lengths of straight pipe for gas line fittings

Pipe size inches	Equivalent length, feet	
	90° Elbow	Tee
2"	5.17	10.3
2½"	6.16	12.3
3"	7.67	15.3
4"	10.1	20.2

Gas Train Diagram

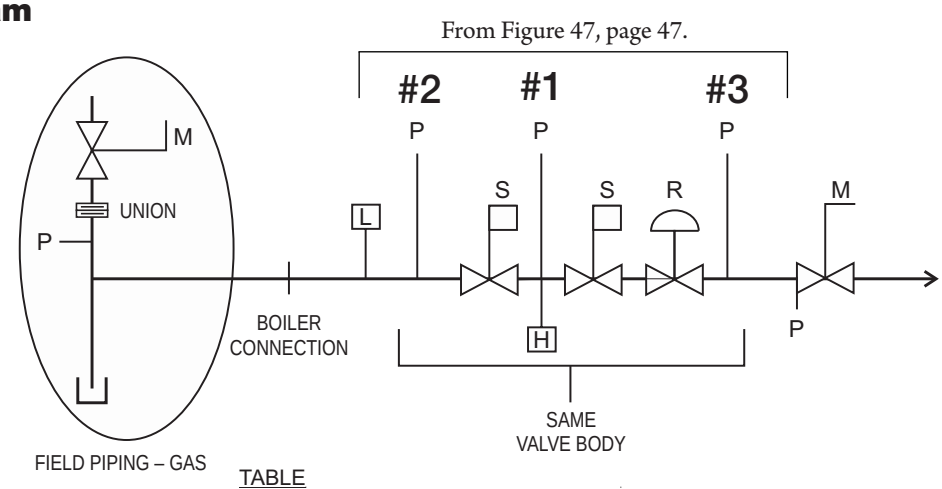

TABLE

S = SAFETY SHUT–OFF VALVE	L = LOW GAS PRESSURE SWITCH
R = ZERO GOVERNOR REGULATOR	H = HIGH GAS PRESSURE SWITCH
M = MANUAL SHUT–OFF VALVE	P = PRESSURE TAP

Field wiring (see Figure 51 through Figure 58)

WARNING **ELECTRICAL SHOCK HAZARD** — For your safety, turn off electrical power supply at service entrance panel before making any electrical connections to avoid possible electric shock hazard. Failure to do so can cause severe personal injury or death.

NOTICE The installation must comply with: National Electrical Code and any other national, state, provincial or local codes or regulations. In Canada, CSA C22.1 Canadian Electrical Code Part 1, and any local codes.

NOTICE Wiring must be N.E.C. Class 1. If original wiring as supplied with boiler must be replaced, use only type 105 °C wire or equivalent. Boiler must be electrically grounded as required by National Electrical Code ANSI/NFPA 70 – latest edition, and/or the Canadian Electrical Code Part I, CSA C22.1, Electrical Code.

NOTICE The boiler when installed, must be electrically bonded to ground in accordance with the requirements of the authority having jurisdiction or, in the absence of such requirements, with the National Electrical Code, ANSI/NFPA 70 – latest edition, and/or the Canadian Electrical Code Part I, CSA C22.1, Electrical Code.

NOTICE Do not use 24V from transformer to power any external devices that are not listed in this manual.

Wire entrances

Twelve (12) knockouts are provided in the rear of terminal box for line and low voltage wiring. See Figure 50 for locations.

WARNING

Installer MUST use a strain relief through jacket knockouts. Failure to do so can cause severe personal injury, death or substantial property damage.

Wiring overview

See details on the following pages for the wiring connections outlined below:

Required wiring connections:

SVF 1500/2000 Single phase

- 120VAC power to boiler; 120VAC power out to boiler circulator; system supply and return temperature sensors.
- Boiler load: ***SVF 1500/2000*** — 23.17 Amps

SVF 2500/3000 Three phase

- 208VAC -3 phase Wye - transformer with neutral and ground for power to blower; 120VAC power out to boiler circulator; system supply and return temperature sensors.
- Boiler load: ***SVF 2500/3000*** — 16.22 Amps on L1;
  6.90 Amps on L2;
  6.90 Amps on L3.

Connections as needed by systems

- Thermostat, end switch or other inputs for call for heat.
- System zone circulators, valves, relays, etc.
- System circulator, when required.
- Outdoor temperature sensor.

Optional wiring connections

- External limits; Closure switch interlocks (combustion air damper, flow switch, etc.); 0–10VDC for target or modulation control; remote alarm; additional heat demand contact; and communication cables for boiler networking and/or building management system interface (MODBUS).

Figure 50 Wiring entrances in terminal box rear of boiler

Line voltage power input

1. Boiler line voltage power — Provide and install a fused disconnect or service switch as required by applicable codes. Fuse or breaker rating must be sized accordingly.
2. Boiler Circ activation circuit — Provide external power for pump's, 120VAC/single-phase, size as required for the pump load. Interrupt pump's hot line or enable circuit with the connections on EP7 screw rear terminal block. Maximum current rating of relay is 10 Amps.

Continued after page 58

Field wiring Single Phase Schematic Diagram

Figure 51 Single Phase Schematic wiring diagram — *SVF*™ boilers (continued on next page)

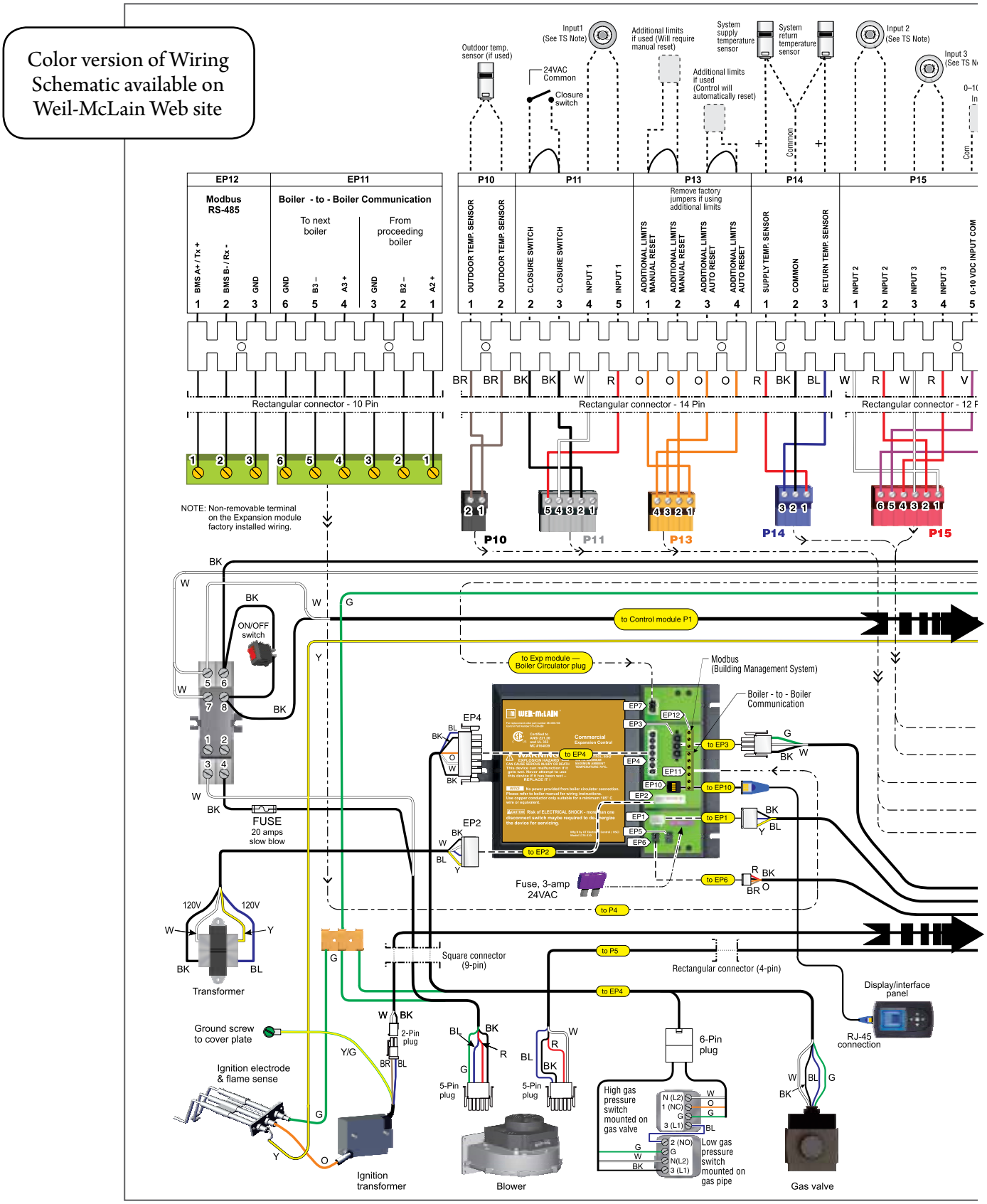

Field wiring Single Phase Schematic Diagram *(continued)*

Figure 52 Single Phase Schematic wiring diagram — ***SVF***™ boilers (continued on previous page)

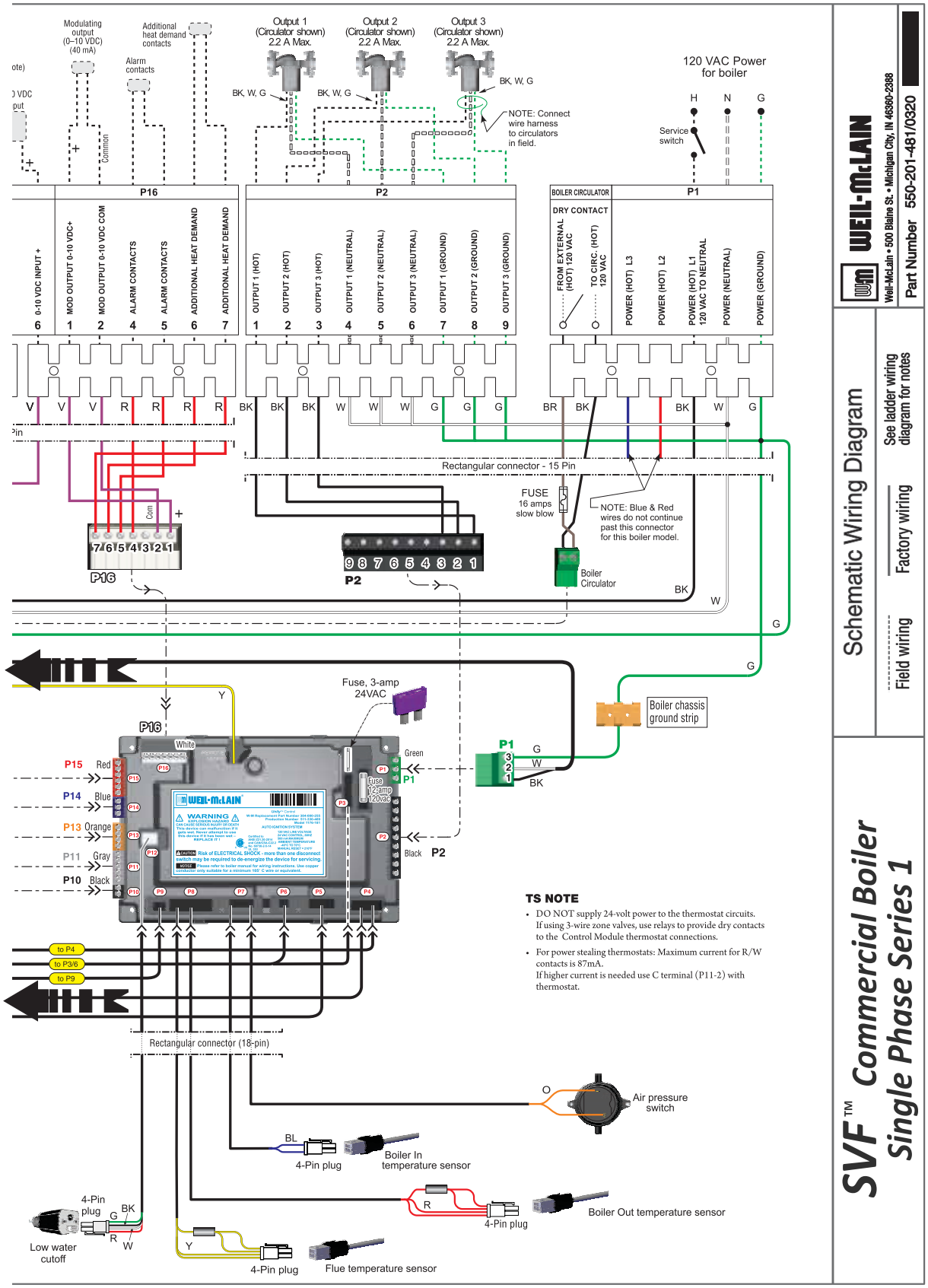

TS NOTE

- DO NOT supply 24-volt power to the thermostat circuits. If using 3-wire zone valves, use relays to provide dry contacts to the Control Module thermostat connections.
- For power stealing thermostats: Maximum current for R/W contacts is 87mA. If higher current is needed use C terminal (P11-2) with thermostat.

Field wiring Single Phase Ladder Diagram *(continued)*

Figure 53 Single Phase Ladder wiring diagram — ***SVF***™ boilers (continued on next page)

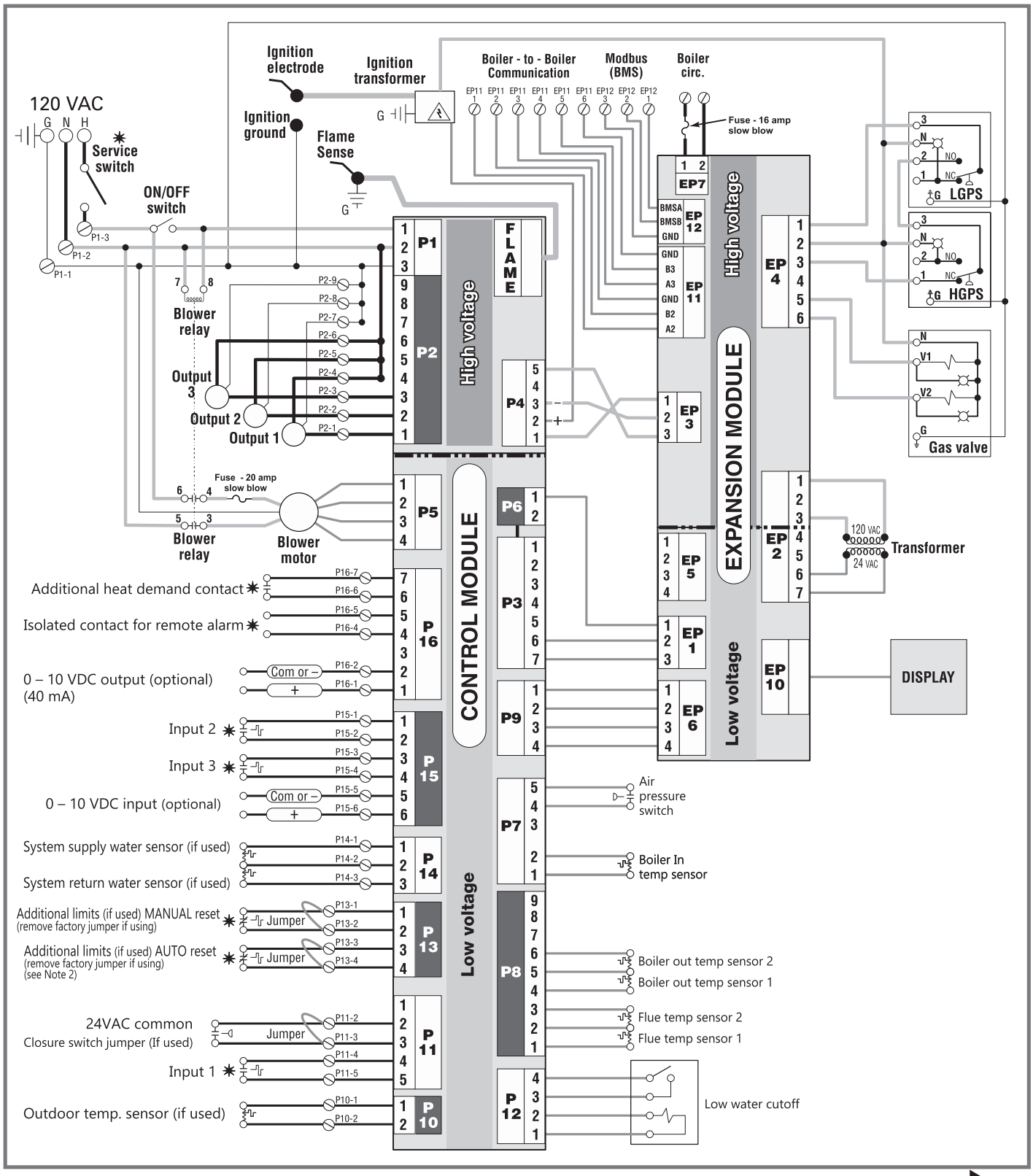

Field wiring Single Phase Ladder Diagram *(continued)*

Figure 54 Single Phase Ladder wiring diagram — ***SVF™*** boilers (continued on previous page)

SVF™ Commercial Boiler Single Phase Series 1
Ladder Wiring Diagram

⚠WARNING

Electrical shock hazard — can cause severe injury or death. Disconnect power before installing or servicing.

NOTICE

All contacts shown without power applied.

✷ Indicates items not provided

Legend for ladder wiring diagram only

- 120 vac field wiring
- Low voltage field wiring
- 120 vac factory wiring
- Low voltage factory wiring
- High voltage spark ignition wiring
- Ground connectors

Notes for Schematic and Ladder Diagrams

1. All wiring must be installed in accordance with:
   U.S.A. — N.E.C. And any other national, state, or local code requirements.
   Canada — C.S.A. C22.1 C.E.C. Part 1 and any other national, provincial, or local code requirements.
2. Connect additional limits (if used) between terminals P13-1 and P13-2 if the boiler control module is to manual reset on limit action. Connect between terminals P13-3 and P13-4 for automatic reset. Remove jumper across terminals used.
3. If any of the original wire as supplied with the appliance must be replaced, use minimum 105 °C wire or equivalent. Exceptions: Ignition lead wire must be obtained from Weil-McLain only.
4. Thermostat anticipator setting (single zone) — set anticipator for 0.1 amps.
5. For multiple zoning, use either zone valves or circulators. Refer to the component manufacturer's instructions and this manual for application and wiring suggestions. Boiler circulator must remain with boiler, and cannot be used for system circulation in any way.
6. Refer to control component instructions packed with the boiler for application information.
7. Provide power source to boiler that is protected by a surge protector. Amperage requirements for boilers are:
   SVF 1500 — 23.17 amps
   SVF 2000 — 23.17 amps

Fuse or breaker rating must be sized accordingly.

WEIL-McLAIN
Weil-McLain • 500 Blaine St. • Michigan City, IN 46360-2388

Part Number 550-201-482/0519

Field wiring Three Phase Schematic Diagram

Figure 55 Three Phase Schematic wiring diagram — *SVF*™ boilers (continued on next page)

Color version of Wiring Schematic available on Weil-McLain Web site

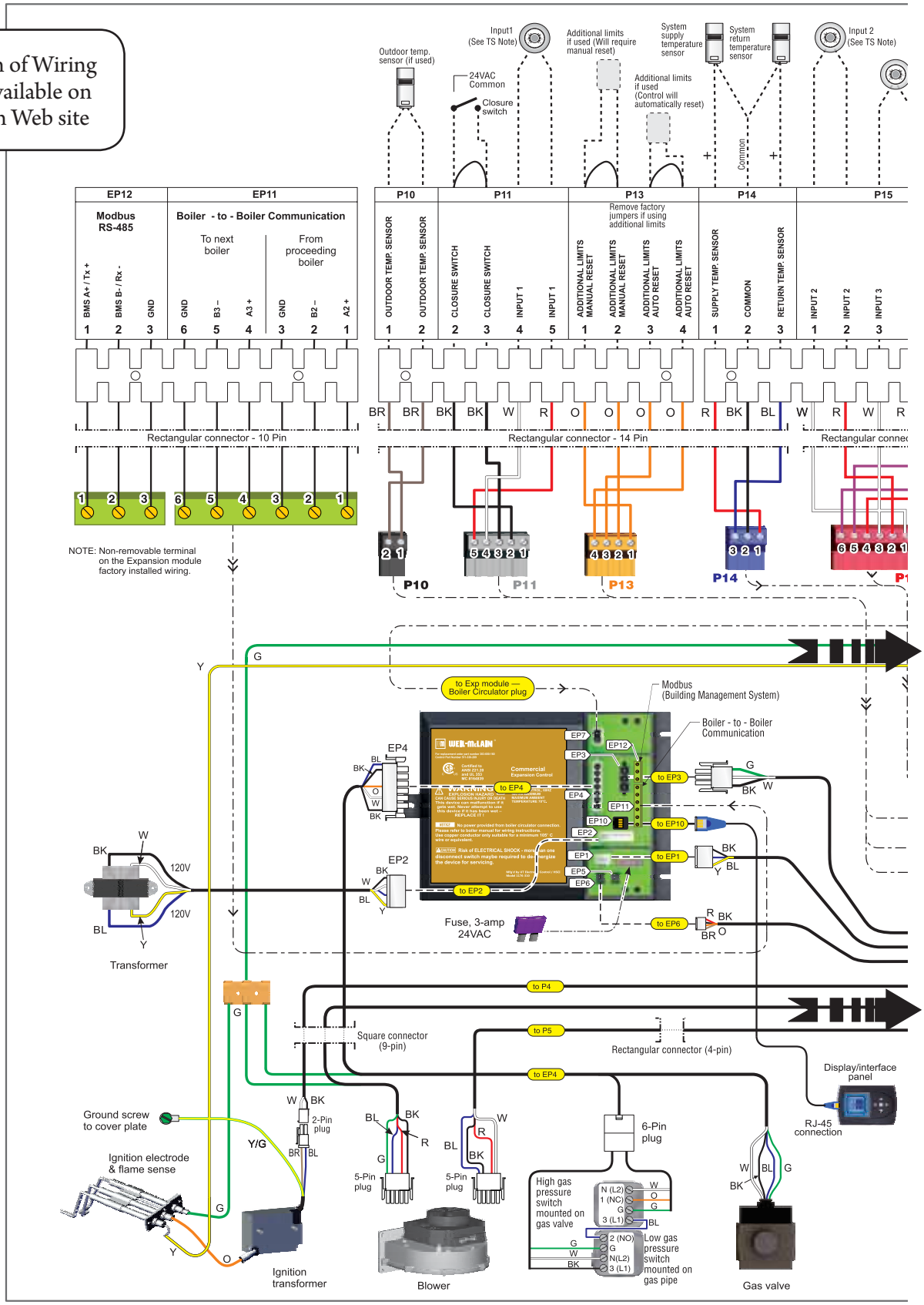

Field wiring Three Phase Schematic Diagram *(continued)*

Figure 56 Three Phase Schematic wiring diagram — ***SVF*™** boilers (continued on previous page)

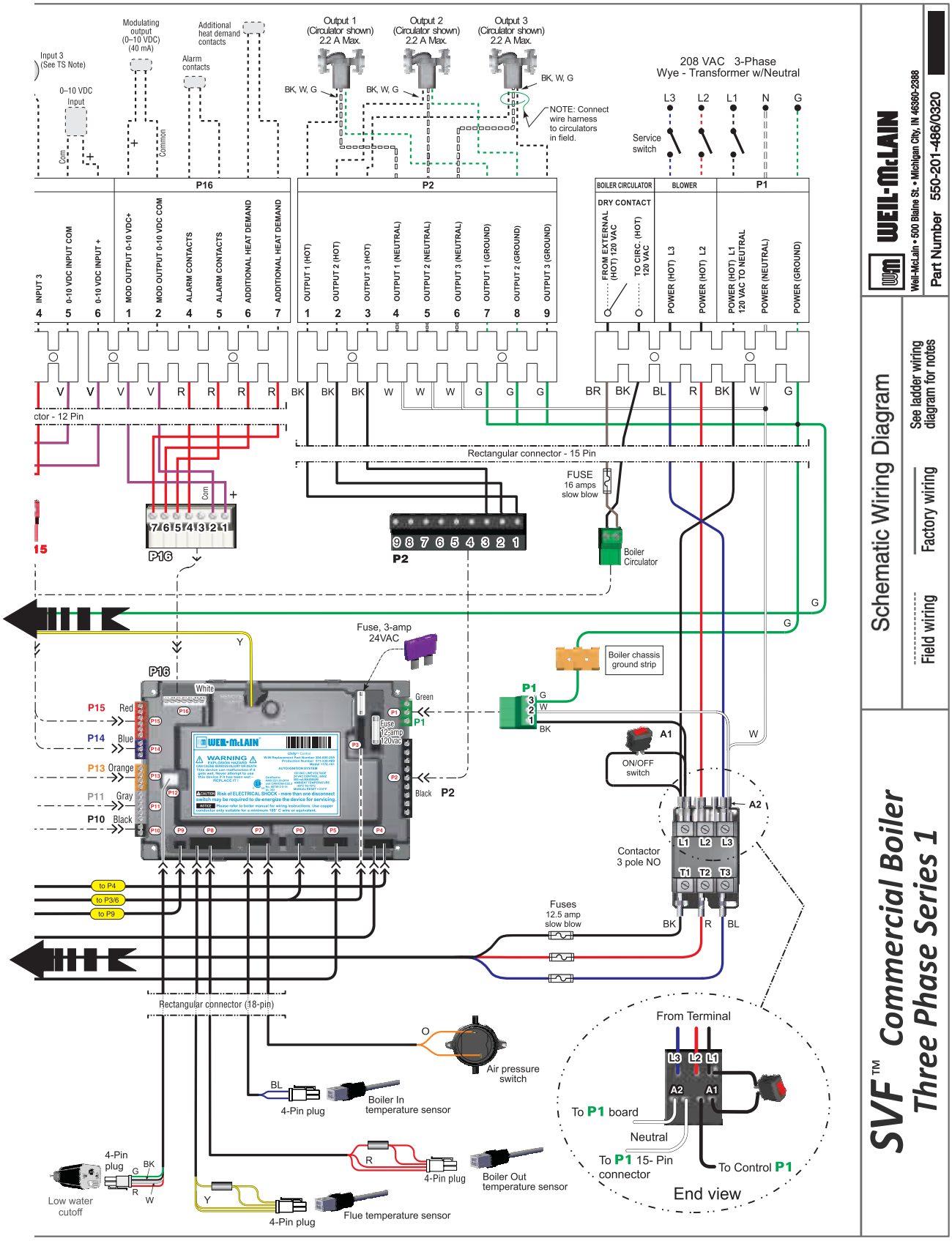

Field wiring Three Phase Ladder Diagram *(continued)*

Figure 57 Three Phase Ladder wiring diagram — ***SVF***™ boilers (continued on next page)

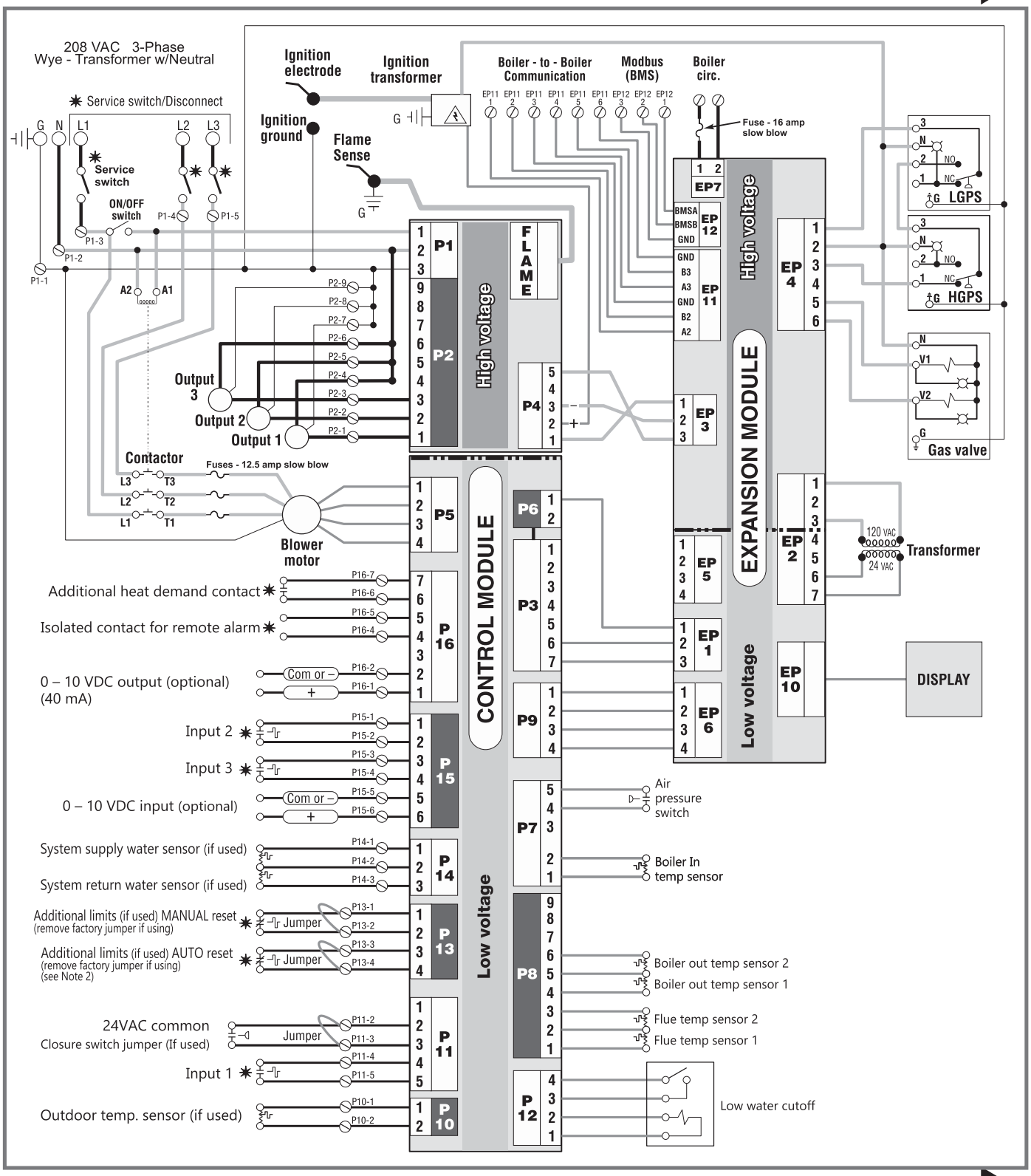

Field wiring Three Phase Ladder Diagram *(continued)*

Figure 58 Three Phase Ladder wiring diagram — ***SVF***™ boilers (continued on previous page)

SVF™ *Commercial Boiler Three Phase Series 1*
Ladder Wiring Diagram

⚠WARNING

Electrical shock hazard — can cause severe injury or death. Disconnect power before installing or servicing.

NOTICE

All contacts shown without power applied.

✷ Indicates items not provided

Legend for ladder wiring diagram only

- 120 vac field wiring
- Low voltage field wiring
- 120 vac factory wiring
- Low voltage factory wiring
- High voltage spark ignition wiring
- Ground connectors

Notes for Schematic and Ladder Diagrams

1. All wiring must be installed in accordance with:
   U.S.A. — N.E.C. And any other national, state, or local code requirements.
   Canada — C.S.A. C22.1 C.E.C. Part 1 and any other national, provincial, or local code requirements.
2. Connect additional limits (if used) between terminals P13-1 and P13-2 if the boiler control module is to manual reset on limit action. Connect between terminals P13-3 and P13-4 for automatic reset. Remove jumper across terminals used.
3. If any of the original wire as supplied with the appliance must be replaced, use minimum 105 °C wire or equivalent. Exceptions: Ignition lead wire must be obtained from Weil-McLain only.
4. Thermostat anticipator setting (single zone) — set anticipator for 0.1 amps.
5. For multiple zoning, use either zone valves or circulators. Refer to the component manufacturer's instructions and this manual for application and wiring suggestions. Boiler circulator must remain with boiler, and cannot be used for system circulation in any way.
6. Refer to control component instructions packed with the boiler for application information.
7. Provide power source to boiler that is protected by a surge protector. Amperage requirements for boilers are:

   SVF 2500/3000 — 16.22 amps on L1;
   6.90 amps on L2;
   6.90 amps on L3;

Fuse or breaker rating must be sized accordingly.

WEIL-McLAIN
Weil-McLain • 500 Blaine St. • Michigan City, IN 46360-2388

Part Number 550-201-487/0519

Field wiring (see Figure 51 - Figure 58) *(continued)*

A. Power Supply – REQUIRED

Terminal Block P1

1. Boiler line voltage power — Boiler loads are listed below. Provide and install a fused disconnect or service switch as required by applicable codes.
2. ***SVF*** 1500/2000 Connect properly sized **120VAC** power wiring to ***SVF***™ boiler line voltage terminal strip as shown at right.
3. ***SVF*** 2500/3000 Connect properly sized **208VAC** power wiring to ***SVF***™ boiler line voltage terminal strip as shown in Three Phase Wiring schematic, Figure 56, page 55.
4. If possible, provide a surge suppressor in the supply power line. This will reduce the possibilities of control damage due to line surges.
5. Must wire ground to this terminal to provide boiler grounding.

SVF 1500/2000 — 23.17 amps; Single Phase 120VAC

SVF 2500/3000 — 16.22 amps on L1; 6.90 amps on L2; 6.90 amps on L3; Three Phase 208VAC 3-Phase Wye- Transformer w/Neutral

NOTICE When all three (3) circulators outputs are used at 2.2 amps each.

Single Phase

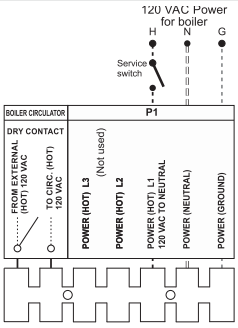

Three Phase

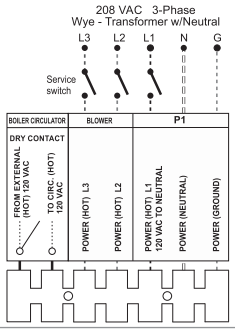

B. 120 VAC Outputs 1, 2 & 3 – *On each boiler – As needed for systems*

Terminal Strip P2

1. Output 1: P2 Terminals 1 (H), 4 (N), 7 (G).
2. Output 2: P2 Terminals 2 (H), 5 (N), 8 (G).
3. Output 3: P2 Terminals 3 (H), 6 (N), 9 (G).
4. Maximum load: 2.2 amps (use relay if circulator load is higher). See WARNING below.
5. Each boiler has three outputs (Output 1, Output 2, and Output 3) that provide 120 VAC to the following listed below.
   - A zone circulator.
   - A system circulator.
   - A DHW circulator (used to circulate through an indirect tank).
   - An auxiliary item that must be energized during an input call, such as an air damper.
6. When using inputs/outputs for heat/DHW demands, each input (Input 1, Input 2, and Input 3) controls its respective 120VAC output (Output 1, Output 2, and Output 3). Outputs are energized only when BOTH conditions below are met:
   a. The corresponding input indicates a call for heat/DHW (i.e., contact closure).
   b. The PRIORITY assigned to the Input/Output pair is ACTIVE (i.e., the zone may be calling but the pump won't activate unless the boiler is currently running on that system/priority).
7. When using the inputs/outputs for the AUX PUMP/OUTPUT function, the output is controlled by selectable conditions set up in the control.
   a. Use the AUX PUMP/OUTPUT function for devices such as system pumps, combustion air dampers, and other auxiliary equipment to activate when the boiler is on/running.
   b. See page 77 and page 78 for more information on the setup and selection of operating conditions.

NOTICE **For Priority DHW Application:**
The DHW aquastat can be connected to any one of the three input/output pairs. The selected input should be assigned to PRIORITY 1 during the WIZARD setup or manually in the ASSIGN INPUTS menu.

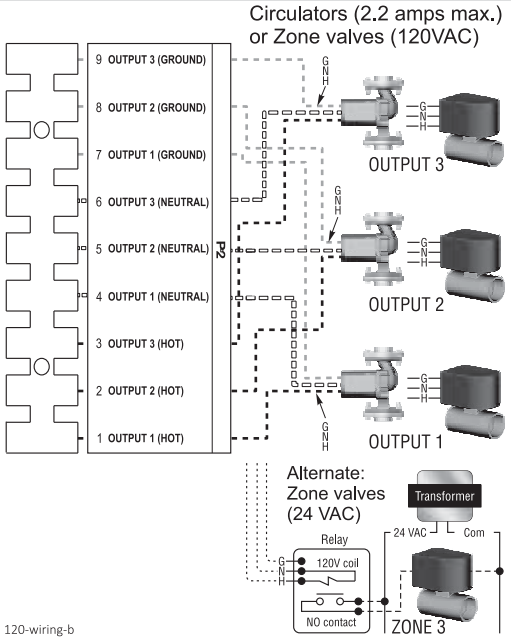

See Figure 51, page 50 for details.

⚠WARNING **Output circuits are 120 VAC. If an output is to operate a low voltage circuit or must be an isolated contact, use an isolation relay. See example above for 24 VAC zone valves.**

⚠WARNING **CIRCULATOR POWER — The maximum allowable current for each powered circuit output is 2.2 amps at 120VAC.**

For circulators with higher amp ratings, install a circulator relay or starter. Connect only the 120VAC coil to the ***SVF***™ circulator terminals.

Field wiring (see Figure 51 - Figure 58) *(continued)*

C. 120 VAC to Boiler Circulator – *REQUIRED*

Terminal Strip EP7 (BOILER CIRC) *(Expansion module, top right)*

1. Provides 120VAC Dry Contact for boiler circulator.
2. Terminals are: 1 (H), 2 (H).
3. Maximum load: 10 amps (use relay if circulator load is higher).
4. Provide and install a fused disconnect or service switch (15-ampere rated recommended) as required by applicable codes for circulator with maximum load of 10 amps.
5. The boiler circulator is used in the boiler loop of the primary / secondary piping. Primary / secondary piping is recommended to be used with the ***SVF***™ boiler to ensure proper flow through the heat exchanger.

NOTICE Other designed piping arrangements will work as long as water flow requirements are met from page 15, contact your local Weil-McLain commercial representative for assistance.

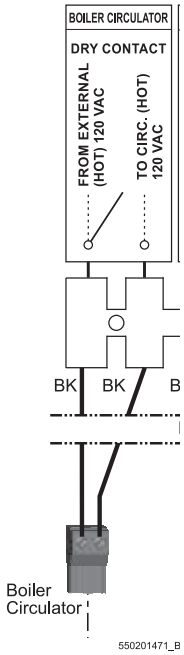

See Figure 51, page 50 for details.

D. 24 VAC Inputs 1, 2 and 3 (tstats, end switches, etc.) – *As needed for systems*

Terminal Strip P11 (input 1) & Terminal Strip P15 (inputs 2 & 3)

1. Input 1 – Terminal Strip P11 – 4 & 5 (***SVF*** terminal bus).
2. Input 2 – Terminal Strip P15 – 1 & 2 (***SVF*** terminal bus).
3. Input 3 – Terminal Strip P15 – 3 & 4 (***SVF*** terminal bus).
4. These three inputs on each boiler can indicate a call for heat to the control by means of a dry contact closure (thermostat, aquastat, or switch). (See right and Figure 51, page 50).
5. The control provides inputs for up to three zones or three systems (priorities).

NOTICE The control default setting is for three space heating zones tied to PRIORITY 2, which is defaulted to FINNED TUBE BASEBOARD system type.

6. For DHW applications, the aquastat can be connected to one of the three input/output pairs. Take advantage of factory default settings by using PRIORITY 1 for the DHW system. The default control setting for PRIORITY 1 is a direct-piped DHW system type.
7. The default control setting uses each input (INPUT 1, INPUT 2, and INPUT 3) to control its respective 120VAC output (OUTPUT 1, OUTPUT 2, and OUTPUT 3).

NOTICE Use of 0–10VDC input for modulation disables Input 1 from creating calls for heat. See page 64 for instructions.
An input can be assigned to an AUX PUMP/OUTPUT function to operate a system pump or interlock with a combustion air damper. Inputs assigned for this function cannot be used for heat demand operation. See page 77 and page 78 for more information on the setup and selection of operating conditions.

TT or end switch inputs

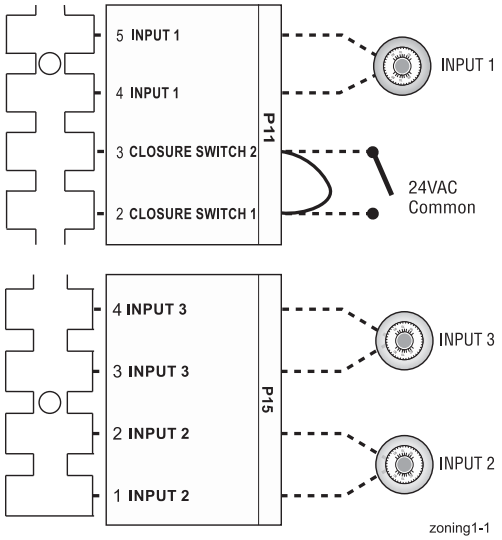

See Figure 51, page 50 for details

WARNING **Thermostats** — **DO NOT** supply 24-volt power to the thermostat circuits (Input1, Input2 and Input3 in Figure 51, page 50) or attempt to supply 24 volts for any other application.
For thermostats that require a continuous 24-volt power source, connect the common wire ("C") to **P11** Pin 2 (see Figure 51, page 50). Do NOT exceed 160mA draw per thermostat.

Zone valves — If using 3-wire zone valves, use relays to provide dry contacts to the Control thermostat connections. The zone valve end switches of 3-wire valves carry 24VAC from the valve.

Thermostat anticipator setting — 0.1 amps.

Field wiring (see Figure 28 - Figure 58) *(continued)*

E. System supply and return temperature sensors – *REQUIRED*

Terminal Block P14 #1 & #2

1. Two (2) immersion temperature sensors are shipped with each boiler. Install one to the system supply piping and the other to the system return piping. See ***SVF***™ boiler manual replacement parts section for available replacement immersion sensors or strap on sensors.
2. Locate the supply sensor at least six pipe diameters, but no further than 3 feet, downstream from the boiler connection to the main to ensure adequate mixing.
3. Supply sensor – wire between P14 #1 and #2 (common).
4. Return sensor – wire between P14 #3 and #2 (common).
5. Thermostat wire can be used to connect these sensors.
6. The Control compares the system return temperature with the system supply temperature. Should the return temperature ever exceed the supply temperature, the Control knows there is likely a sensor failure and will report this problem on the display.

NOTICE All heating systems shown in this manual require the System Supply and Return sensors to be installed for proper control function. System will not properly provide heat if sensors are not installed according to these instructions.

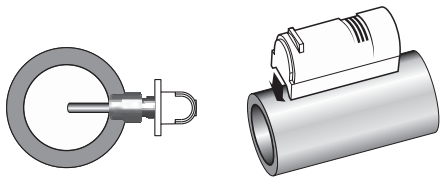

1/2" NPT -4" long Immersion sensors standard. Optional strap on sensors available in Replacement Part section.

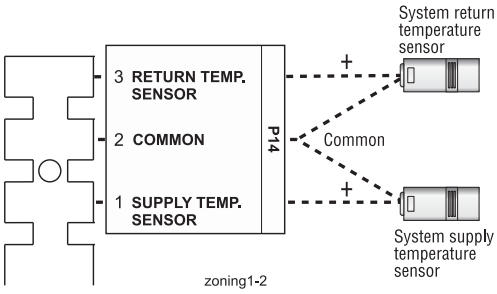

See Figure 51, page 50 for details.

F. *Outdoor temperature sensor – OPTIONAL*

Terminal Block P10 #1 & #2

1. The control provides programmable options if using an outdoor temperature sensor. This sensor is supplied with the boiler.
2. Mount the outdoor sensor on an exterior wall, shielded from direct sunlight or flow of heat or cooling from other sources.
3. The wire outlet on the sensor must be oriented DOWN to prevent water entry.
4. Connect the sensor leads to the terminal shown at right and in the wiring diagrams (see Figure 51, page 50). Thermostat wire can be used to connect the sensor.

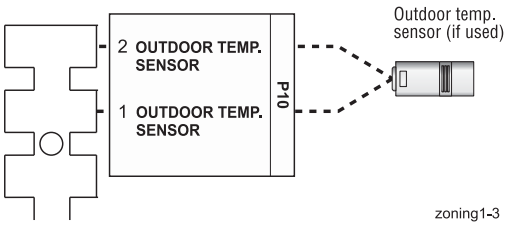

See Figure 51, page 50 for details.

Field wiring (see Figure 51 - Figure 58) *(continued)*

G. External limits – OPTIONAL

To cause **MANUAL** reset: Terminal Block P13 #1 & #2

Unity™ control will require manual reset after circuit is interrupted

1. Remove factory-installed jumper and connect isolated contacts of external limits across P13 pins 1 and 2 to cause the control to enter manual reset lockout if the limit circuit opens. The limit must close and the control must be manually reset using the procedure given in this manual. See drawing at right and wiring diagram (Figure 51, page 50).

NOTICE The control will lockout when a limit in its manual reset circuit opens (P13 pins 1 & 2). The control activates its alarm terminals and shuts the boiler off. An operator (user or technician) must manually reset the control to resume heating. Cycling power on and off will NOT reset the control.

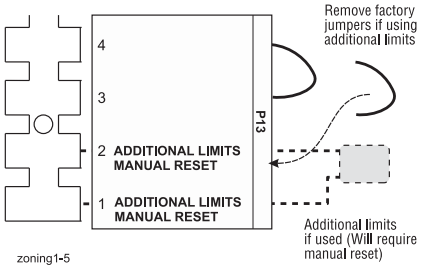

See Figure 51, page 50 for details

To cause **AUTOMATIC** reset: Terminal Block P13 #3 & #4

Unity™ control will reset automatically after circuit is interrupted

1. Remove factory-installed jumper and connect isolated contacts of external limits across P13 pins 3 and 4 to cause the control to shut down the burner on limit opening, then automatically restart 150 seconds after the limit closes.
2. See drawing at right and wiring diagram (Figure 51, page 50).

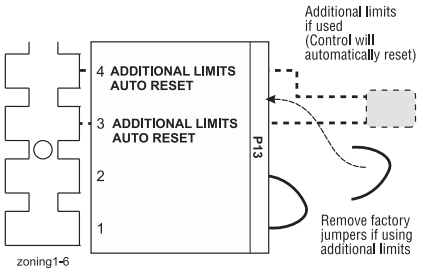

See Figure 51, page 50 for details.

H. Alarm contacts – OPTIONAL

Terminal Block P16 #4 & #5

1. The control's alarm dry contact (P16, terminals 4 and 5) closes when the boiler enters manual lockout only.
2. Connect these terminals for remote alarm notification.
3. Contact electrical ratings: 24VAC or less; 0.5 amp or less.

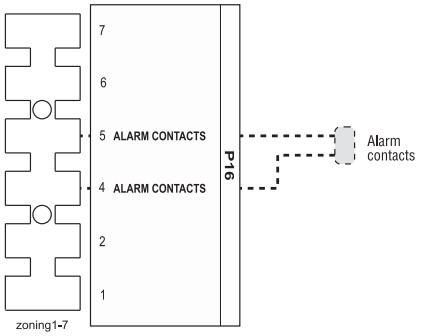

See Figure 51, page 50 for details.

Field wiring (see Figure 51 - Figure 58) *(continued)*

I. Closure switch (flow switch and/or CAD) – OPTIONAL

Jumper on Terminal Strip P11

1. A flow switch or combustion air damper (CAD) interlock can be configured by removing jumper.
2. No control settings are required when using a flow switch.
3. Recommended configuration of the ***Unity***™ control for a CAD interlock:
   a. Assign **INPUT 3** as a **AUX PUMP/ OUTPUT** function.
   b. For the **AUX PUMP/OUTPUT** operating mode, select **Damper Control**. This ensures the damper will be activated any time the boiler is called on to fire.
   c. **OUTPUT 3** will provide 120VAC to the damper motor. Use an isolation relay if damper motor requires another voltage or more than 2.2 amp if using 120VAC.

NOTICE * The devices used must provide electrically isolated contacts, because the P11 jumper circuit carries 24VAC.

4. When a call for heat occurs, the corresponding output(s) energize, and the blower does not activate until the closure switch is made. The boiler is given four (4) minutes to make the closure switch. If the switch opens prior to ignition, the timer continues with the blower remaining active. After four (4) minutes, if the closure switch is not made, or if the closure switch opens during burner firing, the control locks out. The fault will clear when the closure switch makes. The corresponding output(s) will remain energized in an attempt to close the switch.

Flow switch and/or combustion air damper

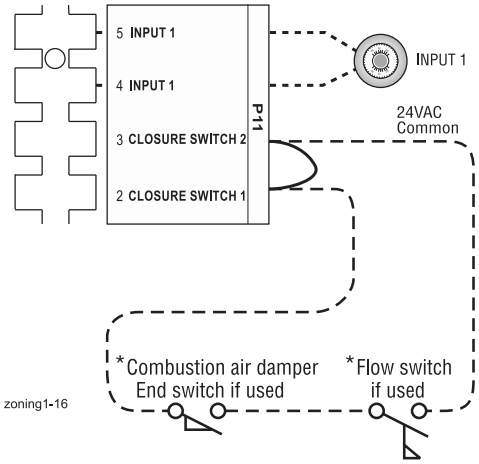

See Figure 51, page 50 for details

J. Closure switch (flow switch and/or CAD) – with shared end switch – OPTIONAL

1. A flow switch or combustion air damper (CAD) interlock can be configured by removing jumper.
2. No control settings are required when using a flow switch.
3. Recommended configuration of the ***Unity***™ control for a CAD interlock installed on individual boiler.
   a. Assign **INPUT 3** as a **AUX PUMP/ OUTPUT** function.
   b. For the **AUX PUMP/OUTPUT** operating mode, select **Damper Control**. This ensures the damper will be activated any time the boiler is called on to fire.
   c. **OUTPUT 3** will provide 120VAC to the damper motor. Use an isolation relay if damper motor requires another voltage or more than 2.2 amp if using 120VAC.

NOTICE * The devices used must provide electrically isolated contacts, because the P11 jumper circuit carries 24VAC.

4. Recommended configuration of the ***Unity***™ control for a shared end switch device:
   a. Assign **INPUT 2** as a **AUX PUMP/ OUTPUT** function on the boiler with the end switch.
   b. For the **AUX PUMP/OUTPUT** operating mode, select **ANY Burner Demand**. This ensures the end switch will be activated any time any burner is called on to fire. See other **AUX PUMP/ OUTPUT** options in Figure 70, page 78.
   c. **OUTPUT 2** will provide 120VAC to the shared device. Use an isolation relay if shared device requires another voltage or more than 2.2 amp if using 120VAC.
5. When a call for heat occurs, the corresponding output(s) energize, and the blower does not activate until the closure switch is made. The boiler is given four (4) minutes to make the closure switch. If the switch opens prior to ignition, the timer continues with the blower remaining active. After four (4) minutes, if the closure switch is not made, or if the closure switch opens during burner firing, the control locks out. The fault will clear when the closure switch makes The corresponding output(s) will remain energized in an attempt to close the switch.

NOTICE * The devices used must provide electrically isolated contacts, because the P11 jumper circuit carries 24VAC.

- Shared devices could be a louvered wall or other shared device that end switch verification is required.

Shared End Switch

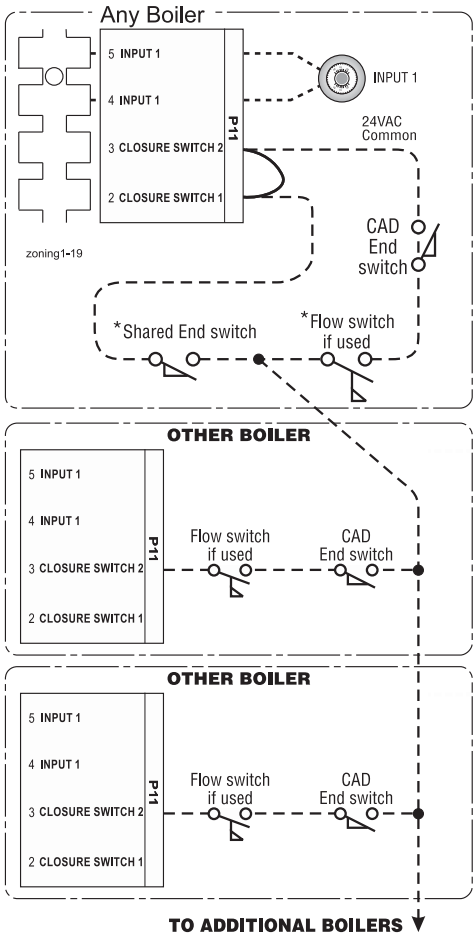

Field wiring (see Figure 51 - Figure 58) *(continued)*

K. 0 –10 VDC Remote TARGET input – OPTIONAL

Terminal Block P15 #5 & #6

1. See illustration at right and Figure 51, page 50 (wiring diagram) for details.
2. Remote target using 0–10VDC input requires a 0–10VDC input signal at P15-5/6 as shown at right.
   a. The input positive connection must be at P15 terminal 6 and the common connection at terminal 5.
3. This illustration also shows how to connect TT or end switch contacts at INPUT 1, INPUT 2 and INPUT 3.
   a. If a Heat/DHW demand is required, connect the demand's dry contact to an unused input on the control and its pump/valve to the respective output. Then assign and setup a priority to the input using the Wizard or manually through the contractor menu.
   b. A dry contact heat demand must be applied to one of the inputs in order to initiate a call for heat.
4. The 0–10VDC signal is used to adjust the supply target temperature, using the TARGET ADJUST setting. Set TARGET ADJUST during the WIZARD or manually in the PRIORITY SETTINGS menu for the desired PRIORITY.
   a. Many options are available for configuring the control. The following is a suggested setup that uses factory default settings as much as possible.
   b. Use PRIORITY 1 for the DHW heating system when used. This priority's default values are set for DHW, direct-piped to the boiler. Verify that settings are suitable for the application, change if needed.
   c. Use PRIORITY 2 for the heating systems.
      - For single boilers, the factory default settings for PRIORITY 2 make this priority a good choice for space heating applications. Set PRIORITY 2 values to the following:
      - Set TARGET ADJUST value to 0–10V.
      - Set VOLTS FOR MAX at the voltage that will call for the highest target temperature. Set SUPPLY MAX at this temperature.
      - Set VOLTS FOR MIN at the voltage that will call for the lowest target temperature. Set SUPPLY MIN at this temperature.
      - For voltages between VOLTS FOR MAX and VOLTS FOR MIN, the target temperature will range proportionately between SUPPLY MAX and SUPPLY MIN. See the ***SVF***™ Advanced Manual for a full discussion.

NOTE: The 0–10VDC signal replaces the ODT sensor as the target temperature modifier (TARGET ADJUST setting). The control does not decide target temperature. It now interpolates the target temperature based upon incoming voltage and the priority settings.

TT or end switch inputs
(INPUTS 1, 2, and 3)
With External 0–10VDC input

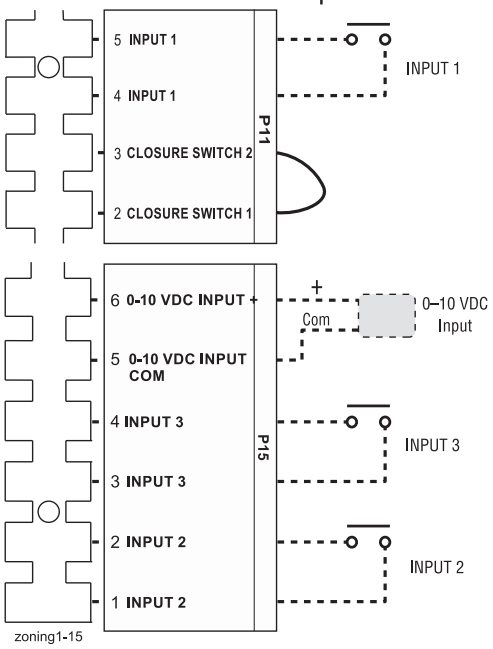

See Figure 51, page 50 for details.

Field wiring (see Figure 51 - Figure 58) *(continued)*

L. 0–10 VDC Remote MODULATION input – OPTIONAL

Terminal Block P15 #5 & #6 *(Unity™ control module, left side)*

WARNING **Using an external multiple boiler controller** — Remote modulation using an external controller only works with each boiler set up as a SINGLE boiler in the ***Unity***™ Control setup.

1. See illustration at right and Figure 51, page 50 for details.
2. This illustration also shows how to connect TT or end switch contacts at INPUT 2 and INPUT 3 for other uses.
3. This function can only be used with a single boiler, NOT for a boiler in a network.
4. Note that using 0–10VDC input replaces INPUT 1 to generate a heat demand as shown at right.
5. Remote modulation requires a 0–10VDC input signal at P15-4/5 as shown at right.
   a. The 0–10VDC input positive connection must be at terminal 6 and common connection at terminal 5.
6. Control setup:
   a. Many options are available for configuring the control. The following is a suggested setup that uses factory default settings as much as possible.
   b. If DHW is required, use PRIORITY 1 to minimize setup steps.
      - Connect the DHW aquastat to INPUT 2 or INPUT 3 and assign the input used to PRIORITY 1.
      - Verify that control settings are suitable for the application, changing if necessary.
   c. Use PRIORITY 2 for the system to be remote modulated.
      - The factory default settings for this priority are best suited for space heating.
      - Assign INPUT 1 to the priority chosen. Accept all defaults for INPUT 1 — no changes should be necessary during the WIZARD.
      - After the WIZARD has been completed, go to the ASSIGN INPUTS menu for INPUT 1. Change SOURCE to 0–10V (default setting is TT1). See page 77 for ASSIGN INPUTS menu information.
7. Operation:
   a. A heat demand is activated at 0.9VDC and turns off at 0.8VDC.
      2 VDC = 10% input.
      10 VDC = 100% input.
      These voltage settings are not adjustable.
   b. OUTPUT 1 (120VAC) is activated and deactivated as the heat demand is turned on and off. This output is a good choice to operate the system pump.
8. NOTE: The ***Unity***™ control can be configured to use either 0–10VDC for target operation (see previous section) or modulation, **but not both**.

TT or end switch inputs (INPUTS 2 and 3)
With External 0–10VDC input

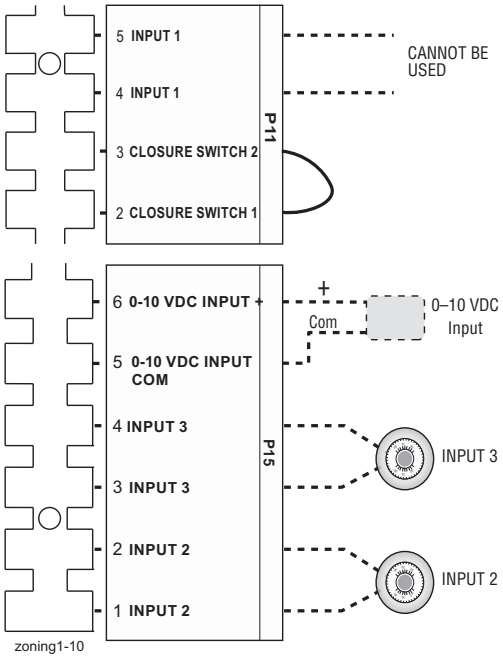

See Figure 51, page 50 for details.

Field wiring (see Figure 51 - Figure 58) *(continued)*

M. Multiple Boiler and BMS Connections – see ADVANCED Manual

Terminal Strips EP11 and EP12 on Expansion Module *(Expansion module, right side)*

1. The boiler control is capable of multiple boiler communication and control of up to eight (8) boilers in one installation.
2. The boiler control is also capable of BMS communication.
3. See ***SVF***™ Advanced Manual for multiple boiler installation and setup information.

See ***SVF***™ Advanced Manual for details.

N. Additional heat demand contacts – OPTIONAL

Terminal Block P16 Pins #6 & #7 *(**Unity**™ control module, top left)*

1. The control module can be set to activate another heat source using its additional heat demand dry contacts through terminal block P16 pins 6 & 7.
2. Connect these terminals to call for heat from the other heat source.
3. Contact electrical ratings: 24VAC or less; 0.5 amp or less.
4. Set the control to activate the heat demand contacts as needed.
5. See ***SVF***™ Advanced Manual to configure.

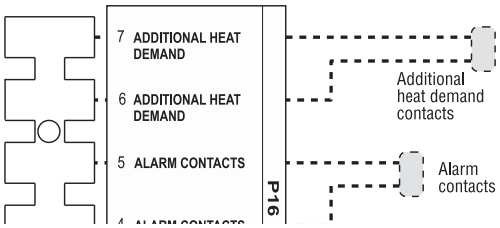

See Figure 51, page 50 for details

O. 0-10 VDC Output Section

Terminal Block P16 Pins #1 & #2 *(**Unity**™ control module, top left)*

1. The control module can be set to activate another heat source using its 0-10VDC Output through terminal block P16 pins 1 & 2.
2. Connect these terminals to 0-10VDC inputs on another heat source to control its modulation rate.
3. Maximum electrical ratings: 10VDC; 108µ A.
4. Set the control to activate the output as needed.
5. See ***SVF***™ Advanced Manual to configure.

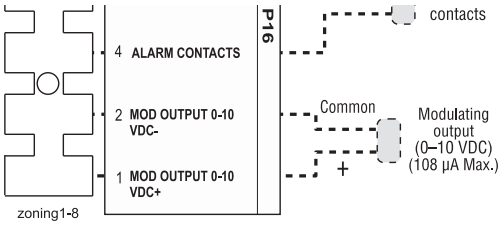

See Figure 51, page 50 for details.

Zoning with the *Unity*™ Control

A. Zoning with CIRCULATORS, suggested applications

Three space heating zones (no DHW)

1. Review wiring information on page 49 (120VAC outputs) and page 59 (24VAC inputs).
2. The configuration at right uses the three input/output pairs to receive thermostat inputs on P11-4/5, P15-1/2, and P15-3/4; and circulator outputs on P2 as shown.
3. The factory default settings assign all inputs 1, 2 and 3 to PRIORITY 2.
4. Choose the space heating system type that matches the heating system during the WIZARD setup or manually in the PRIORITY 2 menu.
5. Use the factory default settings for the system type chosen, or change if needed.
6. Factory defaults should work for other settings not listed above.

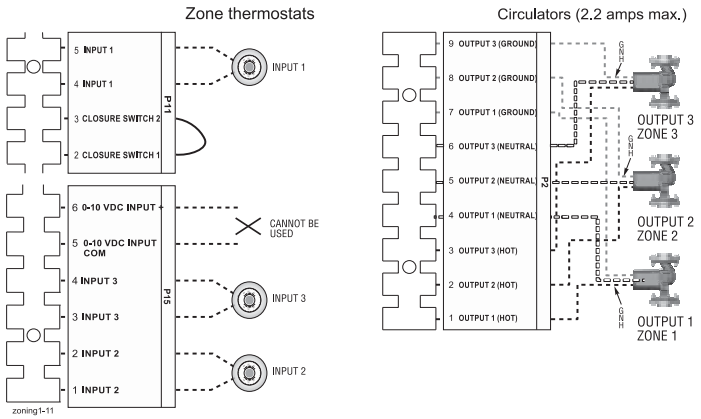

Two space heating zones plus DHW piped directly to boiler

1. Review wiring information on page 49 (120VAC outputs) and page 59 (24VAC inputs).
2. The configuration at right uses INPUT 2 and 3 for space heating thermostats. INPUT 1 uses the input from a DHW aquastat.
3. The factory default settings assign inputs 1, 2 and 3 to PRIORITY 2. Keep inputs 2 and 3 assigned to PRIORITY 2. To set up PRIORITY 2, choose the space heating system type that matches the heating system during the WIZARD setup or manually in the PRIORITY 2 menu.
4. Assign INPUT 1 to PRIORITY 1, which is factory default configured for DHW applications.
5. Use the factory default settings for DHW and for the heating system type chosen, or change if needed.
6. Factory defaults should work for other settings not listed above.

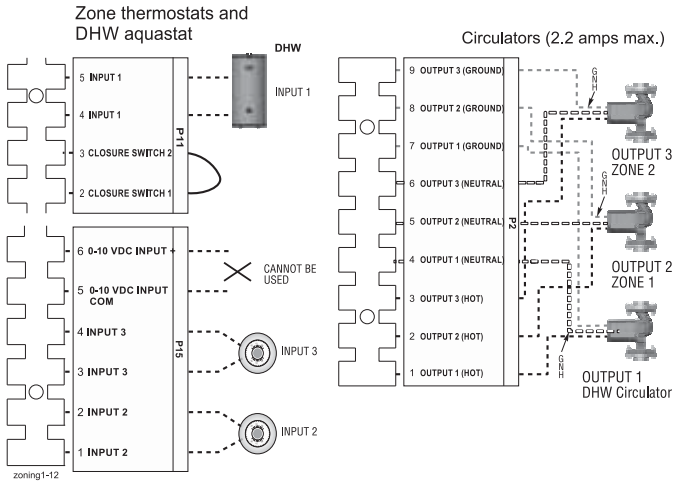

WMCR circulator zone controller plus DHW controlled by boiler, DHW piped directly to boiler

1. Review wiring information on page 49 (120VAC outputs) and page 59 (24VAC inputs).
2. To shut down Space Heating during DHW operation: Provide and connect relay R1 (120VAC coil with NC contact) to interrupt the Zone controller's ZC-ZR (120VAC operating circuit).
3. The configuration at right uses INPUT 2 for space heating with the call for heat coming from the zone controller (X-X). INPUT 1 uses the input from a DHW aquastat.
4. The factory default settings assign inputs 1, 2 and 3 to PRIORITY 2. Keep input 2 assigned to PRIORITY 2. To set up PRIORITY 2, choose the space heating system type that matches the heating system during the WIZARD setup or manually in the PRIORITY 2 menu.
5. Assign INPUT 1 to PRIORITY 1, which is factory default configured for DHW applications. Wire the DHW circulator to OUTPUT 1.
6. Use the factory default settings for DHW and for the heating system type chosen, or change if needed. Factory defaults should work for other settings not listed above.

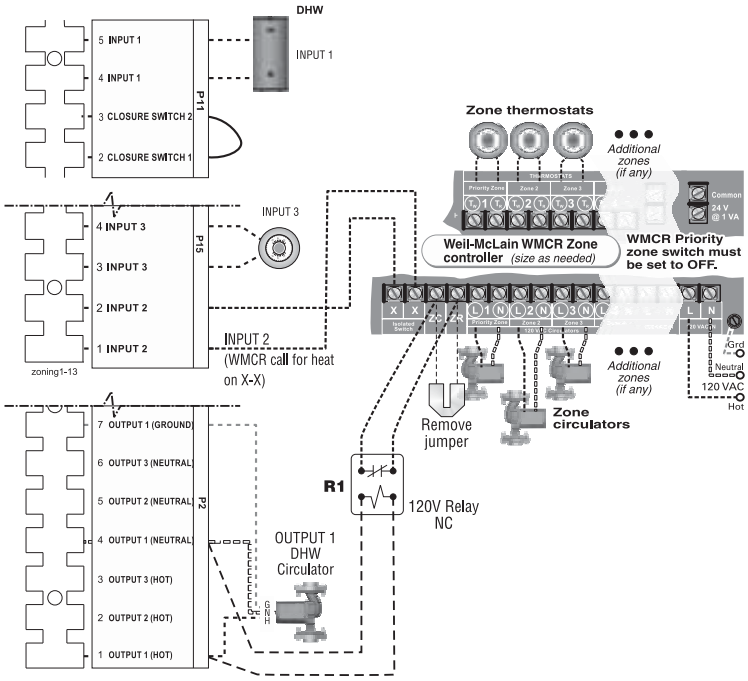

P15, P11 and P2 are on the terminal strip

Zoning with the *Unity*™ Control *(continued)*

B. Zoning with ZONE VALVES, suggested applications

Two space heating zones (no DHW)

1. Review wiring information on page 49 (120VAC outputs) and page 59 (24VAC inputs).
2. The configuration at right uses INPUT 2 and 3 for space heating thermostats. INPUT 1 is reserved here for configuring the operation of the system circulator.
3. The factory default settings assign inputs 1, 2 and 3 to PRIORITY 2. Keep inputs 2 and 3 assigned to PRIORITY 2. To set up PRIORITY 2, choose the space heating system type that matches the heating system during the WIZARD setup or manually in the PRIORITY 2 menu.
4. Use the factory default settings for the heating system type chosen, or change if needed.
5. Assign INPUT 1 to AUX PUMP/OUTPUT. Then select ANY INPUT BY ITS PRIORITY when prompted for when to activate the output. This will cause the system pump to run when either of the zones calls for heat. Confirm that Priority 2 RUN AUX PUMP/OUT is set to YES.
6. INPUT 1 (P11-4/5) cannot be used for a wired connection (as shown at right) because it is being used in the control setup to run the system circulator.
7. Factory defaults should work for other settings not listed above.

⚠WARNING The system must be equipped with a by-pass pressure regulating valve. Flow can occur with zone valves closed.

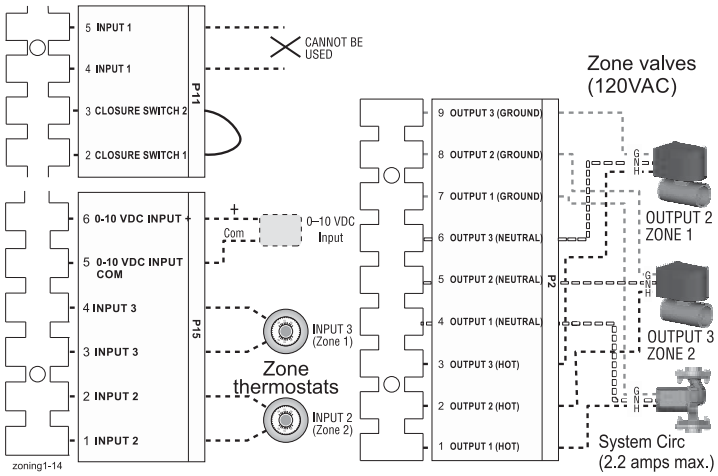

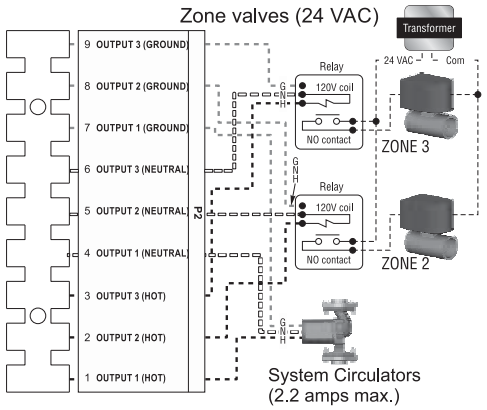

WMZV zone valve zone controller plus DHW controlled by boiler, DHW piped directly to boiler

1. Review wiring information on page 49 (120VAC outputs) and page 59 (24VAC inputs).
2. The configuration at right uses INPUT 2 for space heating with the call for heat coming from the zone controller (X-X). INPUT 1 uses the input from a DHW aquastat.
3. The factory default settings assign inputs 1, 2 and 3 to PRIORITY 2. Keep input 2 assigned to PRIORITY 2. To set up PRIORITY 2, choose the space heating system type that matches the heating system during the WIZARD setup or manually in the PRIORITY 2 menu.
4. The system circulator, wired to OUTPUT 2, will turn on whenever there is a call for heat from the zone controller.
5. Assign INPUT 1 to PRIORITY 1, which is factory default configured for DHW applications. Wire the DHW circulator to OUTPUT 1.
6. Use the factory default settings for DHW and for the heating system type chosen, or change if needed. Factory defaults should work for other settings not listed above.

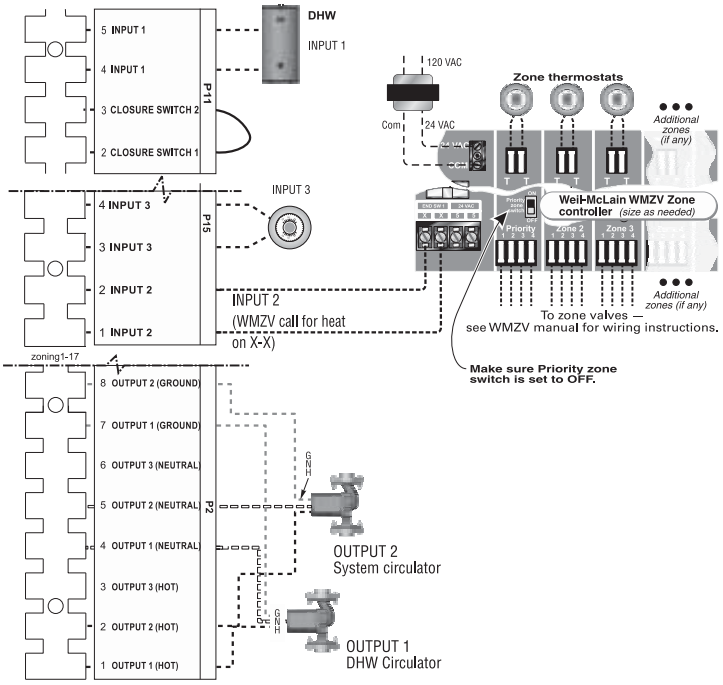

P15, P11 and P2 are on the terminal strips

Control operation and setup

Control setup

1. Set control parameters using the WIZARD option provided on initial start-up or manually enter parameters using control menus (see Figure 66, page 74 and following pages for information.)
2. See instructions beginning on page 69 for basic systems and minimum settings required (using factory defaults).
3. This manual provides set-up information for a single boiler using BASIC control setting options. See the ***SVF***™ Advanced Manual for single-boiler advanced settings and for all multiple boiler applications.

⚠WARNING

Boiler Model, Altitude are critical settings. Failure to set correctly could result in severe personal injury, death or substantial property damage.

Temperature settings — You must ensure that the Control is set for the proper water temperatures for the system. Excessive water temperature can cause significant property damage in some applications.

Multi-temperature systems — If the heating system includes circuits that require lower temperature water (radiant slab circuits, for example) as well as higher temperature circuits (DHW, finned tube baseboard, etc.), it is recommended to protect low-temperature circuits with limit controls that are wired to an Control external limit circuit. Failure to provide regulation can result in substantial property damage.

Control features

- ❑ Single or multiple boiler control (with lead boiler rotation).
- ❑ Graphic and robust text display for ease of operation monitoring and troubleshooting.
- ❑ Three programmable priority assignments for up to three heat inputs.
- ❑ Preset operating parameters for typical heating systems, including target temperatures, reset curves and circulator assignments.
- ❑ Integral outdoor reset option, with reset curves matched to the system type selected.
- ❑ ModBus communications for external communication and monitoring.
- ❑ 0-10VDC input modulation or remote target input.
- ❑ Four pump outputs, 3 – powered, 1– dry contact.
- ❑ Additional heat demand operation to call a second heat source to help supply the energy required for heating.
- ❑ Advanced PI response to anticipate system needs.
- ❑ Flue temperature modifier to target temperature.
- ❑ Modulation based on flue sensor and boiler/system supply/return sensors.
- ❑ Dual temperature sensors on boiler outlet and flue, providing redundant protection.
- ❑ Boiler is shipped with an outdoor and immersion sensor on system supply and return sensors.
- ❑ Blower speed modulation to control boiler firing rate.
- ❑ Alarm relay on error/fault for use with an audible safety.
- ❑ CSD-1 Valve seat leakage test feature (See Advanced Manual).
- ❑ Built-in 0–10 VDC signal generator to allow parallel modulation of multiple boilers; also capable of accepting 0–10 VDC input.
- ❑ The boiler is equipped with a low water cutoff, factory wired to the Control, manually reset through the Control.

Sequence of operation

1. Figure 59 is a summary of the operating sequence for the Control.
   - The statuses shown appear in the display as the Control cycles the boiler. See Figure 63, page 72 for screen shots.
   - The display will flash red if a problem has been detected.

Figure 59 Control sequence of operation

Display status text	Control action *(Also see Figure 63, page 72)*
POWER UP	• Check the boiler model listed on the power-up screen. If it is not correct, turn off the boiler. See page 75 for instructions to change setting. • When power is turned on, the screen lists sensors that are detected. If any sensor is not listed, make sure it is connected correctly. Turn off power and restart.
Standby	• Standby - no calls for heat. • Toggles through no dots, 1 dot, 2 dots, then 3 dots while in standby (wrench symbol will show instead if maintenance is needed).
Blower ON	• Call for heat detected. • Display on with BLUE light (space heating) or PURPLE light (DHW). • Start min/max timers if more than one system is calling - highest priority starts first. • Start circulators for this priority setup based upon settings. • Calculate target temp — If sensor temp is below target temp, begin firing sequence. • Wait on closure switch. • Blower to purge speed for prepurge. • Min air flow switch. • Pre-purge.
Ignition	• After prepurge times out, transition to ignition speed. • Begin ignition cycle. • Activate gas valve and ignition spark. • Continue ignition spark for ignition period. • Turn off spark and use flame rod to check for flame signal.
Space Heating	• Flame detected. • Release boiler to modulation. • NOTE: If flame is not detected, the gas valve is turned off, blower turns on (postpurge), and control starts cycle again. If permitted, SVF 3000 only has 1 ignition attempt per ASME CSD-1. • If priority timer times out, switch to next priority and start priority timer. • If demand satisfied, go to postpurge.
DHW Heating	• Flame detected. • Release boiler to modulation. • NOTE: If flame is not detected, the gas valve is turned off, blower turns on (postpurge), and control starts cycle again. If permitted, SVF 3000 only has 1 ignition attempt per ASME CSD-1. • If priority timer times out, switch to next priority and start priority timer. • If demand satisfied, go to postpurge.
Blower OFF	• Demand satisfied (temperature reaches target temperature or limit setting). • Gas valve off. • Blower to ignition speed for postpurge. • Return to standby after purge.
Maintenance	• Display turns BLUE, toggling between graphic screen and maintenance screen (occurs if maintenance schedule timer times out). • Will show during standby only. • Boiler operates as normal.
Error/fault	• Display turns RED due to error or limit event. • Flashing display means lockout condition.
WWSD	• Warm weather shut down - the boiler will not be allowed to fire on space heating if the outside temperature is greater than the WWSD setting. • DHW operation is not affected by WWSD.

Control operation and setup *(continued)*

Control Priorities & Input/Outputs

- For heating installations with multiple systems, the Control uses PRIORITIES to determine the order of operation of the systems. The control's MAX and MIN time settings determine the maximum and minimum times a system will be operated before being turned off to allow another system to operate. A typical example is DHW priority — heat demand from the DHW system is given preference over space heating, if set to use Priority 1.
- Each PRIORITY has its own set of operating parameters. The control prompts the user to select the system type (finned tube baseboard, DHW, etc.) and is factory programmed with parameters suited to each of these system types. The user can also choose CUSTOM to create a system type.
- The Control provides up to three priorities for single boiler applications and up to four priorities for network boiler applications. The order of operation is: PRIORITY 1, PRIORITY 2, PRIORITY 3.
- The 120VAC power output to the boiler circulator is provided by a relay located on the boiler's Pump/Communications Board. For each of the priorities, the control can be setup to run the boiler pump or to leave it off. It is recommended to set Blr Circ to OFF for DHW that is directly piped with its own DHW Circ.
- Each boiler has three input/output pairs (INPUT/OUTPUT 1, 2 and 3. Control setup prompts the user to assign each of these I/O pairs to a PRIORITY. The Control then knows which system (priority) to operate when the input receives a call for heat. On a call for heat to an input, the Control closes the corresponding output (120VAC) and begins controlling the boilers according to the setup for the assigned priority.
- The MAX ON TIME setting controls the maximum time a priority will be allowed to run before switching to a lower priority's call for heat. The MIN ON TIME setting controls the minimum time a priority will be operated before switching to a higher priority's call for heat, or the next lower priority.
- When multiple inputs are set up on the same priority, they will run at the same time if the priority and inputs are active.

Control operation

- The control responds to signals from:
  - Room thermostats.
  - DHW aquastats (if used).
  - Temperature sensors (boiler return, boiler supply, flue temperature) and, when used, system supply and system return, outdoor temperature). **For optimal performance, it is recommended to install the system supply and return sensors.**
- The control automatically adjusts blower speed (and gas flow rate) to match boiler output to space heating and/or DHW heating demand.
- The control provides three inputs and three outputs (for circulators or auxiliary devices) plus a fourth boiler circulator output.
- The outdoor temperature is used for supply temperature reset operation and for the warm weather shut down (WWSD) option.
- System presets:
  - The Control provides presets by system type (see Figure 64, page 73 for complete list).

Setting Up the Boiler	
Step 1	• DETERMINE input/output needs – • What are the inputs? – Thermostats, remote contacts, end switches, etc. • What does each control's output need to do? – operate a pump, activate an air louver, etc.
Step 2	• Install the boiler following all instructions in the ***SVF***™ Boiler Manual before proceeding further. • See the Advanced Manual for multiple boiler installations.
Step 3	• Connect wiring to the control inputs and outputs to accomplish the purposes set in Step 1. • Follow instructions in the Boiler Manual to start up and power the boiler.
Step 4	• Use the WIZARD (below) or enter control parameters manually (skip Wizard).

Control WIZARD

- The Wizard is available on initial setup of the boiler. It leads through a step-by-step setup procedure designed for the application chosen.
- Context-sensitive help is available to explain the purpose of key setup items.
- Advanced settings for single boiler applications can be accessed manually from the Contractor menu.

WIZARD Sequence	
Boiler Settings	• Altitude – ⚠WARNING – must be set correctly for proper operation. • Fuel (natural gas or propane) – ⚠WARNING – must be set correctly for proper operation – control will pause until this value is selected. • WWSD – set outdoor temperature above which space heating will be deactivated.
Inputs/ Outputs	• Select the usage of inputs 1, 2 and 3. • Determine usage of outputs 1, 2 and 3 (outputs correspond to inputs).
Set Priorities	• Assign priorities 1, 2 and 3 to the inputs.
System Settings	• Set system settings or leave at their defaults.
System Types	• Specify what system type is connected to each of the three outputs; each system type causes the control to preset. operating temperatures.
Output Activation	• (When applicable) Select when to activate AUX PUMP/ OUTPUT – by input, always on, external switch, etc.
Priority Switching	• Set maximum and minimum timings for priorities.
Date/Time	• Set date and time – important for control diagnostic logging.
Information	• Set installer name and contact information. • Enter CP#, install date, maintenance date, etc. • Set automatic maintenance notification timing.

Control operation and setup *(continued)*

Outdoor reset operation

1. Set desired temperatures for space heating zones.
2. For an explanation of the target temperatures and associated outdoor temperatures, see Figure 60.
3. The temperature settings discussed below are accessed in the priority menu for the applicable system. For detailed explanations of the priority menus, see Figure 68, page 76.

SUPPLY MAX

1. Set Supply Max to the required supply water temperature for the system at design maximum heat loss (typically 180°F for finned tube baseboard on new installations).

SUPPLY MIN

1. Supply Min should equal the desired minimum supply water temperature for the system.
2. This could be set as low as 70°F, which would supply "zero heat" when outdoor temperature is 70°F, because supply water temperature would equal room temperature.
3. See examples in Figure 60.

OD RESET MAX

1. OD RESET MAX means the outdoor temperature at which the target temperature reaches its minimum (Supply min.).
2. In the examples of Figure 60, this occurs at 70 °F (the factory default).

OD RESET MIN

1. OD RESET MIN means the outdoor temperature at which the target temperature reaches its maximum value (Supply max).
2. In the examples of Figure 60, this occurs at 0°F outside (the factory default setting).
3. OD RESET MIN should equal the ODT (outdoor design temperature) for the installation's location.

Remote target operation (0–10VDC input)

1. This function allows a remote analog input to regulate the supply temperature for control operation/modulation. This can be done for any priority, including network and local priorities for multiple boiler networks.
2. The settings discussed below are accessed in the priority menu for the applicable system. For detailed explanations of the priority menus, see Figure 68, page 76.
3. See Figure 61 for an explanation of target temperature vs voltage when using remote target operation.
4. In the priority menu for the applicable system, select 0-10v for the TARGET ADJUST setting.
5. In the same priority menu, select the VOLTS FOR MIN and VOLTS FOR MAX values. VOLTS FOR MIN sets the voltage value for the desired minimum supply temperature. VOLTS FOR MAX sets the voltage value for the desired maximum supply temperature.

Figure 60 Outdoor reset operation

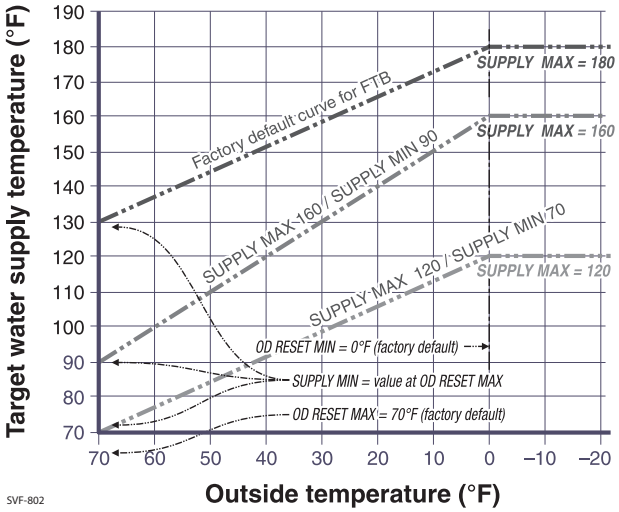

Figure 61 Remote target operation

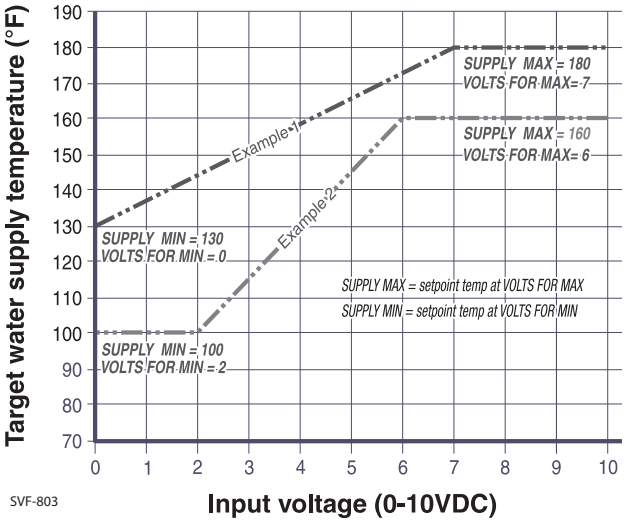

Remote modulation operation (0–10v input)

1. To use 0-10VDC for remote modulation, go to Contractor Menu -> Assign Inputs. Then change Input 1's source to 0-10V. The priority that is assigned to Input 1 cannot be used by any other Input.
2. The boiler comes on at 0.9VDC and turns off at 0.8VDC. 2 VDC = 10% input. 10 VDC = 100% input. These voltage settings are not adjustable.

Control operation and setup *(continued)*

Figure 62 ***SVF™*** **single boiler essential settings** (**REQUIRED** on initial start-up) — **see page 73 for explanation**

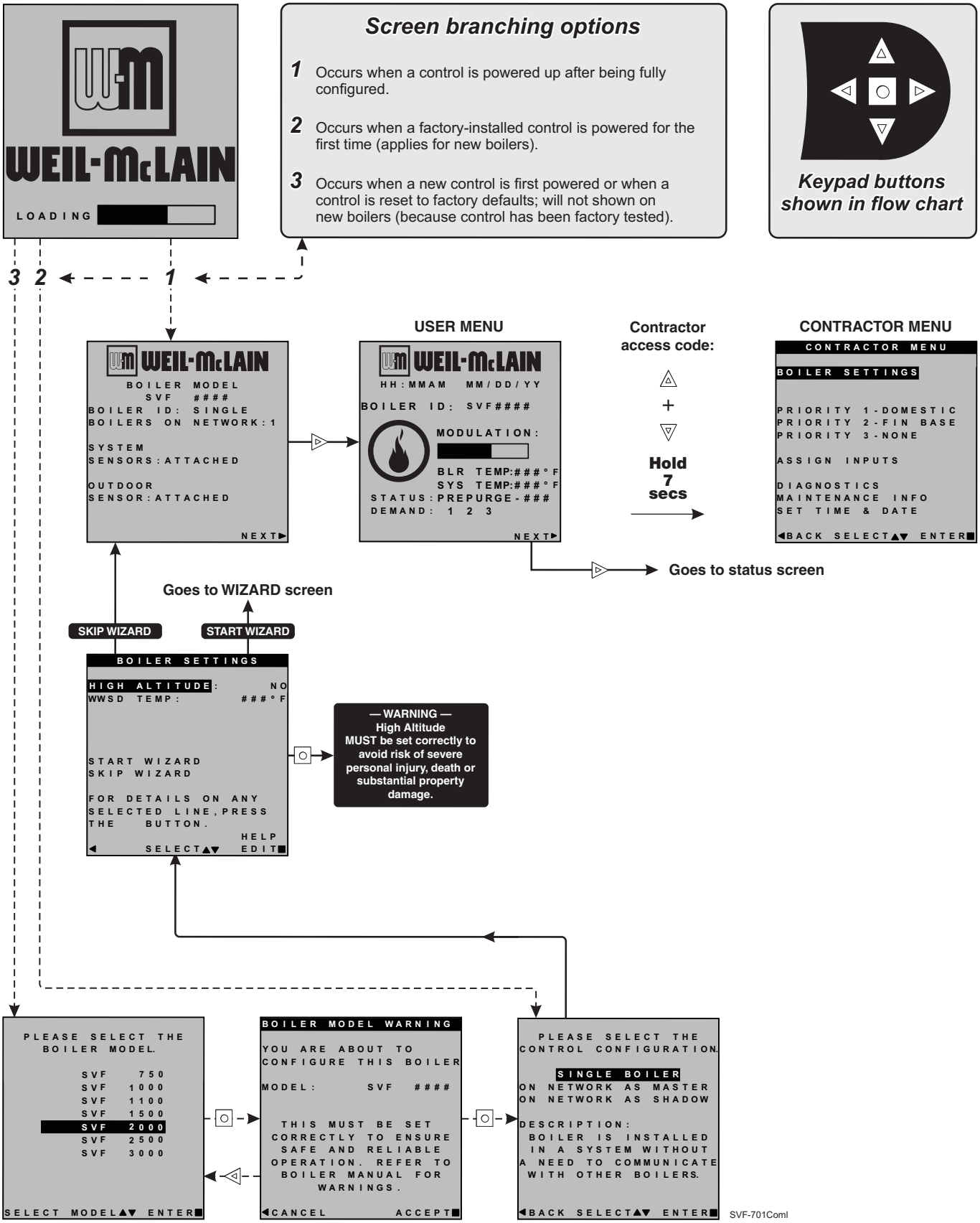

Control operation and setup *(continued)*

Figure 63 ***Unity***™ control display screens and typical navigation

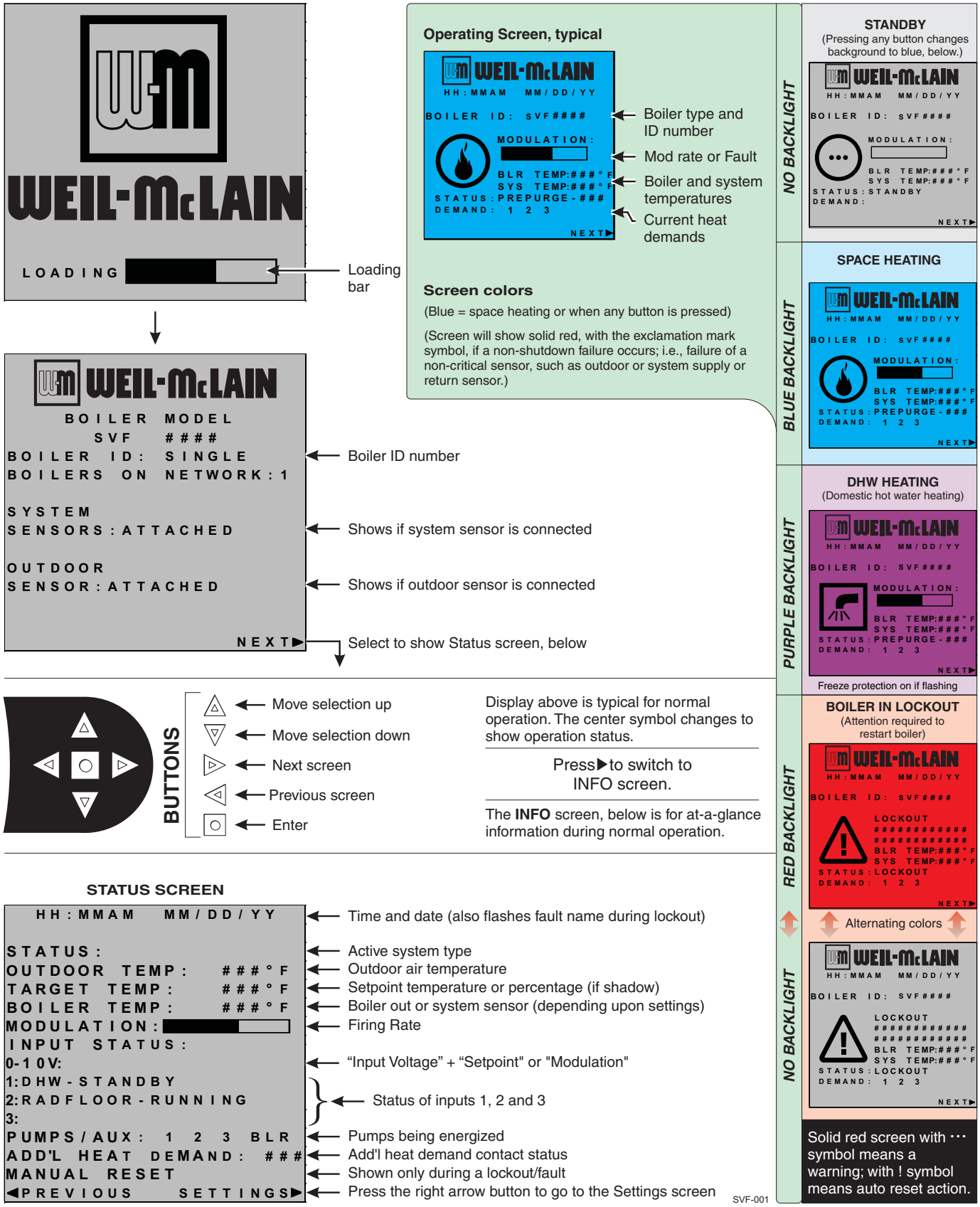

Control operation and setup *(continued)*

Figure 64 *Unity*™ control settings available in BASIC MODE (see Advanced Manual for ADVANCED MODE settings)

Available settings from CONTRACTOR MENU		
Boiler Settings Menu	**Priority 2 menu**	**Assign Inputs menu**
• Boiler Model	• Inputs Assigned (non-selectable)	**Input 1: TT1**
• Control Type	• System Type	• Priority 1, 2 or 3
• High Altitude	• Target Mod Sensor (non-selectable)	• Source (TT1 or 0-10v)
• LP GAS	• Target Adjust (non-selectable)	• AUX PUMP/OUTPUT
• Manual Reset High Limit Temp	• Supply Max	• Off
• WWSD Temp	• Supply Min (not available for DHW) *	
• Adjust Outdoor	• OD Reset Max (or Volts for Max) *	**Input 2: TT2 and Input 3:TT3**
• Circulator Exercising	• OD Reset Min (or Volts for Min) *	• Priority 1, 2 or 3
• Freeze Protect Circs	• Boost Time *	• AUX PUMP/OUTPUT
• Reset Factory Default		• Off
	Priority 3 menu	
	• Inputs Assigned (non-selectable)	**Diagnostics menu**
Priority 1 menu	• System Type	• See Figure 72, page 79 for details.
• Inputs Assigned (non-selectable)	• Target Mod Sensor (non-selectable)	
• System Type	• Target Adjust (non-selectable)	**Maintenance Info menu**
• Target Mod Sensor (non-selectable)	• Supply Max	• See Figure 77, page 84 for details.
• Target Adjust (non-selectable)	• Supply Min (not available for DHW) *	
• Supply Max	• OD Reset Max (or Volts for Max) *	**Set Date and Time menu**
• Supply Min (not available for DHW) *	• OD Reset Min (or Volts for Min) *	• See Figure 77, page 84 for details.
• OD Reset Max (or Volts for Max) *	• Boost Time *	
• OD Reset Min (or Volts for Min) *	* These items only appear in the menus if Target Adjust is active.	
• Boost Time *		

Figure 65 System types available in BASIC MODE (each option shown with factory settings)

System Type	8-Character Abbreviation	3-Character Abbreviation	Supply Max °F	OD Reset Min °F	Supply Min °F	OD Reset Max °F	Run Boiler Pump	Run AUX PUMP/ OUTPUT
Fan-coil	FAN-COIL	FCL	180	0	140	70	YES	YES
Finned Tube Baseboard	FIN BASE	FTB	180	0	130	70	YES	YES
Cast Iron Baseboard	IRONBASE	CIB	180	0	120	70	YES	YES
Cast Iron Radiators	RADIATOR	CIR	180	0	120	70	YES	YES
Radiant - slab on grade	RAD SLAB	RSG	120	0	80	70	YES	YES
Radiant - thin slab	RAD SLAB	RTS	140	0	80	70	YES	YES
Radiant - below floor (staple up)	RADFLOOR	RSU	160	0	90	70	YES	YES
Radiant - above floor (sleeper system)	RADFLOOR	RAF	140	0	90	70	YES	YES
Domestic Hot Water	DOMESTIC	DHW	180	N/A	N/A	N/A	NO	NO
Custom (user defined)	XXXXXXXX (user input)	first three of user input	180	0	70	70	YES	YES

CONTRACTOR menus

WARNING **Boiler Model, Altitude and Fuel Type are critical settings.** Failure to set correctly could result in severe personal injury, death or substantial property damage.

1. Access contractor menus by pressing and holding the UP and DOWN arrow keys at the same time for 7 seconds.
2. See the following pages for explanations of control setting options.

Figure 66 *Unity*™ control menu access — accessing contractor menus

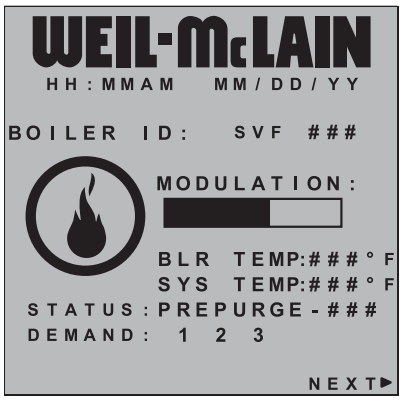

△ + ▽ **Hold 7 secs**

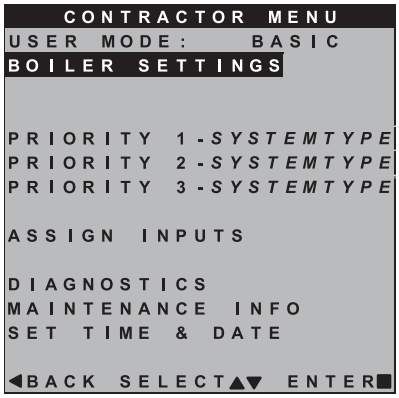

Highlight item, then press ○ **to select** →

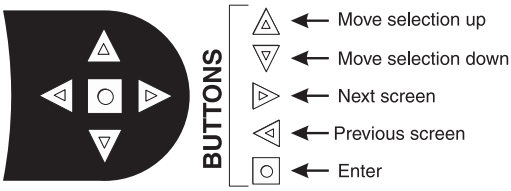

CONTROL NAVIGATION BUTTONS

SVF-002a

MENU ITEM	PURPOSE	More information
USER MODE	• The default for this setting is **BASIC** mode. Screens shown in this manual assume the USER MODE is set to BASIC. For advanced features available in **ADVANCED** mode, see the ***SVF*** ™ Advanced Manual.	
BOILER SETTINGS	• Set/change boiler model, control type, high altitude setting, ODT sensor requirement, manual reset, high limit and WWSD temperature settings, outdoor sensor temp adjustment, circulator exercising, freeze protection setup, and restore to factory default option.	See page 75
PRIORITY 1	• These settings control operating temperatures and behaviors for systems that are assigned to "PRIORITY 1."	See page 76
PRIORITY 2	• These settings control operating temperatures and behaviors for systems that are assigned to "PRIORITY 2."	See page 76
PRIORITY 3	• These settings control operating temperatures and behaviors for systems that are assigned to "PRIORITY 3."	See page 76
ASSIGN INPUTS	• These settings assign Priority 1, 2 or 3 to each of the three inputs to the control.	See page 77
DIAGNOSTICS	• Use to review current and historical information including previous lockouts.	See page 79
MAINTENANCE INFO	• Used to set contractor contact information, boiler information and maintenance dates.	See page 84
SET TIME & DATE	• Use to set date and time — important since fault occurrences are date/time stamped.	None

Screens shown above are typical only. Actual screens depend on control settings chosen.

BOILER SETTINGS menu, BASIC mode

⚠WARNING **Boiler Model, Altitude and Fuel Type are critical settings.** Failure to set correctly could result in severe personal injury, death or substantial property damage.

1. Access contractor menus by pressing and holding the UP and DOWN arrow keys at the same time for 7 seconds.
2. See Figure 66, page 74 for the screen sequences up to the CONTRACTOR menu.

Figure 67 *Unity*™ BASIC mode BOILER SETTINGS options (USER MODE must be set to BASIC)

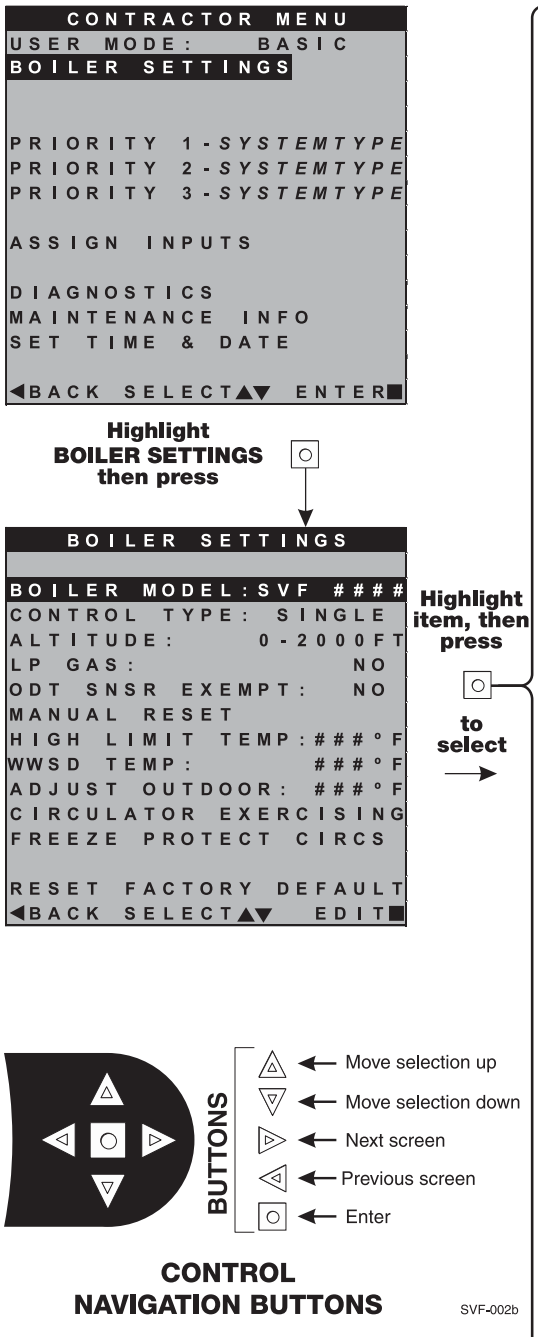

MENU ITEM	DESCRIPTION
BOILER MODEL	• ⚠WARNING MUST be set to correct model. • Check the boiler model against the model listed on the boiler's rating plate. Change the selection to the correct model if not. Also verify the model number on the control display at power-up. Failure to correct would result in severe personal injury, death or substantial property damage.
CONTROL TYPE	• Select single, master or shadow. Must be set to Single for basic mode.
HIGH ALTITUDE	• ⚠WARNING If the boiler is installed at an altitude above 5500 feet, select YES for high altitude. The control will automatically adjust firing rates (blower speeds) to compensate for altitude. Altitude MUST be set correctly to avoid risk of severe personal injury, death or substantial property damage.
LP GAS	• ⚠WARNING MUST be correct – YES if LP Gas is used or NO if Natural Gas is used. Follow screen instructions to change if necessary.
MANUAL RESET HIGH LIMIT TEMP	• If boiler outlet water temperature exceeds this temperature, the Control will shut down the boiler and enter lockout. Changing this setting is NOT recommended, unless required by code.
WWSD TEMP	• WWSD stands for warm weather shut down. It means the boiler will not be allowed to fire if the outside temperature is greater than the WWSD setting. When the boiler is kept off because the outside temperature is above WWSD, the graphic display will show WWSD, and the boiler will remain in standby until the outside temperature drops below WWSD temperature. WWSD does not apply to DHW systems. The outdoor sensor must be installed to use this function.
ADJUST OUTDOOR	• Use this setting to calibrate the outdoor sensor when needed to compensate for variations in lead length or other factors that could affect total resistance in sensor circuit.
CIRCULATOR EXERCISING	• For each circulator, select whether you want the control to automatically start the circulator and run for 10 seconds for each 72-hour period of inactivity.
FREEZE PROTECT CIRCS	• This function automatically fires the boiler at low fire and starts the circulators chosen if the heat exchanger sensors detect a temperature less than 45 °F. Burner is turned on if temperature drops below 40 °F. Circulators and burner turn off when the temperature rises above 48 °F.
RESET FACTORY DEFAULTS	• Use this function to restore all control settings to factory default values — will require complete restart and setup of control after resetting. Record information from the MAINTENANCE screen and any history information that may be of use in the future. ALL stored data is eliminated when reset to defaults except for boiler model number.

Screens shown above are typical only. Actual screens depend on control settings chosen.

PRIORITY 1, 2, 3 menus, BASIC mode

WARNING **Boiler Model, Altitude and Fuel Type are critical settings.** Failure to set correctly could result in severe personal injury, death or substantial property damage.

1. Access contractor menus by pressing and holding the UP and DOWN arrow keys at the same time for 7 seconds.
2. See Figure 66, page 74 for the screen sequences up to the CONTRACTOR menu.

Figure 68 *Unity*™ BASIC mode PRIORITY options (USER MODE must be set to BASIC).

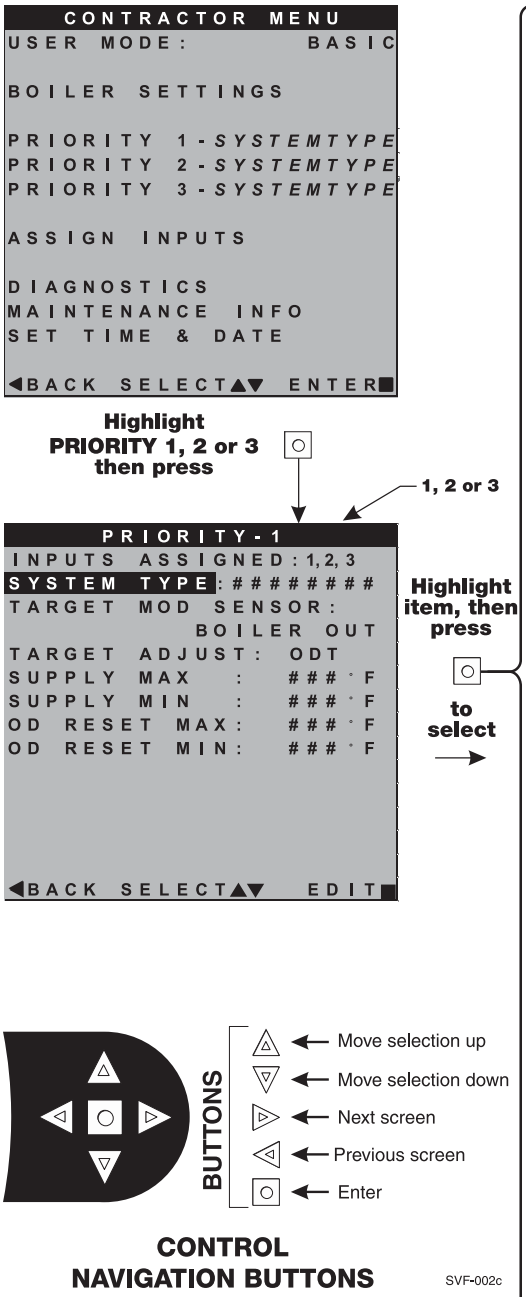

CONTROL NAVIGATION BUTTONS

SVF-002c

MENU ITEM	DESCRIPTION
INPUTS ASSIGNED	• Lists all the inputs already assigned to this PRIORITY. Inputs will be listed as 1, 2, 3. • Shows NONE if there are no inputs assigned to this priority .
SYSTEM TYPE	• Select the system type for this PRIORITY, based on the heating terminal units in the system (see Figure 64, page 73). Use the CUSTOM selection to set the control for a different system type. The factory preset values for SUPPLY MAX, SUPPLY MIN, OD RESET MAX and OD RESET MIN are chosen based on the normal best setting for the terminal units.
TARGET MOD SENSOR	• Choose SYSTEM SUPPLY or BOILER OUT to determine which will be the primary temperature sensor. The control will modulate boiler input to reach the TARGET temperature. (Default is System Supply.) If system sensors are not used, boiler defaults to using heat exchanger outlet sensor in place of system sensor. • Not adjustable in Basic Mode, see Advanced Manual for information on adjusting this parameter.
TARGET ADJUST	• Select how target temperature is calculated by control: NONE (no reset, fixed target temperature), 0-10V (target temperature based on analog input from remote source), ODT (outdoor reset operation; default setting). • Not adjustable in Basic Mode, see Advanced Manual for information on adjusting this parameter.
SUPPLY MAX	• Set SUPPLY MAX to the required supply water temperature for the system at design maximum heat loss (typically 180 °F for finned tube baseboard on new installations.)
SUPPLY MIN	• SUPPLY MIN should equal the desired minimum supply water temperature for the system. • This line is not shown on priorities configured as DHW system type or Heating system type, if outdoor temperature sensor not used. See Advanced Manual for information on adjusting this parameter .
OD RESET MAX	• OD RESET MAX is the outdoor temperature at which the target temperature reaches its minimum (SUPPLY MIN). • This line is not shown on priorities configured as DHW system type or Heating system type, if outdoor temperature sensor not used. See Advanced Manual for information on adjusting this parameter .
OD RESET MIN	• OD RESET MIN means the outdoor temperature at which the target temperature reaches its maximum value (SUPPLY MAX). • OD RESET MIN should equal the ODT (outdoor design temperature) for the installation's location. • This line is not shown on priorities configured as DHW system type or Heating system type, if outdoor temperature sensor not used. See Advanced Manual for information on adjusting this parameter .

Screens shown above are typical only. Actual screens depend on control settings chosen.

ASSIGN INPUTS menu, BASIC mode

WARNING **Boiler Model, Altitude and Fuel Type are critical settings.** Failure to set correctly could result in severe personal injury, death or substantial property damage.

1. Access contractor menus by pressing and holding the UP and DOWN arrow keys at the same time for 7 seconds.
2. See Figure 66, page 74 for the screen sequences up to the CONTRACTOR menu.

Figure 69 *Unity*™ BASIC mode ASSIGN INPUT options (USER MODE must be set to BASIC) — see Figure 70, page 78 and Figure 71, page 78 for explanation of AUX PUMP/OUTPUT settings.

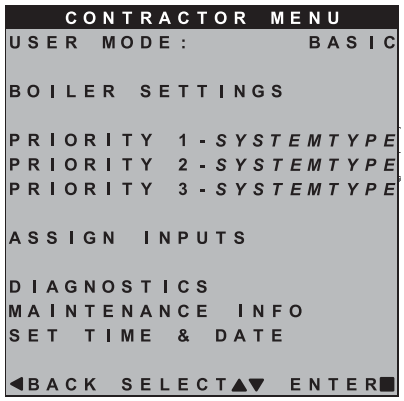

Highlight ASSIGN INPUTS then press

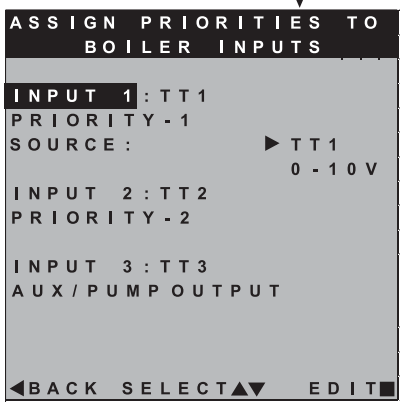

Highlight item, then press to select

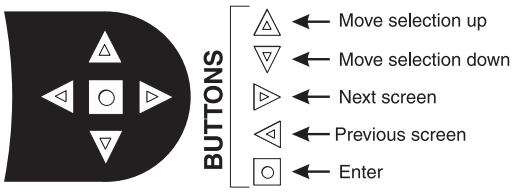

CONTROL NAVIGATION BUTTONS

SVF-002db

MENU ITEM	DESCRIPTION
Overview	• There are three priority levels defined by the settings chosen in Figure 68, page 76. • For DHW priority, make sure PRIORITY 1 is defined for a DHW system. • If DHW priority is required and analog input is used for space heating, assign INPUT 2 to the DHW aquastat (TT2) and INPUT 1 as PRIORITY 2 and SOURCE set to 0-10V.
INPUT 1	• Assign priority (system type) for INPUT 1 — options are: • PRIORITY 1 — assigns INPUT 1 to PRIORITY 1 system. • PRIORITY 2 — assigns INPUT 1 to PRIORITY 2 system • PRIORITY 3 — assigns INPUT 1 to PRIORITY 3 system • AUX PUMP/OUTPUT • OFF • NOTE: For INPUT 1 only, select SOURCE = TT1 for thermostat input or 0-10V if analog input is required.
INPUT 2	• Assign priority (system type) for INPUT 2 — options are: • PRIORITY 1 — assigns INPUT 2 to PRIORITY 1 system. • PRIORITY 2 — assigns INPUT 2 to PRIORITY 2 system • PRIORITY 3 — assigns INPUT 2 to PRIORITY 3 system • AUX PUMP/OUTPUT • OFF
INPUT 3	• Assign priority (system type) for INPUT 3 — options are: • PRIORITY 1 — assigns INPUT 3 to PRIORITY 1 system. • PRIORITY 2 — assigns INPUT 3 to PRIORITY 2 system • PRIORITY 3 — assigns INPUT 3 to PRIORITY 3 system • AUX PUMP/OUTPUT • OFF

Screens shown above are typical only. Actual screens depend on control settings chosen.

ASSIGN INPUTS menu, BASIC mode *(continued)*

Figure 70 AUX PUMP/OUTPUT operation (accessed in ASSIGN INPUTS menu – see Figure 69, page 77)

Option	Activation conditions	Suggested uses
ALWAYS ON	• Output is always energized whenever the control is powered.	• Hot loop for seasonal boilers that are manually shut down at end of season and started up at start of heating season.
EXTERNAL SWITCH	• The output is energized on closure of an external switch wired to this input and is de-energized when the external switch opens.	• Hot loop for boilers whose CH is manually shut down at end of season and started up at start of heating season, but remain available for local calls (DHW, etc.).
OUTDOOR BELOW WWSD	• This output is energized only when outdoor temperature is below the WWSD setting (see BOILER SETTINGS menu, Figure 67, page 75). • This setting is non-selectable if WWSD is set to OFF or ODT is not connected at initial boiler power. If Outdoor Below WWSD is already chosen and WWSD is later set to OFF, Outdoor Below WWSD will behave as Always On.	• Hot loop for boilers whose CH is automatically shut down based on outdoor temperature (inferred heat loss), but remain on for local calls (DHW, etc.).
ANY TT INPUT	• The assigned output is energized if there is an input closure on this boiler. • The assigned output will de-energize once there are; no input on this boiler, post-purge has finished, and post-pump time has expired. • If the closed input is configured for a heat demand, its output will de-energize after post-purge and post-pump.	• Energize a system pump relay if pump must run during all heating calls.

ANY TT INPUT BY ITS PRIORITY SETTINGS	• The assigned output is energized:
	  • If there is an input closure on this boiler.
	  . . . and . . .
	  • RUN AUX PUMP/OUTPUT is set to YES for the priority assigned to the closed input.
	• The assigned output will de-energize once there are; no input closures on any of the network boilers, post-purge has finished, and post-pump time has expired.
		• Energize a system pump relay if pump must run only on some heat calls (such as systems with locally-connected DHW heating).

ANY BURNER DEMAND	• The assigned output is energized when the boiler receives a call for heat and starts to pre-purge. • The assigned output is de-energized once the burner is off and post-purge is complete.	• Use for interlocking with combustion air damper, flow switch, etc.
DAMPER CONTROL	• The assigned output is energized when the boiler receives a call for heat and starts to pre-purge. • The assigned output is de-energized once the burner is off and post-purge is complete.	• Use for interlocking with combustion air louvers (ie louver wall), flow switch, etc. • Individual combustion air damper kit.

Figure 71 AUX PUMP/OUTPUT operation — start, run and stop, based on boiler status

Option	Standby	TT Closed	Pre-Pump	Pre-Purge	Burner Running	Post-Purge	Post-Pump	Standby	Comments
ANY TT INPUT OR ANY TT INPUT BY ITS PRIORITY SETTINGS	*off*	*ON* →						*off*	• See Figure 70 for explanation of differences between the ANY TT INPUT options.
ANY BURNER DEMAND	*off*	*off*	*off*	*ON* →			*off*	*off*	

DIAGNOSTIC menu

Figure 72 DIAGNOSTICS menu navigation (see Figure 63, page 72 for access information)

Menus	Next screen	Next screen	Next screen	Next screen
Follow information at the bottom of each screen to navigate to next/previous screen or enter/save data				
DIAGNOSTICS	TEMPERATURES	STATUS: ########## BOILER OUT1: ### °F BOILER OUT2: ### °F BOILER IN: ### °F SYSTEM SUPPLY: ### °F SYSTEM RETURN: ### °F FROM SENSOR: ###### FLUE 1: ### °F FLUE 2: ### °F OUTDOOR TEMP: ### °F FROM SENSOR: ######	See following pages for details.	
	INPUTS	STATUS: ########## INPUT1: ######## (8-character system type) INPUT2: ######## (8-character system type) INPUT3: ######## (8-character system type) 0–10V INPUT: ##. #V LINKED TO MASTER: ### DEMAND OF MASTER: ### MANUAL/AUTO LIMIT: ######/###### LOW WTR CUTOFF: ###### AIR P-SWITCH: ###### GAS P-SWITCH: ###### CLOSURE SWITCH: ###### BLOWER SPEED: ####RPM FLAME SIGNAL: ###	See following pages for details.	
	OUTPUTS	STATUS: ########## GAS VALVE: ### CIRC OUTPUT 1: ### CIRC OUTPUT 2: ### CIRC OUTPUT 3: ### BOILER CIRC: ### BLOWER SIGNAL: ###% ADD'L HEAT DEMANDS: ### ALARM: ### 0–10V OUTPUT: ##. #V	See following pages for details.	
	RUNTIME	BURNER TIME: ###HR ROTATE TIME: ###DAYS INPUT1 TIME: ###HR INPUT2 TIME: ###HR INPUT3 TIME: ###HR NETWORK TIME: ###HR IGNITION COUNT: ###	See following pages for details.	
	MASTER-SHADOW COMM (shown on shadow boilers only)	Boiler ID: ############ Linked to Master: ### Boilers on Network: # Requested to Run: ### Type: ######-## Requested Mod Rate: ### Max Boiler Temp: ### °F Boiler ON Diff: ## °F Boiler OFF Diff: ## °F	See following pages for details.	
	NETWORK BOILERS (shown on master boilers only)	Shows firing rate, boiler temperature, active priority, with system type and sequence order of all boilers on the network.	See following pages for details.	

DIAGNOSTICS menu *(continued)*

Figure 73 DIAGNOSTICS menu navigation, continued (see Figure 73, page 80 for access information)

Menus	Next screen	Next screen	Next screen	Next screen
Follow information at the bottom of each screen to navigate to next/previous screen or enter/save data				
DIAGNOSTICS *(cont.)*	NETWORK INPUTS (shown on master boilers only)	Shows input status of all network boiler inputs.		
	SOFTWARE VERSIONS	DISPLAY WM#.## MAIN MICRO WM#.## SECOND MICRO WM#.##	See following pages for details.	
	PAST ERRORS	CONTROL FAULTS: ### IGNITION RETRIES: ###	See following pages for details.	
		MANUAL RESET CNT: ###	See following pages for details.	
		AUTO RESET CNT: ###	See following pages for details.	
		LOCKOUT HISTORY 1 LOCKOUT HISTORY 2 LOCKOUT HISTORY 3	LOCKOUT HISTORY # FAULT NAME: #### FAULT TYPE: #### TIME: HH:MM AM DATE: MM/DD/YY STATUS: ######## TEMPERATURES INPUTS OUTPUTS	TEMPERATURES INPUT STATUS OUTPUT STATUS
	MANUAL TEST MODE (Single boiler or network Shadow boiler)	STATUS: ######## TARGET: ### °F or "%" for network MODULATION: ######## BOILER OUT: ### °F BOILER IN: ### °F SYSTEM SUPPLY: ### °F SYSTEM RETURN: ### °F FLUE: ### °F OUTDOOR: ### °F BLOWER SIGNAL: ###% BLOWER SPEED: ###RPM FLAME SIGNAL: ### FORCE RATE: AUTO	See following pages for details.	
	MANUAL RESET	PRESS ENTER TO RESET THE FOLLOWING ERROR (SCREEN SHOWS A LIST OF ERRORS)	See following pages for details.	

DIAGNOSTICS menu *(continued)*

Figure 74 DIAGNOSTICS menu details (see Figure 63, page 72 for access information)

Menu/Item	Comment
Temperatures	
Status	Current operating status of the boiler. Prepurge, Ignition, Name of the system Type being satisfied, post purge, Warm Weather Shut down, Trouble
Boiler Out1	Temperature of the first sensing element of the boiler's heat exchanger outlet sensor
Boiler Out2	Temperature of the second sensing element of the boiler's heat exchanger outlet sensor
Boiler In	Temperature of the boiler's heat exchanger inlet sensor
System Supply	Temperature of the system water after the boiler loop
System Return	Temperature of the system water returning to the boiler loop
From Sensor	Displays where System Supply/Return values are being read from. Most relevant when using multiple sensors connected to the same Master Boiler Network. When Shadow boilers are connected, this will specify which boiler it is reading.
Flue1	Temperature of the first sensing element of the boiler's flue gas sensor
Flue2	Temperature of the second sensing element of the boiler's flue gas sensor
Outdoor	Temperature of the remote outdoor air temperature sensor

Inputs	
Status	Current operating status of the boiler. Prepurge, Ignition, Name of the system Type being satisfied, post purge, Warm Weather Shut down, Trouble
Input 1	Call for heat status on Input 1 (Input 1 can be TT1 or 0-10VDC input)
Input 2	Call for heat status on Input 2
Input 3	Call for heat status on Input 3
0 –10V Input	Voltage input for target adjust or modulation for single boiler
Linked to Master	For Multiple Boiler Networks. Shows if current control is connected to Master boiler
Demand of Master	For Multiple Boiler Networks. Shows if the Master boiler is calling this boiler heat demand
Manual/Auto Limit	External manual limit on low voltage terminal strip (on left)
Low Wtr Cutoff	Low water cutoff device (inside boiler jacket)
Air P-Switch	Limit device (inside boiler jacket) that will shut off the boiler if flue pressure becomes too high
Gas P-Switch	Limit device that will shut off the boiler if gas pressure gets too high or low
Closure Switch	P7 jumper circuit closed or open (flow switch, CAD, etc.)
Blower Speed	Feedback from blower sensor
Flame Signal	Number indicating the presence and quality of the flame used to shut down or boost the boiler
Outputs	
Status	Current operating status of the boiler. Prepurge, Ignition, Name of the system Type being satisfied, post purge, Warm Weather Shut down, Trouble
Gas Valve	Control's gas valve circuit status
Circulator 1	Control's circulator 1 relay status
Circulator 2	Control's circulator 2 relay status
Circulator 3	Control's circulator 3 relay status
Boiler Circ 4	Boiler's circulator
Blower Signal	Control's signal controlling the blower speed
Additional Heat Demand	Additional heat demand contact status
Alarm	Alarm contact status
0 –10V Output	Voltage being output, by P16, pins 1 & 2

DIAGNOSTICS menu *(continued)*

Figure 75 DIAGNOSTICS menu details (continued) (see Figure 63, page 72 for access information)

Menu/Item	Comment
Run Times	
Burner Time	Displays cumulative time the burner has been active (can be increased by user)
Rotate Time	Records the days of operation passed from the last time the Master boiler rotated the firing sequence.
Input 1 Time	Displays cumulative time that Input 1 has been closed (Or 0-10V ≥ 1 volt)
Input 2 Time	Displays cumulative time that Input 2 has been closed
Input 3 Time	Displays cumulative time that Input 3 has been closed
Network Time	Records time this boiler was running on a network call for heat generated by the Master boiler
Ignition Count	Displays total number of successful ignitions
Master-Shadow Comm	
Boiler ID	Displays boiler control type and ID number
Linked to Master	Shows if control is currently linked to a Master control
Boilers on Network	Shows number of boilers currently on network
Requested to Run	Shows if this control is being requested to satisfy a network call
Type	Shows whether the control is Network-P1, Network-P2, or NONE
Requested Mod Rate	Rate coming from the Master
Max Boiler Temp	Displays maximum allowable boiler temperature
Boiler On Diff	Temperature differential from master boiler for network priorities
Boiler Off Diff	Temperature differential from master boiler for network priorities
Network Boilers	**For multiple boilers only – See *SVF*™ Advanced manual**
###%	Shows current rate of boiler
###F	Shows Boiler Out temperature of boiler
######	Shows priority being satisfied, updated based on active demand
######	Shows system type of call for heat, updated based on active demand
# OF #	Shows the sequence position of that boiler in all the boilers available
BLR#	Shows boiler number this data belongs to
Network Inputs	
Boiler number	Displays boiler number
Inputs	Displays input's configuration and whether it is active. If input is active, it will be displayed in BOLD print
Software Versions	
Display	Software version of the microprocessor on the display circuit board
Main Micro	Software version of the main microprocessor on the control circuit board
Second Micro	Software version of the second microprocessor on the control circuit board
TO RESET ALL HISTORY COUNTERS TO ZERO:	To reset all history counters to zero: Enter the DIAGNOSTICS menu. Then press and hold the left and right arrows located below the control display. Hold for 5 seconds. This will cause ALL history to be deleted. To maintain history, reset counters individually.
PAST ERRORS	
Control Fault	Displays number of control faults
Ignition Retries	Displays cumulative ignition attempts. It is recommended that his be reset during yearly maintenance by holding down the Left and Right arrows or by selecting this line and pressing the Enter button
Manual Reset Cnt	Displays number of manual reset lockouts since last cleared
Auto Reset Cnt	Displays number of auto reset lockouts since last cleared
Lockout History 1	Choose this to view the most recent error recorded
Fault Name	Displays the name of the fault that occurred
Fault Type	Displays the type of fault that occurred

DIAGNOSTICS menu *(continued)*

Figure 76 DIAGNOSTICS menu details (continued) (see Figure 63, page 72 for access information)

Menu/Item	Comment
Time	Displays time that lockout occurred
Date	Displays date that lockout occurred
Status	Displays what the status of the boiler was at the time of the error
Temperatures	Choose this to view the Boiler Temperatures at the time of the error
Inputs	Choose this to view the status of the Boiler Inputs at the time of the error
Outputs	Choose this to view the status of the Boiler Outputs at the time of the error
Lockout History 2	Choose this to view the second most recent error recorded
Fault Name	Displays the name of the fault that occurred
Fault Type	Displays the type of fault that occurred
Time	Displays time that lockout occurred
Date	Displays date that lockout occurred
Status	Displays what the status of the boiler was at the time of the error
Temperatures	Choose this to view the Boiler Temperatures at the time of the error
Inputs	Choose this to view the status of the Boiler Inputs at the time of the error
Outputs	Choose this to view the status of the Boiler Outputs at the time of the error
Lockout History 3	Choose this to view the third most recent error recorded
Fault Name	Displays the name of the fault that occurred
Fault Type	Displays the type of fault that occurred
Time	Displays time that lockout occurred
Date	Displays date that lockout occurred
Status	Displays what the status of the boiler was at the time of the error
Temperatures	Choose this to view the Boiler Temperatures at the time of the error
Inputs	Choose this to view the status of the Boiler Inputs at the time of the error
Outputs	Choose this to view the status of the Boiler Outputs at the time of the error

Manual Test Mode	
Status	Current operating status of the boiler. Prepurge, Ignition, Name of the system Type being satisfied, post purge, Warm Weather Shut down, Trouble
Target	Calculated target temperature based on outdoor temp or the max target if no ODR
Modulation	Displays what sensor the boiler is using to modulate from. If the boiler is being self-limited, this may also display what the cause is
Boiler Out	Temperature of the outlet sensor on the boiler heat exchanger
Boiler In	Temperature of the inlet sensor on the boiler heat exchanger
System Supply	Temperature of the system water after the boiler loop
System Return	Temperature of the system water returning to the boiler loop
Flue	Temperature of flue gases
Outdoor	Temperature of outdoor air
Blower Signal	Control's signal controlling the blower speed
Blower Speed	Blower's feedback to the control
Flame Signal	Number indicating the presence and quality of the flame used to shut down or boost the boiler
Force Rate	Used to manually force a rate during a call for heat. Choose auto for normal operation

Manual Reset	Reset selected condition

MAINTENANCE, DATE AND TIME menus

Figure 77 MAINTENANCE, DATE AND TIME menus — navigation (see Figure 63, page 72 for access information)

Maintenance Info	Comment
Name	Contractor name to appear in maintenance reminders and during lockouts
Phone	Contractor phone number
Model	Displays the boiler model selected in the boiler setup
Consumer Protection (CP) Number	Enter the CP# of the boiler
Installed	Enter the date the boiler was installed
Last Date	Date automatically entered when Reset Reminder is chosen by contractor
Next Date	Date automatically calculated when Reset Reminder is selected by contractor
Interval Settings	Contractor selects maintenance reminder frequency based on service history
Reset Reminder	Contractor selects this to update Last maintenance Date and Next Date. Homeowner uses this to ignore the reminder and update only the Next Date.

Set Time and Date	
Year	Set year (homeowner or contractor)
Month	Set month (homeowner or contractor)
Day	Set day (homeowner or contractor)
Hour	Set hour (homeowner or contractor)
Minute	Set minute (homeowner or contractor)

MAINTENANCE INFO

1. Use this section to enter contractor's information, CP number, install date and to enter an automatic notice for maintenance (default is 12 months). Because this shows on the display, it is an automatic means of notifying the homeowner of need for scheduled maintenance by the technician. Select RESET REMINDER to reset for the next maintenance date.

SET TIME AND DATE

1. Enter current date and time. This allows correct maintenance reminder timing and provides date and time stamp for lockout histories on ERROR screen in Diagnostic Menu.

Startup — fill the system

Clean system to remove sediment

WARNING **You must thoroughly flush the system** (without boiler connected) to remove sediment. The high-efficiency heat exchanger can be damaged by buildup or corrosion due to sediment.

1. If necessary, use an approved chemical cleaning agent, following the manufacturer's guidelines for procedures.
   a. A list of approved cleaning products is available at www.Weil-McLain.com.
   b. See Replacement parts at the end of this manual for Weil-McLain part numbers to obtain cleaning agents through a Weil-McLain distributor.
2. For zoned systems, flush each zone separately through a purge valve.
   a. If purge valves and isolation valves are not already installed, install them to properly clean the system.
3. Flush the system until water runs clean and you are sure all piping is free of sediment.

WARNING **Do not** use petroleum-based cleaning or sealing compounds in the boiler system. Damage to elastomer seals and gaskets in the system could occur, resulting in substantial property damage.

Before filling the boiler and system with water, verify the water chemistry complies with these instructions.

Failure to comply could result in boiler failure or unreliable operation.

WARNING **Install a strainer or other mechanical separator device** if necessary to ensure sediment will not enter the boiler.

Water chemistry

Water pH between 7.0 and 8.5

1. Maintain boiler water pH between 7.0 and 8.5. Test the water with litmus paper or have it chemically analyzed by a water treatment company.
2. If pH differs from above, consult a local water treatment company for treatment needed.
3. Softened water may be used to fill boiler providing Sentinel X100 is added to the system at the proper dosage and properly maintained. Without Sentinel X100, softened water **must not** be used or boiler corrosion may occur.

Hardness must be less than 7 grains

1. Consult local water treatment companies for unusually hard water areas (above 7 grains hardness).

Chlorine concentration must be LESS THAN 150 ppm

1. Filling with chlorinated fresh water should be acceptable since drinking water chlorine levels are typically less than 5 ppm.
2. Do not use the boiler to directly heat swimming pool or spa water.
3. Do not fill boiler or operate with water containing chlorine in excess of 150 ppm.

Antifreeze with Inhibitor

WARNING Use only antifreeze listed by Weil-McLain as suitable for use with ***SVF***™ Gas Boilers. See additional requirements in the antifreeze WARNING on the next page.

1. A list of approved antifreeze products is available at www.Weil-McLain.com.
2. See Replacement parts at the end of this manual for Weil-McLain part numbers to obtain antifreeze through a Weil-McLain distributor.

Use the correct amount of antifreeze

1. Determine the **freezing temperature needed** (to protect against lowest likely temperature the system water will encounter).
2. Find the **antifreeze percentage** (concentration by volume) needed for this temperature from the antifreeze manufacturer's data on the antifreeze container.

WARNING **DO NOT exceed 50% by volume** concentration of antifreeze.

3. Calculate the **total volume** (gallons) of all system piping and components, including the expansion tank and boiler.
   a. Boiler water content is listed on page 120.
   b. Include the expansion tank water content.
4. The gallons of antifreeze required equals the total water volume multiplied times the antifreeze percentage required.
5. Verify water flow rate and temperature rise with antifreeze is in line with Figure 10, page 15 requirements.

Fill and test water system

1. Fill system only after ensuring the water meets the requirements of this manual.
2. Close manual and automatic air vents and boiler drain valve.
3. Fill to correct system pressure. Correct pressure will vary with each application.
   a. Pressure will rise when boiler is turned on and system water temperature increases.
   b. Operating pressure should be no higher than 80% of the relief valve setting for most systems.
4. At initial fill and during boiler startup and testing, check the system thoroughly for any leaks. Repair all leaks before proceeding further.

WARNING **Eliminate all system leaks**. Continual fresh make-up water will reduce boiler life. Minerals can build up in sections, reducing heat transfer, overheating heat exchanger, and causing heat exchanger failure.

WARNING X100 inhibitor is recommended

1. It is recommended that the boiler have Sentinel X100 added to the system to prevent damage to the boilers' heat exchanger. See Replacement Parts section at the end of this manual for re-ordering information.
2. After filling the system as directed in these instructions, use a caulking gun to inject the X100 inhibitor concentrate into the system, or fill with the X100 in its liquid form, following the instructions on the tube or container.

Startup — fill the system *(continued)*

⚠WARNING FREEZE PROTECTION *(when used)*

Follow these guidelines to prevent possibility of severe personal injury, death or substantial property damage:

- **NEVER use automotive or standard glycol antifreeze, even glycol made for hydronic systems.** Use only freeze-prevention fluids recommended by Weil-McLain for application in ***SVF***™ Boiler systems.
- **Thoroughly flush any system that has used glycol** before installing the new ***SVF***™ boiler.
- **Review the material safety data sheet (MSDS)** for the fluid used with the boiler owner and leave a copy for reference. The MSDS contains information on potential hazards and first aid procedures for exposure or ingestion.
- **Check antifreeze inhibitor level at least annually.** Glycol concentration and inhibitor levels may change over time. Add antifreeze to increase concentration if necessary. Add inhibitor as needed to bring to acceptable level, using inhibitor test kit to verify.
- When using freeze protection fluid with automatic fill, **install a water meter to monitor water make-up.** Freeze protection fluid may leak before the water begins to leak, causing concentration to drop, reducing the freeze protection level.
- **DO NOT exceed 50% antifreeze by volume.** Antifreeze moves more sluggishly than water and can interfere with heat transfer. At antifreeze concentrations higher than 50%, sludge can develop in the boiler, potentially causing damage to the heat exchanger.
- **Clean the system before filling.** Always drain and flush the system thoroughly before filling with antifreeze. Sludge, iron oxide deposits and other sediment in the system inhibit flow and can cause rapid breakdown of inhibitors.
- Use only antifreeze recommended by Weil-McLain.

NOTICE Weil-McLain provides information for application of the antifreeze products listed in this document only for use in Weil-McLain ***SVF***™ boilers. Do not apply these products or instructions for other applications. Local codes may require a backflow preventer or actual disconnection from city water supply.

3. After adding the inhibitor to the system, allow time for the water to circulate and mix. Then check the inhibitor level. Add additional inhibitor if necessary.
4. See separate instructions or Weil-McLain website for suggested guidelines to determine how much inhibitor to use.

Purge air from water system

1. Connect a hose to the purge valve (see purge/drain valves shown in piping diagrams beginning on page 16). Route the hose to an area where water can drain and be seen.
2. Close the boiler or system isolation valve between the purge valve and fill connection to the system.
3. Close zone isolation valves.
4. Open quick-fill valve on cold water make-up line.
5. Open purge valve.
6. One zone at a time, open the isolation valves. Allow water to run through the zone, pushing out the air. Run until no noticeable air flow is present. Close the zone isolation valves and proceed with the next zone. Follow this procedure until all zones are purged.
7. Close the quick-fill water valve and purge valve and remove the hose. Open all isolation valves. Watch that system pressure rises to correct cold-fill pressure.
8. After the system has operated for a while, eliminate any residual air by using the manual air vents located throughout the system.
9. If purge valves are not installed in system, open manual air vents in system one at a time, beginning with lowest floor. Close vent when water squirts out. Repeat with remaining vents.
10. Open automatic air vent (diaphragm-type or bladder-type expansion tank systems only) one turn.
11. Starting on the lowest floor, open air vents one at a time until water squirts out.
12. Repeat with remaining vents.
13. Refill to correct pressure.

Check/verify water chemistry

1. The system may have residual substances that could affect water chemistry.
2. After the system has been filled and leak tested, verify water pH and chloride concentrations are acceptable.
3. Verify antifreeze concentration, when used.
4. Follow the instructions on the Sentinel test kit to sample the system water and verify inhibitor concentration.

Check inhibitor and antifreeze concentrations annually

1. Test the pH of a sample of system water at least annually.
   a. The pH of the water mixture must be between 7.0 and 8.5.
   b. Or use the Sentinel inhibitor test kit to check concentration.
2. If pH is outside this range (or inhibitor test kit indicates low level), the inhibitor level may not be sufficient to prevent corrosion.
3. Test antifreeze concentration.

⚠WARNING Test antifreeze concentration at least annually. If concentration is low, add antifreeze or drain system and refill with correct mixture. Follow instructions on page 85 to determine amount of antifreeze needed.

4. Check inhibitor level after adjustments are made.

Startup — final checks

Check thermostat circuit(s)

1. Disconnect the two external wires connected to the boiler thermostat terminals (see instructions beginning on page 59 for terminal locations).
2. Connect a voltmeter across these two incoming wires. Close each thermostat, zone valve and relay in the external circuit one at a time and check the voltmeter reading across the incoming wires.

WARNING There should NEVER be a voltage reading. Applying voltage across the thermostat terminals will damage the control. If a voltage does occur under any condition, check and correct the external wiring. (This is a common problem when using 3-wire zone valves.)

3. Once the external thermostat circuit wiring is checked and corrected if necessary, reconnect the external thermostat circuit wires. Allow the boiler to cycle.

Inspect/fill condensate system

Inspect/check condensate lines and fittings

1. Inspect the condensate drain line and condensate trap. (See page 46 for component locations.)

Fill condensate trap with water

1. Fill the condensate trap with fresh water by removing, filling and re-installing onto heat exchanger condensate drain.
2. **To remove the trap**, see page 46 for information.

WARNING The condensate trap must have check float in place and be filled with water during all times of boiler operation to avoid flue gas emission from the condensate drain line. Failure to fill the trap could result in severe personal injury or death.

Inspect pressure switch hoses

WARNING The pressure switch sense lines must be in good condition and firmly attached to the correct locations. Incorrect placement or disconnected sense lines can result in unreliable boiler operation.

1. Inspect all pressure switch sense hoses and verify that they are correctly installed (Figure 78). Replace if necessary.
2. Inspect and verify attachment of the plastic gas valve/venturi reference line (Figure 87, page 96). Replace if necessary.

Final checks before starting boiler

- ❑ Read the instructions to adjust and set up the control module. Verify that all settings have been made correctly.
- ❑ Verify that the boiler and system are full of water and all system components are correctly set for operation.
- ❑ Vent any remaining air from system using manual vents. Air in the system will interfere with circulation and cause heat distribution problems and noise. Check system piping for leaks. If found, shut down boiler and repair immediately.

WARNING **Eliminate all system leaks**. Continual fresh make-up water will reduce boiler life. Minerals can build up in sections, reducing heat transfer, overheating heat exchanger, and causing heat exchanger failure.

- ❑ Fill condensate trap with water (see above for procedure).
- ❑ Verify electrical connections are correct and securely attached.

Figure 78 Pressure switch tube locations

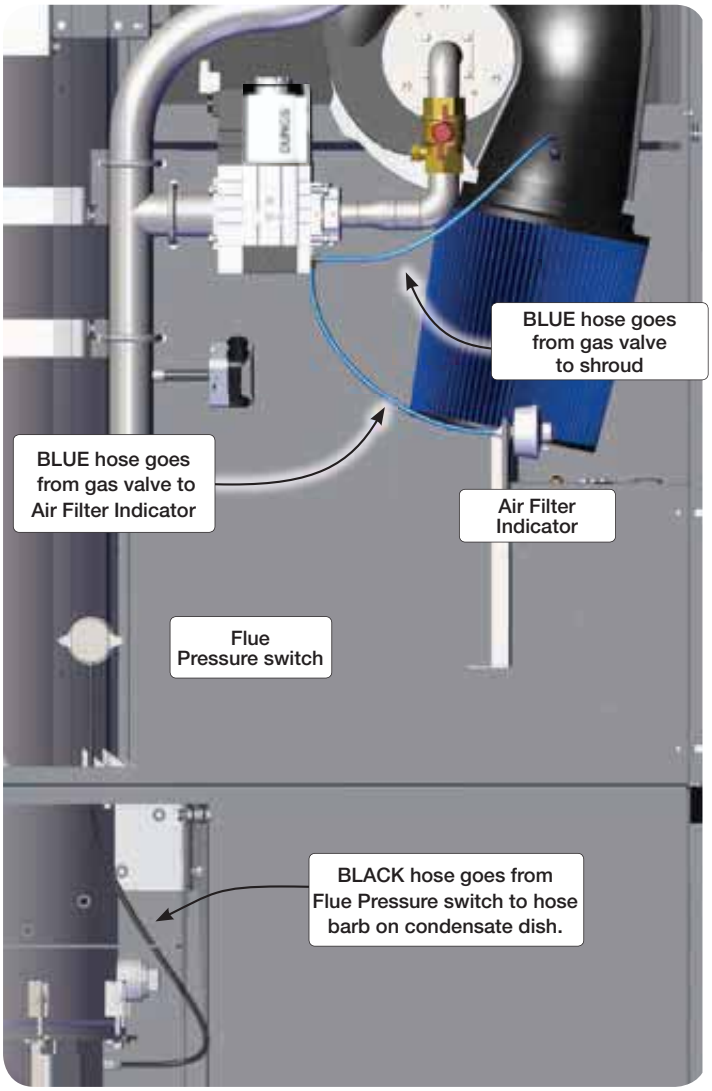

- ❑ Inspect vent piping and air piping (direct vent systems) for signs of deterioration from corrosion, physical damage or sagging. Verify vent piping and air piping are intact and correctly installed per this manual.

WARNING Venting system must be sealed gas-tight to prevent flue gas spillage and carbon monoxide emissions which will result in severe personal injury or death.

WARNING Before starting the boiler, and during initial operation, use a leak detector or smell near the floor and around the boiler for gas odorant or any unusual odor. Remove boiler access door and smell interior of boiler enclosure. Do not proceed with startup if there is any indication of a gas leak. Repair any leak at once.

If you discover evidence of any gas leak during operation, shut down the boiler at once. Find the leak source with bubble test and repair immediately. Do not start boiler again until corrected. Failure to comply could result in severe personal injury, death or substantial property damage.

Startup procedure

Figure 79 Blower speed — required settings (High altitude means installations above 5,500 feet)

Natural Gas						
Boiler	Low fire		Ignition		High fire	
	Factory setting	High altitude	Factory setting	High altitude	96% of Max. setting	Max. setting
	(rpm)	(rpm)	(rpm)	(rpm)	(rpm)	(rpm)
SVF 1500	800	1060	2300	2800	3471	3600
SVF 2000	800	1060	2300	2800	4469	4640
SVF 2500	1000	1360	3100	3800	5486	5700
SVF 3000	1000	1360	3100	3800	6256	6500

Propane Gas						
Boiler	Low fire		Ignition		High fire	
	Factory setting	High altitude	Factory setting	High altitude	96% of Max. setting	Max. setting
	(rpm)	(rpm)	(rpm)	(rpm)	(rpm)	(rpm)
SVF 1500	1000	1360	2300	2800	3385	3500
SVF 2000	1000	1360	2300	2800	4344	4500
SVF 2500	1000	1360	3100	3800	5391	5600
SVF 3000	1000	1360	3100	3800	6160	6400

NOTICE In the USA Input rates are derated 4% for each 1000 ft. above sea level, beyond 2000 ft. in accordance with National Fuel Gas Code, ANSI Z223.1/NFPA 54 – latest edition, and/or the Natural Gas and Propane Installation Code, CAN/CSA B149.1.

WARNING For elevations above 10,000 feet, please contact Weil-McLain Technical Support for details.

NOTICE In Canada, Input rates are derated 10% for altitudes of 2000 ft. to 4500 ft. above sea level. Please use appropriate Fan Speed Settings for High Altitude provided in this manual.

In Canada for elevation beyond 4500 feet. Please consult Provincial Authorities having jurisdiction and/or local codes.

To start the boiler

1. Turn OFF the boiler ON/OFF switch.
2. Read and follow the Operating Instructions, Figure 83, page 91.
3. The control will initialize and follow its sequence of operation (see page 68).

If boiler does not start correctly

1. Check for loose connections, blown fuse or service switch off?
2. Is external limit control (if used) open? Is boiler water temperature above 210 °F?
3. Is thermostat set below room temperature?
4. Is gas turned on at meter or boiler?
5. Is incoming gas pressure greater or less than required on page 47?
6. Are parameters set correctly as per this manual?
7. Is the warm weather shutdown activated?
8. If none of the above corrects the problem, refer to Troubleshooting, beginning on page 99.

Check flame & combustion with instruments

1. Initiate a call for heat on one of the heat demand inputs.
2. Access the control contractor menus by pressing the up and down arrow keys for seven seconds.
3. Use the control display to navigate DIAGNOSTICS to Manual Test Mode (see for 2 more years
4. Remove the flue temperature sensor and install a ¼" BSP hose barb and hose. Insert a combustion test probe into the hose, using a calibrated combustion test instrument.
5. Test for CO_2 (or O_2) and for CO. The CO_2 values are listed in Figure 80, page 89. If results are NOT acceptable, follow the instructions under "Gas Valve Adjustment Procedure" to set the CO_2 values. See WARNING below.

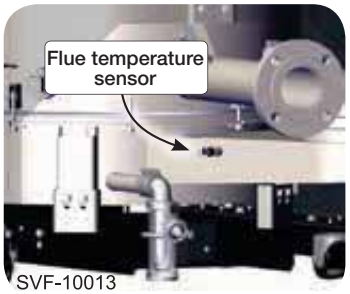

WARNING You must re-install the flue temperature sensor to prevent flue gas spillage into the boiler room. Failure to comply could result in severe personal injury, death or substantial property damage.

Gas valve adjustment procedure

WARNING DO NOT attempt to adjust the gas valve settings unless you are a qualified technician, and with the use of calibrated combustion test instruments. Adjust the valve settings only as needed to meet the combustion values given in Figure 80, page 89.

WARNING *SVF* boilers are shipped ready to fire natural gas ONLY. You must install the propane conversion kit if the boiler will be connected to propane. See page 12 for instructions. Failure to comply could result in severe personal injury, death or substantial property damage.

1. This procedure is only necessary when combustion tests indicate the need, as explained under "**Check flame & combustion with instruments**, page 88."
2. Boiler behavior that might indicate a need to check combustion values at high fire (as per page 88) to verify boiler is in adjustment include: difficulty igniting, poor flame stability at low fire, combustion noise or high carbon monoxide values.
3. Combustion readings must be taken at both high fire and low fire.

Adjust valve at high fire

Use the control display to navigate to Manual Test Mode. (See page 98 for proper instructions on forcing rates in Manual Test Mode). After the boiler has had time to stabilize and high-fire RPM value (see Figure 79) is reached, take a CO_2 reading.

a. See Figure 81, page 89 to adjust if necessary.
b. If the CO_2 is HIGH, turn the throttle screw towards the minus (-) sign with a small flat screwdriver to lower the input. Allow the boiler to stabilize and take another reading. Continue until the desired CO_2 value is achieved.

NOTICE Make only small (1/8 -turn) throttle screw adjustments. Adjustment can be sensitive, especially on propane. Navigate to DIAGNOSTICS — Manual Test Mode (see page 98 for proper instructions on testing).

c. If the CO_2 is LOW, turn the throttle screw towards the plus (+) sign with a small flat screwdriver to increase the input. Allow the boiler to stabilize and take another reading. Continue until the desired CO_2 value is achieved.

Startup procedure *(continued)*

WARNING If combustion at either high or low fire is outside the range given in Figure 80, follow the procedure given for adjusting the throttle screw on the gas valve. If throttle screw adjustment does not correct the problem, then shut down the boiler and contact your local Weil-McLain representative. Throttle screw adjustment must be done only by a qualified technician, using calibrated test instruments. Failure to comply could result in severe personal injury, death or substantial property damage.

Figure 80 Acceptable CO_2 and CO values

Natural Gas				
Boiler	High fire		Low fire	
	$\%CO_2$ Note 1	CO ppm	$\%CO_2$ Note 2	CO ppm
SVF 1500	9.00	< 60	8.75	< 60
SVF 2000	9.00	< 60	8.75	< 60
SVF 2500	9.00	< 60	8.75	< 60
SVF 3000	9.00	< 60	8.75	< 60
Note 1	The high fire CO_2 listed is typical. The value may vary with conditions, but must not be lower than 8.0% nor higher than 10.0%.			
Note 2	The low fire CO_2 listed is typical. The value may vary with conditions, but must not be lower than 7.75% and be at least 0.25% less than the high fire CO_2.			
Propane Gas				
Boiler	High fire		Low fire	
	$\%CO_2$ Note 1	CO ppm	$\%CO_2$ Note 2	CO ppm
SVF 1500	10.50	< 60	9.75	< 60
SVF 2000	10.50	< 60	9.75	< 60
SVF 2500	10. 50	< 60	9.75	< 60
SVF 3000	10.50	< 60	9.75	< 60
Note 1	The high fire CO_2 listed is typical. The value may vary with conditions, but must not be lower than 9.50% nor higher than 11.0%.			
Note 2	The low fire CO_2 listed is typical. The value may vary with conditions, but must not be lower than 9.00% and be at least 0.75% less than the high fire CO_2.			

Adjust valve at low fire

1. Lock the boiler into low fire using the control. Verify that the blower rpm value is correct for Low fire (see Figure 79, page 88) as displayed on the Manual Test Mode screen.
2. Check the combustion readings.

Figure 81 Gas valve adjustment locations ***(ONLY for use by a qualified technician, using calibrated combustion test instruments)***

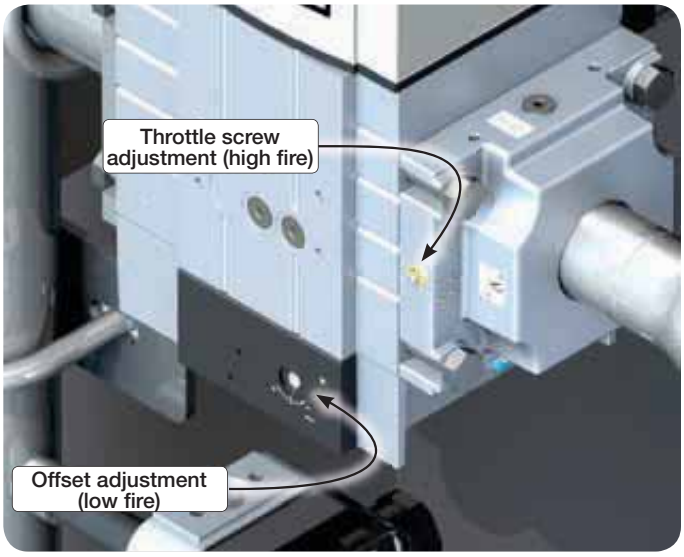

3. If results are acceptable at low fire (as listed Figure 81, page 89), verify high fire readings again. Restore firing rate to AUTO .
4. If combustion results are not acceptable, ensure the boiler is locked into low in Manual Test Mode and use a 2.5mm Allen wrench to adjust the offset setting. Rotate towards the plus + to increase CO_2, rotate towards the minus – to decrease CO_2. Rotate 1/2 turn and then back 1/4 for adjustments.
5. After adjustment set control back to high to verify High fire CO_2 is correct. Adjust if needed.
6. Proceed back to Low fire to verify CO_2 is correct. Adjust if needed.
7. Repeat Steps 5 and 6 until both High fire and Low fire meet the requirements of Figure 80. Restore Firing Rate to Auto.
8. Consult your local Weil-McLain representative if acceptable results cannot be obtained for both high and low fire.

Adjust and test boiler controls

Follow instructions in this manual to set and verify operation of the boiler controls.

Check ignition system safety shutoff device

1. After the boiler has been installed, turn off the boiler.
2. Shut off the manual gas valve located down stream of gas valve to stop flow of fuel to the boiler.
3. Turn on the boiler. It will start the ignition sequence, but will not light. After some time, the boiler will lockout, the display screen will turn red, and the Control will flash "Ignition Fault". It means that the boiler tried to ignite without success. The number of tries before Lockout is in accordance with ASME CSD-1 – latest edition. ***SVF*** 1500/2000/2500 = One (1) retry, ***SVF*** 3000 =Failure and Lockout. This means that the ignition system safety device worked properly.
4. Clear the Lockout condition by selecting "Manual Reset" in the Diagnostic Menu.
5. Open the manual gas valve located down stream of gas valve to resume fuel supply to the boiler.

Startup procedure *(continued)*

Figure 82 Gas valve test pressure tapping

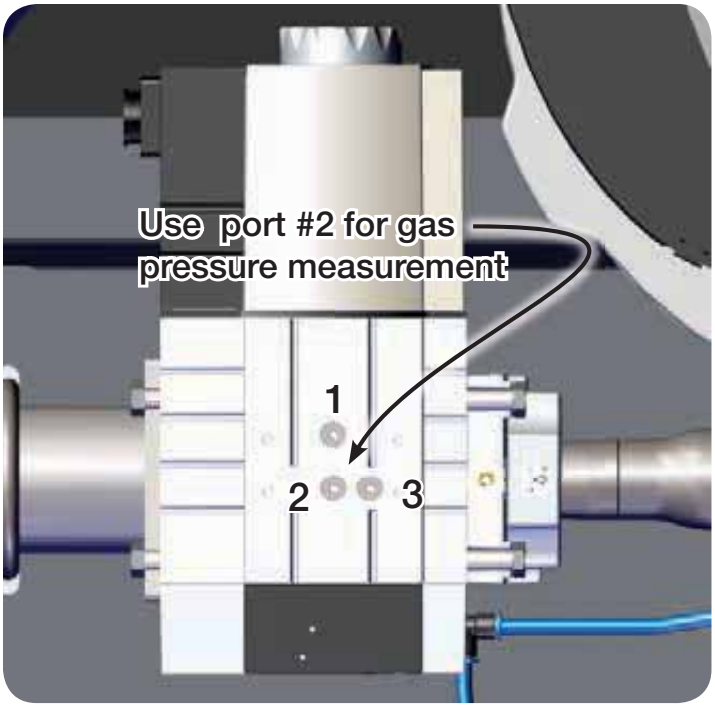

Gas valve leakage testing

WARNING DO NOT connect a manometer to the manual gas valve or the automatic gas valve. The high vacuum from the blower could pull fluid into the gas line, possibly damaging the gas valves.

1. Refer to the gas valve manufacturer's instructions for the procedure to test the valve.
2. To operate the two valve solenoids independently, navigate to the Gas Valve Test Screen on the Control (see Figure 62, page 71 for access sequence).
3. When in the Gas Valve Test Screen, you will see two options:
   a. Open Gas Valve 1
   b. Open Gas Valve 2
4. To open only gas valve 1, highlight it and press enter/save.
5. While still in the Gas Valve test screen, give the boiler a call for heat. The boiler will go through it's normal Ignition sequence, but will only open Gas Valve 1.
6. After gas valve 1 has opened, end the call for heat.
7. This procedure can be repeated by selecting and entering Open Gas Valve 2.
8. After the testing is complete and the call for heat has been removed, use the back button to exit the Gas Valve Test Screen. This will then reset the control to open both Gas Valves for any call for heat.

Verification check list

- ❑ Verified that the control is programmed correctly?
- ❑ Verified that boiler and heat distribution units filled with water?
- ❑ Verified water chemistry per page 85?
- ❑ Automatic air vents, if used, opened one full turn?
- ❑ Air purged from system?
- ❑ Air purged from gas piping? Piping checked for leaks?
- ❑ Filled condensate trap with water?
- ❑ Thermostat circuit wiring checked to ensure there are no stray voltages?
- ❑ Followed Operating Instructions, Figure 83, page 91.
- ❑ Burner flame and combustion verified per page 88?
- ❑ Verified control operation for space heating and DHW (if used) per this manual?
- ❑ Tested additional field-installed controls? Verified controls cause automatic reset or manual reset lockout as desired.
- ❑ Set additional field-installed limit control(s) to system temperature requirements?
- ❑ Adjusted balancing valves and controls to provide design temperature to system?
- ❑ For multiple zones, adjusted for correct flow in each zone?
- ❑ Verified thermostat heat anticipator (if available) set properly (see page 53 for requirements)?
- ❑ Cycled boiler with thermostat (and with DHW aquastat, if installed) — Raised to highest setting and verified boiler goes through normal startup cycle? Lowered to lowest setting and verified boiler goes off?
- ❑ Measured natural gas input?
- ❑ Checked incoming gas pressure as specified on page 47.
- ❑ Observed several operating cycles for proper operation.
- ❑ Set room thermostat to desired room temperature and DHW
  aquastat, if installed, to desired DHW storage temperature)?
- ❑ Reviewed all instructions shipped with this boiler with owner or maintenance person?
- ❑ Filled in **Installation certificate** on page 121?
- ❑ Filled out the warranty registration card and send to Weil-McLain?
- ❑ Return instructions to envelope and give to owner or placed inside boiler housing. Instructions must be available for all service and adjustment of the boiler.

Startup procedure *(continued)*

Figure 83 Operating instructions (WARNING — Verify that the control is set correctly before proceeding.)

FOR YOUR SAFETY READ BEFORE OPERATING

WARNING **If you do not follow these instructions exactly, a fire or explosion may result causing property damage, personal injury or loss of life.**

A. This appliance does not have a pilot. It is equipped with an ignition device which automatically lights the burner. Do not try to light the burner by hand.

B. Before OPERATING, smell all around the appliance area for gas. Be sure to smell next to the floor because some gas is heavier than air and will settle on the floor. See below.

C. Use only your hand to turn the gas valve handle. Never use tools. If the handle will not turn by hand, don't try to repair it, call a qualified service technician. Force or attempted repair may result in a fire or explosion.

D. Do not use this appliance if any part has been under water. Immediately call a qualified service technician to inspect the appliance and to replace any part of the control system and any gas control, which has been under water.

WHAT TO DO IF YOU SMELL GAS

- Do not try to light any appliance.
- Do not touch any electric switch; do not use any phone in your building.
- Immediately call your gas supplier from a neighbor's phone. Follow the gas supplier's instructions.
- If you cannot reach your gas supplier, call the fire department.

OPERATING INSTRUCTIONS

1. Stop! Read the safety information at left on this label. This appliance is equipped with an ignition device which automatically lights the burner. Do not try to light the burner by hand.
2. Set room thermostat(s) to lowest setting. Verify external manual gas cock is open (valve handle parallel to gas piping).
3. Turn OFF all electrical power to the appliance.
4. Remove boiler access door.
5. Turn boiler manual gas valve handle counterclockwise ↶ to open gas supply.
6. Wait five (5) minutes to clear out any gas. Then smell for gas, including near the floor. If you smell gas, STOP! Follow "B" in the safety information to the left. If you don't smell gas, go to the next step.
7. Turn ON all electrical power to the appliance.
8. Set thermostat(s) to desired setting.
9. The display will show symbols and text describing the status of the boiler as it proceeds through its operating sequence.
10. If the appliance will not operate when there is a call for heat and piping is not hot, follow the instructions "To Turn Off Gas To Appliance" below and call your service technician or gas supplier.

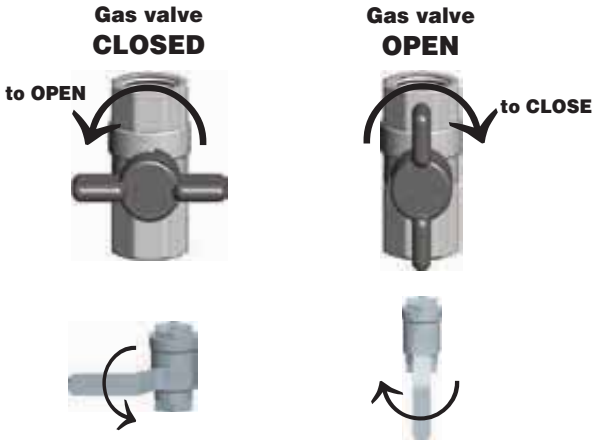

11. Reinstall boiler access door. Make sure panel is seated firmly in place.

TO TURN OFF GAS TO THE APPLIANCE

1. Set room thermostats to lowest setting.
2. Turn OFF all electrical power to the appliance.
3. Close external manual gas cock (valve handle perpendicular to gas piping). Remove boiler access door. Turn boiler manual gas valve handle clockwise ↷ to close gas supply.
4. Reinstall boiler access door.

550-101-262 (0218)

Annual startup and maintenance schedule

Figure 84 Service and maintenance schedules

Service technician (see following pages for instructions)		Owner maintenance (see User's Information Manual for instructions)	
ANNUAL START-UP (See First-year special inspection)	**General:** Investigate reported problems. Inspect air inlet box screen; clean and vacuum if necessary; WARNING — no solvents. Clean base collector and condensate trap and fill with fresh water. Check for leaks (water, gas, flue, condensate). Check system water chemistry, inhibitor level and antifreeze concentration, if used. Check boiler relief valve. Verify flue and air lines in good condition and sealed tight. Verify operation of combustion air damper, if used. Check system water pressure/system piping/ expansion tank. Ignition electrode and flame sense rods (inspect, clean and check spacings). Ignition and ground wiring. Check control function/settings: • High gas pressure switch • Low gas pressure switch • Low water cut off • Operating and high limits Wiring and connections. Perform startup checkout and performance verification beginning with Startup — fill the system, page 85. Flame inspection (stable, uniform). Flame signal. Clean heat exchanger if flue temp is more than 30°F above return water temp. Check blower speed settings. **Additional if combustion or performance indicate need:** Clean heat exchanger. Remove and clean burner using compressed air only. Vacuum the blower. **Review:** Review with owner.	**Daily**	• Check boiler area. • Check air openings. • Check pressure/temperature gauge.
		Monthly	• Check vent piping. • Check air piping. • Check relief valve. • Check condensate drain system. • Check air vents).
		Periodically	• Test low water cutoff by pressing test button. • Check air filter by reviewing the vacuum gage.
		Every 6 months	• Check boiler piping (gas and water). • Operate relief valve.
		End of season	• Shut boiler down (unless boiler used for domestic water).

WARNING Follow the service and maintenance procedures given throughout this manual and in component literature shipped with the boiler. Failure to perform the service and maintenance could result in damage to the boiler or system. Failure to follow the directions in this manual and component literature could result in severe personal injury, death or substantial property damage.

Annual startup

HANDLING CERAMIC FIBER MATERIALS

Removal of sight glass gasket and burner insulation/gasket.

WARNING The sight glass gasket in this product contains ceramic fiber materials that have been identified as carcinogenic, or possibly carcinogenic, to humans. Ceramic fibers can be converted to cristobalite in very high temperature applications. The International Agency for Research on Cancer (IARC) has concluded, "Crystalline silica inhaled in the form of quartz or cristobalite from occupational sources is carcinogenic to humans (Group 1).":

- ❑ Avoid breathing dust and contact with skin and eyes.
  - Use NIOSH certified dust respirator (N95). This type of respirator is based on the OSHA requirements for cristobalite at the time this document was written. Other types of respirators may be needed depending on the job site conditions. Current NIOSH recommendations can be found on the NIOSH web site at http://www.cdc.gov/niosh/homepage.html. NIOSH approved respirators, manufacturers, and phone numbers are also listed on this web site.
  - Wear long-sleeved, loose fitting clothing, gloves, and eye protection.
- ❑ Apply enough water to the sight glass gasket to prevent airborne dust.
- ❑ Remove sight glass gasket from the boiler and place it in a plastic bag for disposal.
- ❑ Wash potentially contaminated clothes separately from other clothing. Rinse clothes washer thoroughly.

NIOSH stated First Aid

- ❑ Eye: Irrigate immediately.
- ❑ Breathing: Fresh air.

FIRST-YEAR SPECIAL INSPECTION

1. **No later than 12 months** after the boiler is installed, perform a first-year inspection of the boiler. This must include the following **in addition to routine annual start-up procedures**.
   a. Loosen bolts and hinge of the burner/heat exchanger cover plate. Inspect the heat exchanger and clean if necessary. See instructions for rotating the burner/heat exchanger cover plate, and for cleaning the heat exchanger, in the Maintenance section of this manual.
   b. Make sure the burner is clean.
   c. Make sure the burner gasket is in good condition. Replace if necessary.
   d. Disconnect condensate trap and drain lines. Inspect, then flush thoroughly.
2. Determine follow-up maintenance and service needs based on the condition of the heat exchanger and condensate lines.
   a. If the heat exchanger shows substantial fouling, or if condensate lines show accumulation of sediment, schedule a follow-up service call to perform the first-year inspection again, sooner than the normal twelve months between.
   b. Heavy fouling of the exchanger or condensate lines indicates possible combustion air contamination. Inspect the air intake area carefully, and remove possible contaminants. See " Corrosive contaminants and sources," Figure 21, page 26, for products to avoid.

WARNING You must eliminate causes of corrosion and contamination to ensure reliable operation of the boiler and system.

Annual startup *(continued)*

WARNING The boiler should be inspected and started annually, at the beginning of the heating season, only by a qualified service technician.

In addition, the maintenance and care of the boiler designated in Figure 84, page 92 and explained on the following pages must be performed to assure maximum boiler efficiency and reliability. Failure to service and maintain the boiler and system could result in equipment failure.

WARNING Electrical shock hazard — Turn off power to the boiler before any service operation on the boiler except as noted otherwise in this instruction manual. Failure to turn off electrical power could result in electrical shock, causing severe personal injury or death.

WARNING Do not use solvents to clean any of the boiler components. The components could be damaged, resulting in unreliable or unsafe operation.

Address reported problems

1. Inspect any problems reported by owner and correct before proceeding.

Inspect boiler area

1. Verify that boiler area is free of any combustible materials, gasoline and other flammable vapors and liquids.
2. Verify that air intake area is free of any of the contaminants listed on page 26 of this manual. If any of these are present in the boiler intake air vicinity, they must be removed. If they cannot be removed, reinstall the air and vent lines per this manual.

Clean the condensate trap

1. Inspect the condensate trap. If the trap has debris accumulated, remove the trap and clean.
2. To remove, see page 46 for information.
3. Loosen the condensate trap inlet connection and flush as needed.
4. Ensure the condensate inlet connection gasket is in place, then tighten condensate trap inlet connection securely by hand.

WARNING The condensate trap float MUST be in place in the condensate trap assembly to prevent possible flue gas leakage through the condensate drain system.

5. To install, see page 46 for information.
6. Verify that all the connections are made with no leaks to complete installation.

Check all piping for leaks

WARNING Eliminate all system or boiler leaks. Continual fresh make-up water will reduce boiler life. Minerals can build up reducing heat transfer, overheating the heat exchanger, and causing heat exchanger failure. Leaking water may also cause severe property damage.

1. Inspect all water and gas piping and verify to be leak free.
2. Look for signs of leaking lines and correct any problems found.
3. Check gas line using procedure on page 47.

Check air openings

1. Verify that combustion and ventilation air openings to the boiler room and/or building are open and unobstructed. Check operation and wiring of automatic combustion air dampers, if used.
2. Verify that boiler vent discharge and air intake are clean and free of obstructions.

WARNING Failure to install the combustion air damper could result in nuisance shut downs or substantial property damage

Flue vent system and combustion air piping

1. Visually inspect entire flue gas venting system (and air piping, if installed) for blockage, deterioration or leakage. Repair any joints that show signs of leakage in accordance with vent manufacturer's instructions. When air is ducted to boiler, verify that air inlet pipe is connected and properly sealed.

WARNING Failure to inspect for the above conditions and have them repaired can result in severe personal injury or death.

Check water system

1. Verify all system components are correctly installed and operational.
2. Check the cold fill pressure for the system. Verify it is correct (usually around 12 psig). Reference Minimum Pressure on page 15.
3. Watch the system pressure as the boiler heats up (during testing) to ensure pressure doesn't rise too high. Excessive pressure rise indicates expansion tank sizing or performance problem.
4. Inspect automatic air vents and air separators. Remove air vent caps and briefly press push valve to flush vent. Reinstall caps. Make sure vents do not leak. Replace any leaking vents.
5. Check system water chemistry (inhibitor concentration, pH and hardness). See page 85.

Check boiler relief valve

1. Inspect the relief valve and lift the lever to verify flow as in the following warnings, excerpted from a relief valve manufacturer's warning label. Before operating any relief valve, ensure that it is piped with its discharge in a safe area to avoid severe scald potential. Read manual section 3, page 12, before proceeding further.
2. If the relief valve weeps or will not seat properly, replace the relief valve. Ensure that the reason for relief valve weeping is the valve and not over-pressurization of the system due to expansion tank waterlogging or under-sizing.

WARNING Safety relief valves should be reinspected AT LEAST ONCE EVERY THREE YEARS, by a licensed plumbing contractor or authorized inspection agency, to ensure that the product has not been affected by corrosive water conditions and to ensure that the valve and discharge line have not been altered or tampered with illegally. Certain naturally occurring conditions may corrode the valve or its components over time, rendering the valve inoperative. Such conditions are not detectable unless the valve and its components are physically removed and inspected. This inspection must only be conducted by a plumbing contractor or authorized inspection agency — not by the owner. Failure to reinspect the boiler relief valve as directed could result in unsafe pressure buildup, which can result in severe personal injury, death or substantial property damage.

Annual startup *(continued)*

WARNING Following installation, the valve lever must be operated AT LEAST ONCE A YEAR to ensure that waterways are clear. Certain naturally occurring mineral deposits may adhere to the valve, rendering it inoperative. When manually operating the lever, water will discharge and precautions must be taken to avoid contact with hot water and to avoid water damage. Before operating lever, check to see that a discharge line is connected to this valve directing the flow of hot water from the valve to a proper place of disposal. Otherwise severe personal injury may result. If no water flows, valve is inoperative. Shut down boiler until a new relief valve has been installed.

Check expansion tank

1. Expansion tanks provide space for water to move in and out as the heating system water expands due to temperature increase or contracts as the water cools. Tanks may be open, closed or diaphragm or bladder type. See section 3 of this manual for suggested best location of expansion tanks and air eliminators.
   - Open-type — located above highest radiator or baseboard unit, usually in the attic or closet. Has a gauge glass and overflow pipe to a drain.
   - Closed-type — welded gas tight and located above boiler. Tank is partially filled with water, leaving an air cushion for expansion.
     - Make sure this type of tank is fitted with a tank fitting, such as the B & G Tank-Trol or Taco Taco-Trol. This fitting reduces gravity circulation of air-saturated tank water back to the system and prevents the air from bubbling up through the water as it returns from the system.
     - Do not use automatic air vents in systems with closed-type tanks. The air will escape from the system instead of returning to the tank. Eventually, the tank will waterlog and no longer control pressurization. The boiler relief valve will weep frequently.
   - **Diaphragm- or bladder-type** — welded gas tight with a rubber membrane to separate the tank pressurizing air and the water. May be located at any point in the system, but most often found near the boiler.
     - Systems with this type of expansion tank require at least one automatic air vent, preferably located on top of an air eliminator, as shown in examples in this manual.
2. If relief valve has tended to weep frequently, the expansion tank may be waterlogged or undersized.
   - **Closed-type tank — tank is most likely waterlogged. Install a tank fitting if** not already installed. Then check fill level per fitting manufacturer's instructions. If fill level is correct, check tank size against manufacturer's instructions. Replace with a larger tank if necessary.
   - **Diaphragm- or bladder-type** — first, check tank size to be sure it is large enough for the system. If size is too small, add additional tank (or tanks) as necessary to provide sufficient expansion. If tank size is large enough, remove tank from system and check charge pressure (usually 12 psig for residential applications). If tank won't hold pressure, membrane has been damaged. Replace tank.

Inspect ignition electrode / flame sense rod

1. Remove the ignition electrode from the boiler combustion chamber. See Figure 85.
2. Remove any white oxides accumulated on the ignition electrode and flame sense rod using steel wool. If the ignition electrode cannot be cleaned satisfactorily, replace ignitor with a new one.
3. Flame sense rod is longer than the ignition electrode.
4. Replace gasket if necessary.
5. Reinstall ignition electrode, making sure gasket is in good condition and correctly positioned.
6. Make sure the ignition electrode ground wire is attached to spade connection.
7. Inspect the flame sense rod harness and connections. Replace if necessary.

NOTICE ***SVF*** 1500/2000 – Male spade for flame sense.
SVF 2500/3000 – Female spade for flame sense.

WARNING Failure to use the correct ignition electrode/flame sense rod assembly may result in severe personal injury, death or substantial property damage

Figure 85 Ignition electrode / flame sense rod – ***SVF*** 2500/3000 shown

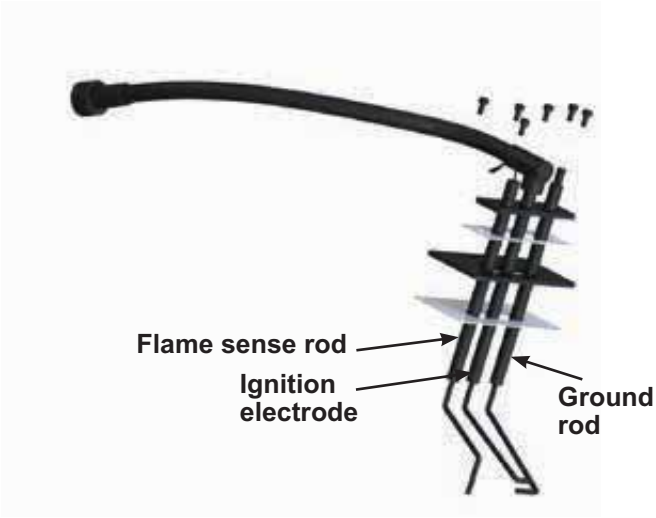

Figure 86 Correct orientation of ignition electrode / flame sense rod sight glass in down position.

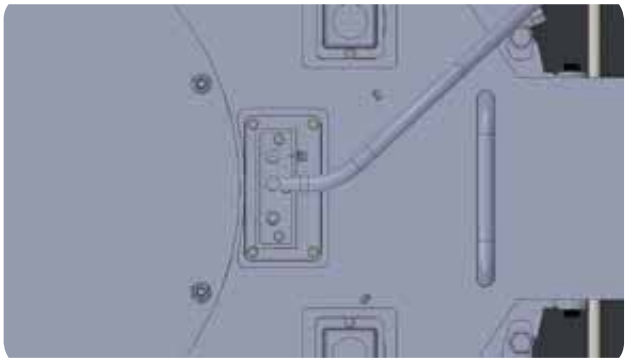

WARNING The ignition electrode must be sealed gas-tight to prevent flue gas spillage and carbon monoxide emissions which will result in severe personal injury or death.

Check ignition wiring

1. Check ignition cable electrical resistance. A good cable will have resistance between 900 and 1000 ohms. Replace if not acceptable.
2. Inspect boiler ground wire from ignition electrode to ground terminal strip.
3. Verify all wiring is in good condition and securely attached.
4. Check ground continuity of wiring using continuity meter.
5. Replace ground wires if results are not satisfactory.

Annual startup *(continued)*

Check all boiler wiring

Inspect all boiler wiring, making sure wires are in good condition and securely attached.

Check control settings

1. Use the display to navigate through all settings. Adjust settings if necessary.
2. Check settings of external limit controls (if any) and adjust if necessary.

Perform startup procedure per manual

Perform all startup procedures on pages 88 through 91.

Check burner flame

1. Inspect flame through the observation window using the procedure on page 88.
   a. The high fire flame should be blue and should be stable. The burner surface should be covered with orange dots.
   b. The low fire flame should be stable and evenly distributed over burner surface with a uniform orange color.
2. Perform the **Check flame & combustion with instruments,** procedure on page 88.
3. If the flame is unsatisfactory at either High fire or Low fire, either visually or the inability to adjust the combustion within the values shown in Figure 80. Turn off the boiler and allow the boiler to cool down.

To access the burner:

WARNING The boiler contains ceramic fiber materials. Use care when handling these materials per instructions on page 93 of this manual. Failure to comply could result in severe personal injury.

1. Shut off power to unit.
2. Close the external manual gas valve to ensure no gas flow to the unit.
3. Allow time for boiler to cool to room temperature if it has been firing.
4. Remove the top rear and middle panels
5. Remove the eight (8) M6 nuts securing the burner access plate with an 11mm socket or wrench
6. Lift the burner access plate straight up with the handle and set aside.
7. Inspect the burner access plate gasket. If damaged, replace with new.
8. Remove the eight (8) M6 nuts securing the burner with an 11mm socket or wrench.
9. Remove the burner.
   a. Carefully lift the burner by hand using the inside baffles.
   b. Avoid dragging the fiber mesh on any part of the boiler during removal.
10. Inspect the graphite burner gasket. If damaged, replace with new.

Figure 87 Observation windows

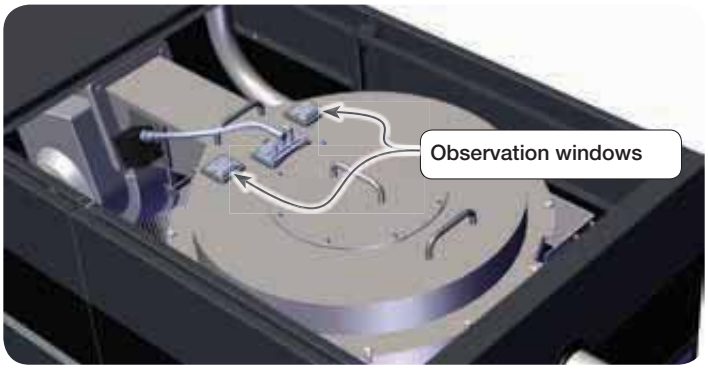

Figure 88 Access plate up for burner removal and replacement

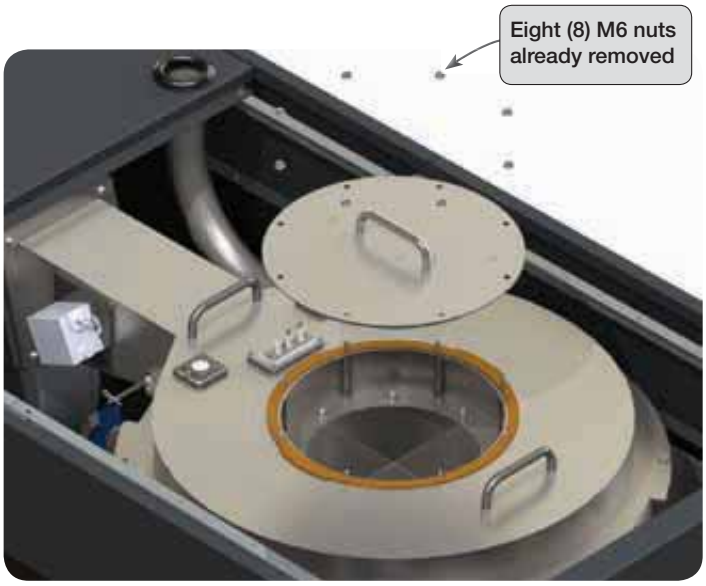

Figure 89 Burner removal and replacement position

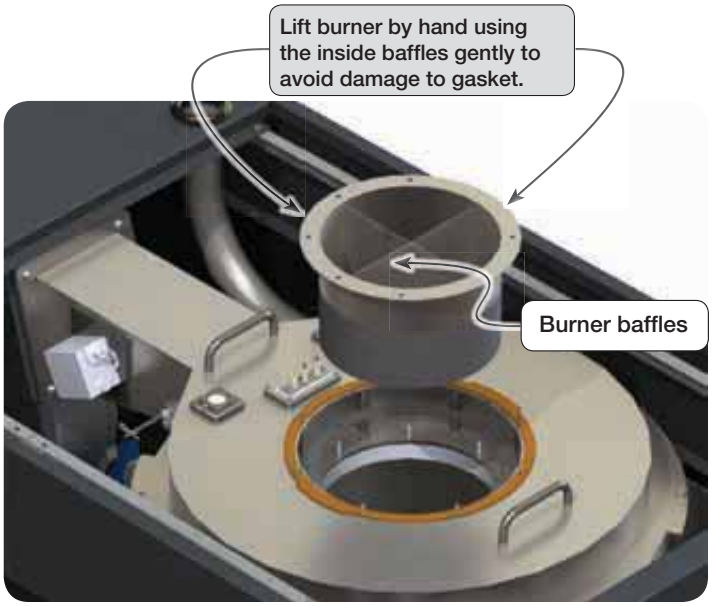

Annual startup *(continued)*

Figure 90 Burner access opening in heat exchanger

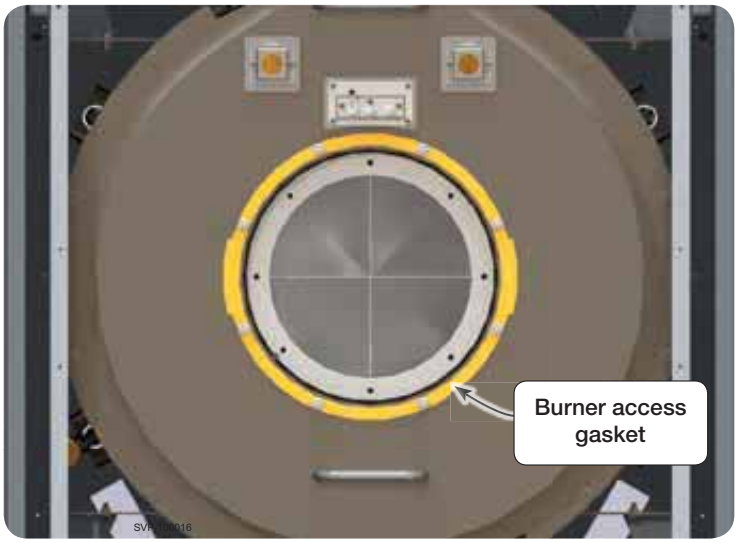

Figure 91 Burner plate (burner side) with gasket notching orientation shown

Figure 92 Burner and gasket with alignment orientation shown

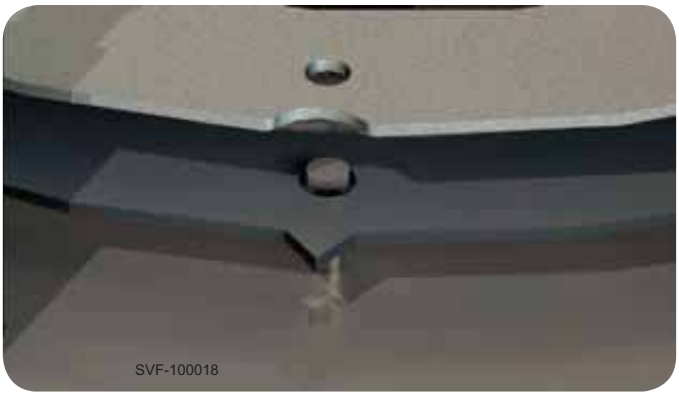

11. Clean the burner.
    a. Vacuum cleaner method – Vacuum the burner, being careful not to rub or scrape the fiber mesh.
    b. Water Flush – Water Only! – Rinse the burner down. Allow time to dry completely.
12. Reinstall the burner.
    a. The burner can only be installed one way. The inside baffles will be perpendicular and parallel to the boiler sides. See Figures 90 and Figure 92.
    b. Ensure the graphite burner gasket is in place before installing burner!

⚠WARNING The graphite burner gasket must be installed correctly. Failure to comply could result in severe personal injury, death or substantial property damage.

    c. Gradually tighten the eight (8) M6 nuts using a 11mm socket or wrench in the order shown on Figure 104, page 110 to a torque of 7.4 ft.-lbs.
13. Re-install the burner access plate
    a. Ensure the burner access plate gasket is in place before installing the plate!

⚠WARNING The burner access plate gasket must be installed correctly. Failure to comply could result in severe personal injury, death or substantial property damage.

    b. Ensure the gasket is aligned properly with the reliefs on the plate, see Figure 90.
    c. Gradually tighten the eight (8) M6 nuts using a 11mm socket or wrench in the order shown on Figure 104, page 110 to a torque of 7.4 ft-lbs.
14. Test the boiler, making sure the flame is acceptable after cleaning by using Startup Procedure on page 88.
15. If the Flame or Combustion valves are not acceptable. Shut down the boiler and replace the burner
16. Verify no leaks around the burner access plate.

Figure 93 Burner access plate reinstalled orientation shown

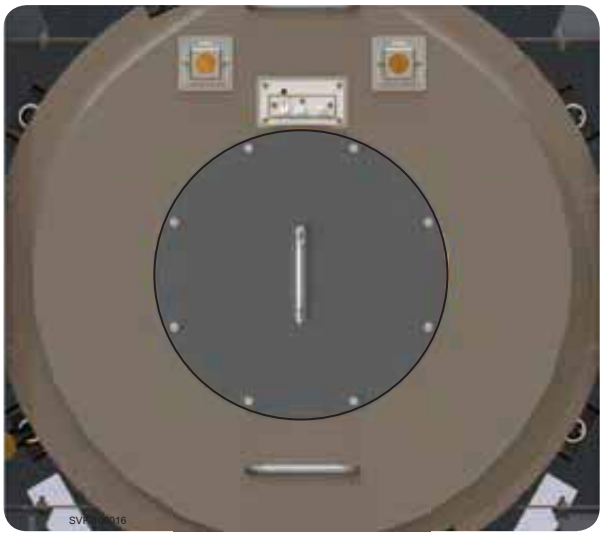

Annual startup *(continued)*

Check flame signal

The *Unity*™ Control has 3 distinct flame signal thresholds that it uses to operate the boiler safely and reliably.

- ***Boost:*** The highest flame signal threshold, when the flame signal drops below this value, the control take action to try and boost or increase the flame sense value by changing how the boiler is operating.
- ***Shutdown:*** This is the intermediate flame signal threshold, if the control senses a flame quality below this value, it will de-energize the gas valve extinguishing the flame. The boiler will then proceed through its normal operating process of purging and attempting another ignition if the demand is still active.
- ***Proof of Flame:*** The lowest flame signal threshold, this is the flame signal value that indicates there has been a successful ignition.

1. Navigate to Diagnostics/Inputs on the Control display (see Figure 72, page 79).
2. A lower flame signal may indicate a fouled ignitor or damaged ignitor insulation. If cleaning the ignitor does not improve, ground wiring is in good condition, and ground continuity is satisfactory, replace the ignitor.

NOTICE When the flame signal wire is routed within 3" of the ignition cable and the boiler is in an ignition sequence, the ignition cable may cause noise in the flame signal transmission resulting in a false flame signal value.

3. If flame signal still remains low, inspect the vent and air piping. Then inspect the heat exchanger, following the procedures given in this manual for removal and reinstallation of the heat exchanger cover plate and other boiler components. Clean the heat exchanger as described in this manual if necessary.

Figure 94 Flame signal shutdown values

Natural Gas			
Model	Boost	Shutdown	Proof of flame
SVF 1500	84	64	28
SVF 2000	84	64	28
SVF 2500	116	96	28
SVF 3000	116	96	28

Propane Gas			
Model	Boost	Shutdown	Proof of flame
SVF 1500	140	120	28
SVF 2000	140	120	28
SVF 2500	120	100	28
SVF 3000	120	100	28

Check flue gas temperature

1. Set the boiler to high fire. Then adjust the control module display to view flue gas temperature and boiler return temperature.
2. The flue gas temperature should be no more than 30°F higher than the boiler return temperature.
3. If the flue temperature is higher than this, shut down the boiler, allow to cool, and follow the procedure starting on page 108 to clean the heat exchanger.

Check blower speeds

1. For installations at altitudes above 5,500 feet, make sure the control is set up for high altitude in the boiler setup menu. The Control module automatically adjusts low fire and ignition rates to compensate for high altitude conditions.
2. For installations below 5,500 feet, DO NOT enable high altitude.
3. Use the Control display to navigate to Manual test mode (see Figure 73, page 80).
4. Set the firing rate to Low (low fire).
5. Write down the blower RPM value shown and compare to the value in the table in Figure 79, page 88. Low fire rate (and corresponding blower speed) is adjusted in the boiler setup menu.
6. Set the firing rate to MEDIUM (ignition rate).
7. Write down the blower RPM value. It should be within 200 RPM of the value listed in the table in Figure 79, page 88.
8. Set the firing rate to High (high fire).
9. Write down the blower RPM value. It should be within 200 RPM of the value given in the table in Figure 79, page 88.
10. If any of the values are outside the ranges listed in the previous steps, contact the factory for technical assistance.

Manual Test Mode for Single and Multiple Boilers

Single Boiler

1. Navigate to Manual Test Mode screen under DIAGNOSTICS menu.
2. Generate a call for heat and wait until the burner is lit, if not yet in operation.
3. Press ENTER and select the desired FORCE RATE. Rate will be forced to setting for 10 minutes.

Review with owner

1. Review the ***SVF***™ User's Information Manual with the owner.
2. Emphasize the following to the owner:
   a. Perform the maintenance schedule specified in the User's Information Manual.
   b. Call a licensed contractor should the boiler or system exhibit any unusual behavior.
   c. Follow the proper shutdown procedure.
   d. Schedule an annual startup at the beginning of the next heating season.

Troubleshooting

VERIFY PROPER OPERATION AFTER SERVICING.

CAUTION Before servicing and making connections . . . **ALWAYS TURN POWER OFF TO THE BOILER TO PREVENT ELECTRICAL SURGES, WHICH CAN DAMAGE BOILER COMPONENTS.**

NOTICE Before calling, always complete the "Gas Data Collection Sheet" (page 122).
Record the boiler size and Consumer Protection (CP) number (located on boiler top jacket panel, next to the air inlet connection).

WARNING **ELECTRICAL SHOCK HAZARD** — The boiler ON/OFF switch does not turn off all power to the boiler. **TURN OFF ALL POWER TO THE BOILER WHEN SERVICING**. Internal wiring is still powered when the switch is off.

CAUTION Label all wires prior to disconnection when servicing controls. Wiring errors can cause improper and dangerous operation. Always disconnect power to boiler before servicing. Failure to comply could result in severe personal injury, death or substantial property damage.

WARNING Never jumper (bypass) any device except for momentary testing. Severe personal injury, death or substantial property damage can result.

Before troubleshooting:

1. See Figure 95 for tools and kits recommended for troubleshooting boilers.
2. Single phase boilers, check for 120VAC (minimum 102VAC to maximum 132VAC) to boiler.
   Three phase boilers, check for 208VAC (minimum 176VAC to maximum 229VAC) to boiler.
3. Check the Control's last three lockout histories.
   a. See Figure 73, page 80 for access information.
   b. Scroll down to DIAGNOSTICS and press the enter key.
   c. Scroll down to PAST ERRORS and press the enter key.
   d. Record the first four data records and then highlight the history record you want to view.
   e. Follow information at the bottom of the screen to navigate through your lockout histories.

Figure 95 Tools and kits for troubleshooting

Tools needed	Purpose
#2 Phillips Screwdriver	Remove four (4) screws to remove the top front cover.
1/16" flat blade screwdriver	Used for wiring on terminal blocks. Used to adjust gas valve throttle. (High fire)
3/16" Allen Wrench	To remove gas valve pressure tap plugs.
5/16" Nut driver	To remove air filter, various panels and brackets.
7mm socket or wrench	To remove gas manifold from gas valve. To add orifice to change from natural to propane.
11mm socket or wrench	To remove the burner access plate and burner.

Tools needed	Purpose
2.5mm Allen wrench	To adjust gas valve offset. (Low fire)
13mm socket or wrench	To remove heat exchanger cover plate. To access combustion system, heat exchanger assembly and blower.
Multimeter	To take measurement readings on sensors and electrical components.
Manometer (Inclined or digital)	To measure the gas pressure coming to the boiler.
Combustion analyzer (Digital preferred)	For combustion testing.
Contact thermometer	For checking surface temperatures of heat exchanger and pipes.

Troubleshooting *(continued)*

Check the following:

1. Space heating:
   a. Make sure thermostat is calling for heat and contacts (including appropriate zone controls) are closed.
   b. Check for 24VAC between thermostat wire nuts and ground.
2. DHW:
   a. Make sure tank aquastat is calling for heat.
3. BMS systems:
   a. Make sure the BMS is calling for heat.
4. Make sure all external limit controls are either installed (and closed) or temporarily jumpered for testing.
5. Make sure that connectors to the control module are securely plugged in at module and originating controls and harness connectors.
6. Gas pressure must be as specified on page 47. Make sure gas pressure switches are not tripped.

Always check Control module fuses

WARNING ALWAYS check control module fuses before replacing control module or any major components (blower, etc.). If one of these fuses is blown, it can prevent control module or other components from operating.

1. Turn OFF power to boiler at external line switch.
2. **Access the control box**:
   a. Remove the top front slate-colored panel.
   b. Slide the glossy black panel up into its alternate position.
   c. Remove the two (2) screws securing the middle slate-colored panel and remove the panel.
   d. Remove the three (3) screws securing the control box cover.

Control module fuses

1. Remove and inspect the two (2) Control fuses and the Expansion module fuse (located as shown below).
2. If necessary, replace the fuse:
   a. Item 1 – Low voltage circuit fuse is a 3-amp fast-blow.
   b. Item 2 – Line voltage circuit fuse is a 12-amp fast-blow.

Figure 96 Control module fuse

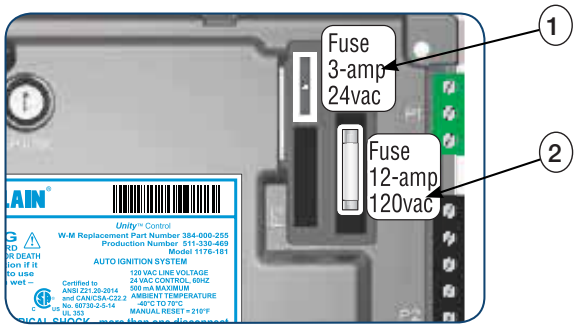

Figure 97 Expansion module fuse

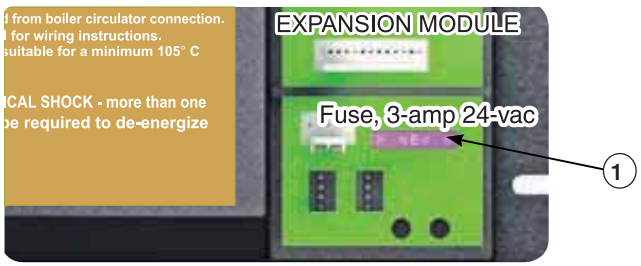

WARNING Do not jumper fuse or replace with any fuse except as specified. Failure to comply could result in severe personal injury, death or substantial property damage.

Circulator and Blower Fuse

1. Remove and inspect the BOILER CIRCULATOR fuses and the BLOWER fuse (located as shown below).
2. If necessary, replace the fuse:
   a. Item 3 (tan)– Line voltage circuit fuse is a 16-amp slow-blow.
   b. Item 4 (black)– Line voltage circuit fuse is a 20-amp slow-blow.
   c. Item 5 (black,red & blue)– Line voltage circuit fuse is a 12.5-amp slow-blow.

Figure 98 *SVF* **1500/2000** Circulator and blower fuse location

Figure 99 *SVF* **2500/3000** Circulator and blower fuse location

3. Re-install jacket panels:
   a. Re-install the control box cover and tighten the three (3) screws to secure the panel.
   b. Re-install the middle slate-colored panel and tighten the two (2) screws to secure the panel.
   c. Slide the glossy black panel down into position.
   d. Re-install the top slate-colored panel.
4. Restore power to boiler at external line switch and verify boiler operation after completing boiler service.

Checking temperature sensors

1. The boiler temperature sensors (flue, outdoor, boiler in, boiler out, return and system) are all resistance-type devices.
2. Figure 100, page 101 shows the correct value for the sensor at various temperatures.
3. Use the resistance values at 32°F, 60°F, 70°F and 212°F to measure the sensor resistance at known temperatures (freezing point, room temperature and sea level boiling point). For freezing point and

Troubleshooting *(continued)*

WARNING Make sure to determine the causes of outages. Do not leave the boiler operating without a complete diagnosis.

Figure 100 Sensor resistance value

Sensor resistances for Flue temperature, Outdoor, Boiler in & out, Return, and System sensors					
Temp (°F)	Sensor ohms		Temp (°F)	Sensor ohms	
	Min	Max		Min	Max
32	34265	37871	120	4517	4992
40	27834	30764	130	3698	4088
50	21630	23907	140	3043	3364
60	16944	18727	150	2517	2782
70	13372	14780	160	2091	2311
80	10629	11747	170	1744	1928
90	8504	9399	180	1461	1615
100	6847	7568	190	1229	1359
110	5545	6129	200	1038	1147

boiling point, insert the sensor in water at that temperature. Use an ohmmeter to read resistance value.

4. To check whether the control module is correctly sensing temperature, you can use a resistance decade box. Connect the decade box temporarily in place of a sensor and read the corresponding temperature on the Control display. The temperature should be close to the value corresponding to the input resistance.

Control fault indications

1. The Control provides diagnostic information for both automatic reset conditions and manual reset conditions. See Figure 63, page 72 for information available on the Control display.
2. Figure 101 shows the screen behavior during an automatic or manual reset condition. The table below the display illustration lists manual reset conditions and how to reset from them.
3. Figure 102, page 102 lists conditions that will cause the control to display a constant red screen. The boiler will automatically restart if the condition self-corrects or the technician uses the Control's manual reset screens to reset.

Figure 101 Control display toggles when in lockout, with screen flashing red to gray

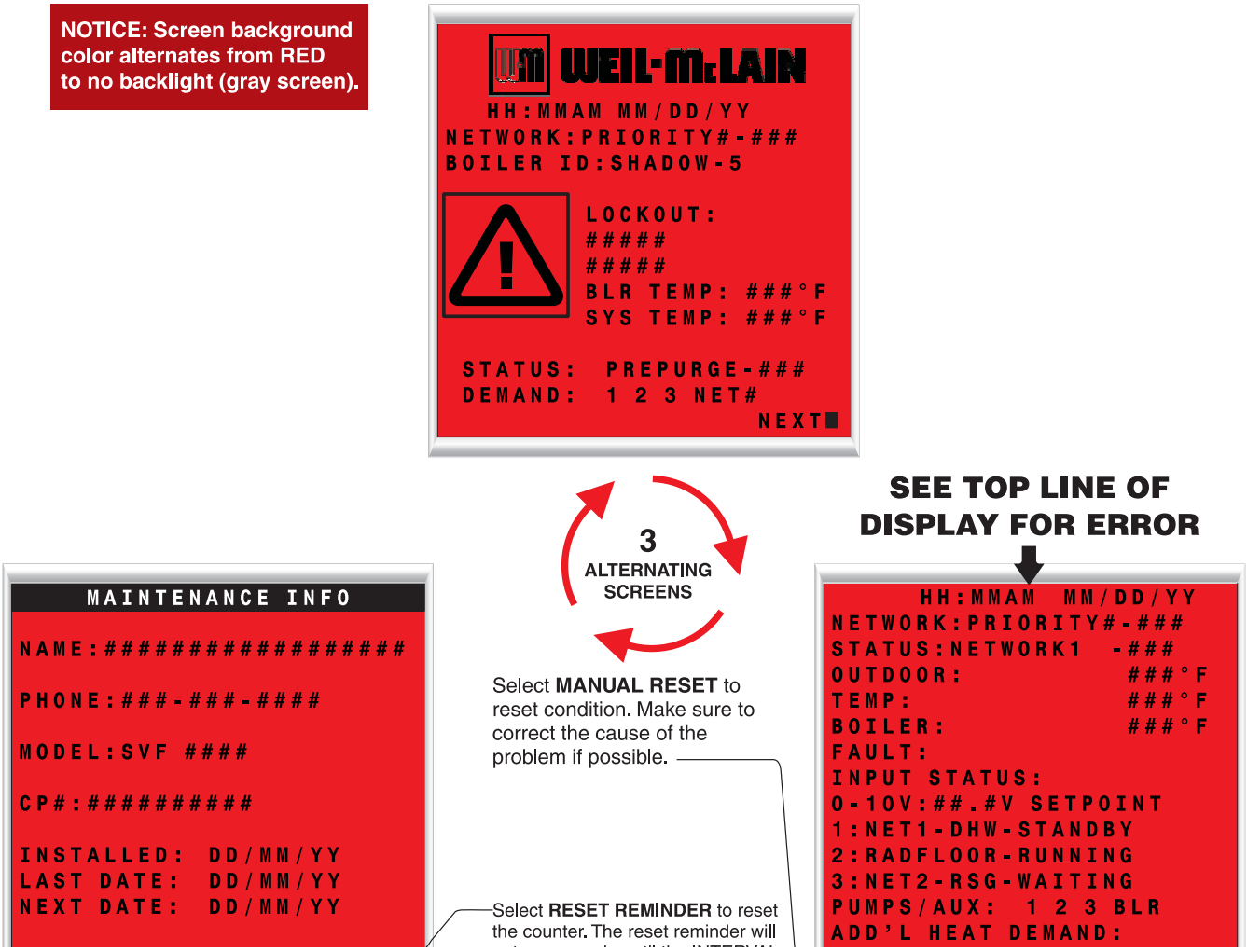

Troubleshooting *(continued)*

Figure 102 Troubleshooting suggestions for ***SVF***™ boilers

RESET TO FACTORY DEFAULT

1. Selecting this will prompt the user to hold the enter button for a specified length of time. Upon completion, this will reset the control settings back to factory installed settings.

   ONCE THIS IS CHOSEN, PREVIOUS SETTINGS CANNOT BE RECOVERED. ENSURE THIS ACTION IS TRULY DESIRED BEFORE CONTINUING.

2. Reset to Factory Default can be found on the BOILER SETTINGS menu, see Figure 67, page 75.

Control Error Condition Log

The Control is able to record information about the boiler's condition at the time of the three previous faults or errors. This information is available to view in Contractor Menus under "DIAGNOSTICS" by selecting "PAST ERRORS." The control will display the following information:

Information	Description	Action
Control Fault	Records number	Select and press the enter key to reset this count
Ignition Retries	Displays the number of ignition attempts in the current ignition sequence.	
Manual Reset Count	Records number of lockouts that required a manual reset since this count was last cleared.	Select and press the enter key to reset this count
Auto Reset Count	Records number of lockouts that have automatically reset since this count was last cleared.	Select and press the enter key to reset this count
Lockout History 1	Details of present or last recorded lockout	Select and press the enter key for more details
Lockout History 2	Details of boiler during the second oldest lockout still in memory	Select and press the enter key for more details
Lockout History 3	Details of boiler during the oldest lockout still in memory	Select and press the enter key for more details

How to read the last 3 lockout histories:

1. Scroll down to "DIAGNOSTICS" and press the enter key (Square Key in center)
2. Scroll down to "ERRORS" and press the enter key (Square Key in center)
3. Scroll down to "LOCKOUT HISTORY #" and press the enter key.
4. Scroll to choose the either "MANUAL RESET" or "AUTO RESET" and press the enter key to display the fault condition that was recorded.
5. Press the left arrow key to return to the LOCKOUT HISTORY # screen. Scroll up or down to highlight other choices and press the enter key to view the details of the boiler's condition when the lockout was recorded.
6. TO CLEAR ALL LOCKOUT HISTORIES: While on the "ERRORS" screen, hold the Left and Right arrow buttons simultaneously for 5 seconds.

How to clear all lockout histories:

1. While on the "PAST ERRORS" screen, hold the Left and Right arrow buttons simultaneously for 7 seconds.

Troubleshooting *(continued)*

Figure 102 Troubleshooting suggestions for ***SVF™*** boilers *(continued)*

Control Fault Displays, Diagnostics and Suggested Corrective Actions			
Display	**Condition**	**Diagnostics**	**Corrective Action(s)**
Nothing shown on display screen and boiler will not respond to call for heat	Control is not receiving 24V power.	Check wiring for short circuit or incorrect wiring.	Correct wiring per wiring diagram including connection of transformer to the control.
		Check 3-amp low voltage fuse on control shown on page 100.	Replace fuse with proper part found in replacement part section of this manual. If fuse blows again recheck wiring per diagram.
		Check transformer connection to the control per wiring diagram. Check for 24V output of transformer.	Replace transformer if it is receiving 120VAC, but not outputting 24VAC.
Nothing shown on display screen and boiler will not respond to call for heat	Control is not receiving 24V power.	Check wiring for short circuit or incorrect wiring.	Correct wiring per wiring diagram including connection of transformer to the control.
		Check 3-amp low voltage fuse on control shown on page 100.	Replace fuse with proper part found in replacement part section of this manual. If fuse blows again recheck wiring per diagram.
		Check transformer connection to the control per wiring diagram. Check for 24V output of transformer.	Replace transformer if it is receiving 120VAC, but not outputting 24VAC.
Nothing is shown in display screen and no other boiler components are operating	Control is not receiving 120V power.	Check service switch and/or circuit breaker to boiler is turned on.	Turn on service switch to power boiler.
		Is there 120VAC at the service switch?	Troubleshoot and correct the power supply to the service switch.
		Check for 120VAC at the line voltage terminal block located inside the top left electrical compartment.	Correct wiring inside the control pod using the wiring diagram in this manual.
		Inspect 12-amp fuse as shown on page 100. Replace if necessary.	Replace the fuse with proper part found in the replacement part section of this manual. If fuse blows again recheck wiring per diagram.
Nothing is shown on display screen, but boiler is operating	Occurs if the communication is lost from the control to the display.	Check for loose connections and proper pin alignment/ engagement on the control's plug P9, Pump/Comm board P6 + J1, and the back of the display circuit board.	Check for continuity on the wire harness from the display to the control. See repair parts section for proper replacement part.
		Cycle power off and on using boiler power switch and check for operation.	Replace with new display module. See repair parts section for proper replacement part.
	or Display contrast needs to be adjusted.	Look at the screen from other angles.	Power cycle the boiler, wait about 45 seconds then Press and hold the Enter button. While holding the Enter button, tap the up or down buttons to adjust the contrast level. If this does not work replace display.
TEMP RISE TOO QUICKLY	Occurs if supply water temperature in heat exchanger rises faster than 2º F per second during the first two minutes the burner is on.	Automatically resets after 1 minute delay or using manual reset on display. Manual reset is necessary after 5 automatic resets have occurred during the same Priority heat demand. Reset using manual reset screen on display.	Verify water pipe is installed correctly per instructions in this manual.
			Verify proper circulator and speed for boiler size and system requirements.
			See message displayed TEMPERATURE SENSOR and follow procedure for loose connections.
DISPLAY COMM Fault	Occurs if display communications out for 30 seconds.	Automatically resets when communication is re-established.	Check for a loose connection at the molex plug on the control and connection on the back of the display.

Troubleshooting *(continued)*

Figure 102 Troubleshooting suggestions for ***SVF***™ boilers *(continued)*

Control Fault Displays, Diagnostics and Suggested Corrective Actions			
Display	**Condition**	**Diagnostics**	**Corrective Action(s)**
LOW WTR CUTOFF OPEN	Occurs if internal low water cutoff contacts open.	Automatic reset occurs if contacts are open at least one second, but less than 5 seconds. Manual reset of control if contacts are open longer than 5 seconds.	Check for low water condition in system. Repair system as necessary refer to piping section of this manual. If low water condition does not exist, check Diagnostics — Inputs screen to view status of Low Water Cutoff. If shown as OPEN check wiring between LWCO and control. If wiring is all right, remove LWCO and Clean probe. If problem still exist, then replace the LWCO. Low water cutoff indicator light codes: GREEN on = Normal operation RED on = LWCO open / Low water condition
SUPPLY 58° F > RETURN	Boiler Out temperature has exceeded the Boiler In temperature by more than 58° F.	Automatically resets after 2 minutes 30 second delay when conditions no longer exists. If the burner has been on for less than 2 minutes the condition occurs: 1st time: 2 min 30 sec 2nd time: 3 min 30 sec 3rd time: 4 min 30 sec 4th time: 5 min 30 sec 5th time: 6 min 30 sec and every time after * timer resets once the burner is able to run longer than 2 minutes.	Verify water pipe is installed correctly per instructions in this manual. Verify proper circulator and speed for boiler size and system requirements. See message displayed TEMPERATURE SENSOR and follow procedure for loose connections.
RETURN > SUPPLY	Occurs if a return water temperature is greater than the corresponding supply temperature by 10° F or more.	Automatically resets when condition no longer exists.	Verify proper flow direction of the boiler circulator. Verify proper placement of system sensors for single or multiple boiler system. System sensors should be on system piping not on the boiler loop. Verify sensors are wired to correct terminal locations. System sensors may need to be located further away from the boiler loop connection to the system, if proximity to the boiler loop is causing sensors to be heated inaccurately.
SUPPLY WATER TEMPERATURE TOO HIGH	Occurs when the System Supply temperature goes above 200° F when the burner is running.	Automatically resets when Supply temperature goes below 200° F.	Verify proper flow direction of the boiler circulator. This circulator must be installed to push water through the system.
TEMPERATURE SENSOR FAULT	Occurs if a temperature sensor has electrically shorted (SHORT) or has become disconnected (OPEN).	Will automatically reset if the condition clears.	Check all the temperature readings of the boiler on the DIAGNOSTICS - TEMPERATURES menu to determine if any sensors are currently displayed as SHORT or OPEN. Compare this to the boiler temperatures recorded in the DIAGNOSTICS - ERRORS - LOCKOUT HISTORY # - TEMPERATURES during the last several lockout conditions. Determine which sensors are suspect and measure their resistance value and compare it to the values shown in Figure 94, page 98. If the resistance values are incorrect replace the temperature sensor. Refer to repair parts section for proper part number. Check wire harness for loose connections and pin engagement at sensor connection, chassis mount connection through control housing, and the control. Unplug connection at sensor and at control and check continuity between ends. If problem persists after checking items above, replace control. Refer to repair parts section for kit number.

Troubleshooting *(continued)*

Figure 102 Troubleshooting suggestions for ***SVF™*** boilers *(continued)*

Display	Condition	Diagnostics	Corrective Action(s)
LIMIT OPEN	Occurs if manual or automatic reset limit opens.	Automatic external limit will reset 2½ minutes after external limit device closes. Manual limit fault must be reset by choosing Manual Reset on the display.	Is there an external safety device connected? If yes, trouble shoot the external limit to determine and correct the cause that opened the limit. Also check for loose wiring connections.
			Remove the top right Control tray cover and inspect the connector. Ensure a jumper is installed across the MAN LIMIT terminals if not using a manual reset external limit. Ensure a jumper is installed across the AUTO LIMIT terminals if not using a automatic reset external limit.
HIGH TEMP LIMIT	Boiler temperature sensor reached High Temp Limit setting (no higher than 210° F).	Reset using manual reset screen on display.	Verify that high limit setting is at least 10° F above the maximum target temperature plus the off differential.
			Verify all isolation valves are open and circulators are programmed into the control properly. The boiler circulator output and System Pump/Aux. output can be configured to turn on or off with each priority. Refer to the Control Setup section to configure these properly for the system.
			Verify water pipe is installed correctly per instructions in this manual.
			Verify proper circulator sizing for boiler size and system requirements.
			See message displayed TEMPERATURE SENSOR and follow procedure for loose connections.
FLAME FAULT	Occurs if flame is detected when there should be no flame.	Reset using manual reset screen on display.	Burner may be operating too hot due to incorrect combustion. Inspect flame and conduct combustion test. Force boiler into high fire. Check flue gases with combustion analyzer and correct using the maintenance and startup procedure in this manual.
			Verify FLAME SIGNAL value quickly goes to zero on the DIAGNOSTICS - INPUTS screen when the gas valve closes.
			Check for flame at burner via flame current with burner off. Turn boiler off and watch flame through observation port. If flame continues after shut down replace gas valve.
BLOWER FAULT	Blower unable to reach required speed or does not reach 0 RPM when turned off.	Reset using manual reset screen on display; Control will check again after 1 hour and will automatically restart if condition is corrected.	Check wire harness for loose connections and pin engagement at blower connections, chassis mount connection through control housing, and control. Unplug connection at blower and at control and check continuity between ends. Blower is connected to both low voltage and line voltage harness.
			Check Diagnostics – Inputs screen with boiler in standby mode and blower not running. If BLOWER SPEED is not 0 RPM then replace blower.
			If blower does not rotate during ignition sequence check for 120V or 208V (depending on model) power at blower connection. If 120VAC or 208VAC power at blower motor and it doesn't start replace blower. Check power at control. If 120VAC is not present at control when boiler is powered replace Control. Refer to repair parts section.

Troubleshooting *(continued)*

Figure 102 Troubleshooting suggestions for ***SVF***™ boilers *(continued)*

Display	Condition	Diagnostics	Corrective Action(s)
IGNITION FAULT	Boiler goes through (*) number ignition attempts and never detected flame. • ***SVF*** 1500 = 2 tries • ***SVF*** 2000 = 2 tries • ***SVF*** 2500 = 2 tries • ***SVF*** 3000 = 1 try	Reset by using manual reset screen on display.	Check condensate trap for blockage allowing condensate to accumulate inside heat exchanger. Check ignition cable connection.
			Fouled, worn, bent, or faulty igniter. Fouled igniters can be cleaned for additional use with steel wool. Worn or badly fouled igniters should be replaced with the proper repair part. Igniter rods should be parallel with a 3.5mm (0.138 in) spark gap. **NOTICE**: Thin white deposits on the igniter are typical, but brown or black deposits could be the result of flue gas recirculation. Thoroughly inspect the venting system and termination for the possibility of leakage or flue gas feedback into the air line.
			Dirty burner and/or heat exchanger will cause high back pressure and poor ignition. Follow procedure in maintenance section of this manual to clean burner and heat exchanger. Visual inspection of tubing may not be sufficient to diagnose condition.
			Check combustion settings on high and low fire and adjust per setup instructions if necessary.
			Check incoming gas pressure with boiler off and at high fire. Adjust within limits on rating label.
			Verify correct boiler model and altitude is selected in control and correct elevation must be entered when operating above 2,00 feet.
			Check ignition cable resistance. Should measure 1000 Ohms (+/- 50 Ohms).
			Check for flue pipe and intake pipe restrictions or blockage.
			Check burner fasteners and gaskets.
AIR PRESSURE Switch Open	Occurs when Air Pressure connection is open.	Reset using Manual Reset screen on display. High pressure in the exhaust pipe or high vacuum in the boiler intake or cabinet has caused the air switch to open. The switch is closed in normal operating conditions.	Check boiler size selected in control against boiler rating label. Correct if necessary to select the proper boiler size.
			Check exhaust and intake pipe for restrictions or blockage.
			Check condensate drain for blockage. If condensate is unable to drain out of the boiler it can begin to block the flow of exhaust gases. Clean the condensate collection area of the base and condensate trap. Refill trap with fresh water.
			Check the P7 connection as seen on Figures 51, page 50 & Figure 55, page 54. Check the connections on the pressure switch.
GAS PRESSURE SW FAULT	Gas pressure switch is open (high or low).	Either the low gas pressure switch or high gas pressure switch has opened due to incorrect gas pressure being supplied to the boiler. Remove front door of boiler and look at pressure switches. The High pressure switch is mounted to the side of the gas valve. The Low gas pressure switch is located on the incoming gas manifold directly below the gas valve. Whichever switch has locked-out will have an indicator light on. Switches can be reset by pushing on plastic cover in the middle of the dial as indicated on the switch. Control will also need reset using display after gas pressure switch has been reset.	Gas pressure should always be within the limits on rating label. Undersized gas supply pipes or regulators may cause low gas pressure issues while the boiler is operating and possibly high gas pressure when the boiler shuts down.
			Insure the pressure regulator in the gas supply line is a lockup-type and all installation instructions have been followed.
			Ensure gas pressure switch settings are correct. Low Pressure Switch Setting = 2 inches H2O High Pressure Switch Setting = 14 inches H2O
			Check for blockages or incorrectly piped vents from the gas pressure regulator.
			• Low gas pressure switch can be reset when pressure has been restored. • High gas pressure switch can be reset when the high pressure has been reduced. Since the High gas pressure switch is mounted between the safety shut off valves on the gas valve assembly. Removing plug #1 from gas valve in Figure 82, page 90 will release trapped gas between the safety shutoff valves. Ensure that it is safe to release this gas in the area. Re-install plug #1. **WARNING** Failure to securely install plug #1 in gas valve will allow gas to leak which may result in severe personal injury, death or substantial property damage.

Troubleshooting *(continued)*

Figure 102 Troubleshooting suggestions for ***SVF***™ boilers *(continued)*

Display	Condition	Diagnostics	Corrective Action(s)
HW FAULT EXPANSION BRD	Expansion Control Board hardware has failed.	Expansion Control Board has detected an issue with it's hardware and has locked out. Requires a manual reset.	Check boiler size selected in Control against boiler rating label. Correct if necessary to select the proper boiler size.
GV FAULT EXPANSION BRD	Gas valve output of the Expansion module.	Expansion Control Board has detected an issue with the gas valve circuit. Requires a manual reset.	Check the wire harnesses between the Control, Expansion module, and gas valve.
EXP BOARD COM FAULT	Expansion Control Board communication fault.	Communication has been lost between the Control and the Expansion Control Board.	Check the communication wire harness between the two controls.
Hardware Fault	Occurs when micro-controllers on main board have a RAM or ROM error, or communication is cut off.	Check for hardware damages.	RAM or ROM errors can be reset with the manual reset option. If problems persist, replace main board.
Hardware Fault 1,2,3,4	The control has detected a problem with its gas valve output circuit.	Auto reset if condition is clear after lockout, then 1 hour automatic reset if condition clear, then manual reset required.	Check for physical damages. Check connections to gas valve and gas pressure. If problem persists, replace main board.
Closure Switch Fault	Closure switch connections on P7 Pins 2 and 3 are open for more than 4 minutes.	Soft lockout when 4 minute timer expires. Reset when closure is made.	None – Check jumper on correct pins and secure connection. Flow switch attached – Check correct pump is on, check wiring to flow switch, and check switch is closing. CAD – Check voltage to damper. Check damper is opening.
OUTDOOR SENSOR ERROR	Outdoor temperature sensor short or OPEN.	Will automatically reset if the condition clears. Warning only. Supply Max is targeted until ODT is restored, if used for target adjustment.	Determine which sensors are suspect and measure their resistance value and compare it to the values shown in Figure 100, page 101. If the resistance values are incorrect replace the temperature sensor. Refer to repair parts section for proper part number. Check wire harness for loose connections and pin engagement at sensor connection, chassis mount connection through control housing, and the control. Unplug connection at sensor and at control and check continuity between ends. If problem persists after checking items above, replace control. Refer to repair parts section for kit number.
Flue Temp Too High	Occurs if flue temperature sensor exceeds 210°F (Warning) or 220°F (Lockout).	Automatic reset occurs if temperature drops below 210°F for 2 ½ minutes. Manual reset is required if the temperature rises above 220°F. Reset using manual reset screen on display.	Follow procedure above for SHORT and OPEN sensor conditions to properly diagnose sensor. In addition inspect heat exchanger combustion chamber and flue-ways for abnormal wear and buildup. Inspect vent system for abnormal wear or damage. Contact Weil-McLain Technical Support.

Maintenance

Disconnect power before servicing

WARNING Electrical shock hazard — Disconnect all electrical power to the boiler before attempting maintenance procedures. Failure to complete could result in severe personal injury, death or substantial property damage.

Perform startup and check/out

WARNING Removing and reinstalling components can change boiler behavior.

CAUTION After any maintenance procedure, you must verify operation after servicing. To do so, follow the complete procedure for boiler and system startup, beginning on page 85. Failure to comply could result in severe personal injury, death or substantial property damage.

CAUTION Label all wires prior to disconnection when serving controls. Wiring errors can cause improper and dangerous operation.

General maintenance

1. Oil motors in system requiring regular oiling.
2. See Oiled bearing pumps for motor oiling procedures.

Oiled-bearing pumps

Check pumps in the system. Oil any pumps requiring oil, following pump manufacturer's instructions. Over-oiling will damage the pump.

Clean the heat exchanger when required — water side

1. In order for the efficiency of boilers to increase beyond the condensing limit, new materials have been introduced for the heat exchanger, including stainless steel.
2. Stainless steel has excellent heat transfer characteristics and is light in weight.
3. These new materials also require cleaning solutions that differ from those used in conventional cast iron and steel boilers.

WARNING One common cleaning method that **CANNOT** be used with systems containing stainless steel is a solution of trisodium phosphate, commonly referred to as "TSP."

Weil-McLain recommends Sentinel X400 for cleaning boiler. See the Replacement Parts section at the end of this manual for ordering information.

Clean the heat exchanger when required — flue side

1. Shut down boiler:
   a. Follow "**To Turn Off Gas to Appliance**" instructions on boiler and Lighting instructions Figure 83, page 91.
   b. Do not drain boiler unless it will be exposed to freezing temperatures. If using freeze prevention fluid in system, do not drain.
2. Close the external manual gas valve to ensure there is no gas flow to the unit.
3. Safely bleed the excess gas from between the external manual shutoff and the gas valve.
4. Allow time for boiler to cool to room temperature if it has been operating.
5. Follow either "Burner Access Method" or "Hinged Cover Plate Method" to access the combustion chamber and heat exchanger tube sheet.

Burner access method (removal)

Follow the procedure on page 96 (steps 1-9) to remove the burner and access the heat exchanger.

Hinged Cover Plate Method (removal)

1. Remove the top rear and middle panels. Remove the rear two (2) screws on the support brackets and loosen the front two (2) screws. Swing the support brackets up and out of the way.
2. Remove the front left and right side panels.
3. Disconnect the reference tube from the air inlet shroud.
4. Loosen the two (2) screws and slide the filter support down. Then remove air inlet filter.
5. Remove the gas manifold.
   a. Remove the four (4) M5 screws securing the gas manifold to the blower swirl plate.
   b. Remove the four (4) M8 screws securing the gas manifold to the automatic gas valve.
   c. Set aside manifold.
6. Loosen the twelve (12) bolts securing the cover plate to the heat exchanger.
7. Remove the locking pin from cover plate.
8. Push down on the top of the blower to hinge the cover plate up.
9. Insert the locking pin to hold the cover plate open. Ensure the pin is inserted fully and securely.

WARNING Ensure locking pin is securely in plate. Failure to comply could result in severe personal injury, death or substantial property damage.

Water spray the heat exchanger

1. Disconnect the condensate trap at the bottom of the heat exchanger so debris will not clog the trap.
   a. Loosen the hose clamp on the 1" Fernco fitting and the nuts securing the U-bolt to remove the condensate trap assembly.
   b. Place a pan under condensate drain outlet to collect water and any debris.
2. Use the combustion chamber opening to spray water down into the heat exchange tubes. Continue spraying until all debris in the tubes has been flushed into the base.
   a. Spray water through the condensate line to clean it thoroughly.
   b. Remove the pan and re-install the condensate line.
3. Do NOT spray the burner or cover plate insulation directly if the burner or cover plate insulation is not removed.

Maintenance *(continued)*

Figure 103 Heat exchanger cover plate gasket and cover plate re-installation

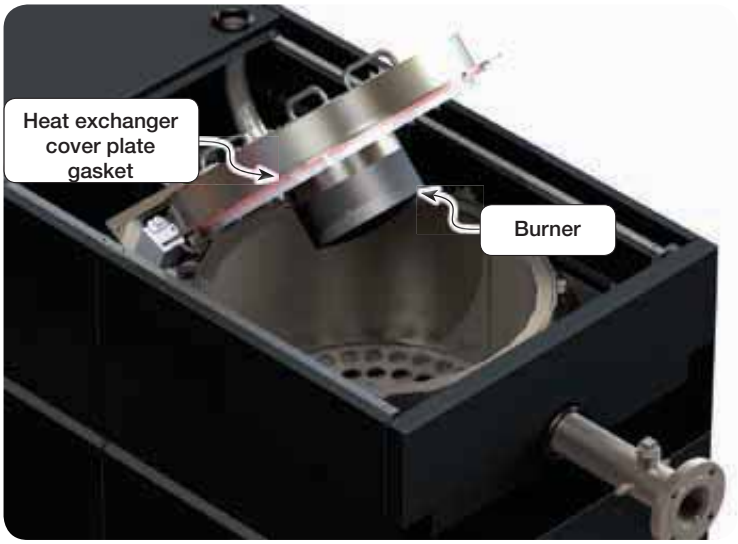

4. Allow time for the burner or cover plate insulation to dry completely if they do get wet.

Inspect burner access plate / burner gasket

Inspect the silicone burner access plate gasket and graphite burner gasket. Replace if damaged.

Burner Access Method (re-install)

Follow the procedure on page 97 (steps 12-16) to re-install the burner and access plate to the heat exchanger.

Hinged Cover Plate Method (re-install)

1. Push down on the top of the blower to allow the locking pin to be removed.
2. Slowly and steadily lower the cover plate, ensuring the gasket lands properly in the gasket groove on the heat exchanger.
3. Gradually tighten the 12 bolts securing the cover plate to the heat exchanger in the order shown on Figure 104, page 110 to a torque of 15 ft.-lbs.
4. Re-install locking pin into cover plate storage location.
5. Install the gas manifold.
   a. Install the four (4) M5 screws securing the gas manifold to the blower swirl plate. Ensure the O-ring is seated properly and not damaged.
   b. Install the four (4) M8 screws securing the gas manifold to the automatic gas valve. Ensure the O-ring is seated properly and not damaged.
6. Install the air inlet filter and slide support bracket up until it makes contact with the rubber end of the air filter. Tighten the two (2) screws to secure it.
7. Insert the reference tube into the air inlet shroud.
8. Install the front left and right side panels.
9. Swing the top rear panel support brackets back into position. Secure screws with a 5/16 nut driver.
10. Install the top rear and middle panels.

WARNING **Burner gasket and burner access gasket —** If the burner or burner access plate gaskets have been damaged or stretched, replace the damaged or stretched gasket before placing the boiler back in operation.

Filter Condition

1. A dirty or blocked filter will reduce boiler efficiency. A filter condition gauge is present with each boiler. Inspect the filter gauge regularly.
2. If the filter gauge marker is in the red zone, the filter needs to be cleaned or replaced.
3. Clean the filter using compressed air. Remove the filter by loosening the hose clamp with a 5/16" nutdriver. From the inside, blow out the filter along each of pleats until no more dust or debris is blown out.
4. After replacing the filter, reset the filter gauge by pressing the yellow reset button.
5. If the filter gauge marker remains in the green zone, no filter cleaning or replacement is necessary.

Restart and test the boiler

1. Restore gas supply and power to the boiler.
2. Start the boiler and verify operation following the procedures given in this manual.

WARNING Failure to follow the provided procedures could result in a gas/air or exhaust gasses leak which can cause severe personal injury, death or substantial property damage.

Maintenance *(continued)*

Figure 104 Cover plate nut tightening sequences

WARNING **Gradually tighten** the cover plate and burner plate access bolts in the sequence shown in illustration:

Burner & Burner Access Plate torque: 10 N-m/88.5 in-lbs/7.4 ft-lbs. (11mm socket)

Cover Plate torque: 20 N-m/177 in-lbs/14.8 ft-lbs. (13mm socket)

If the tightening is not done as specified, the cover plate could buckle, allowing a flue gas leakage.

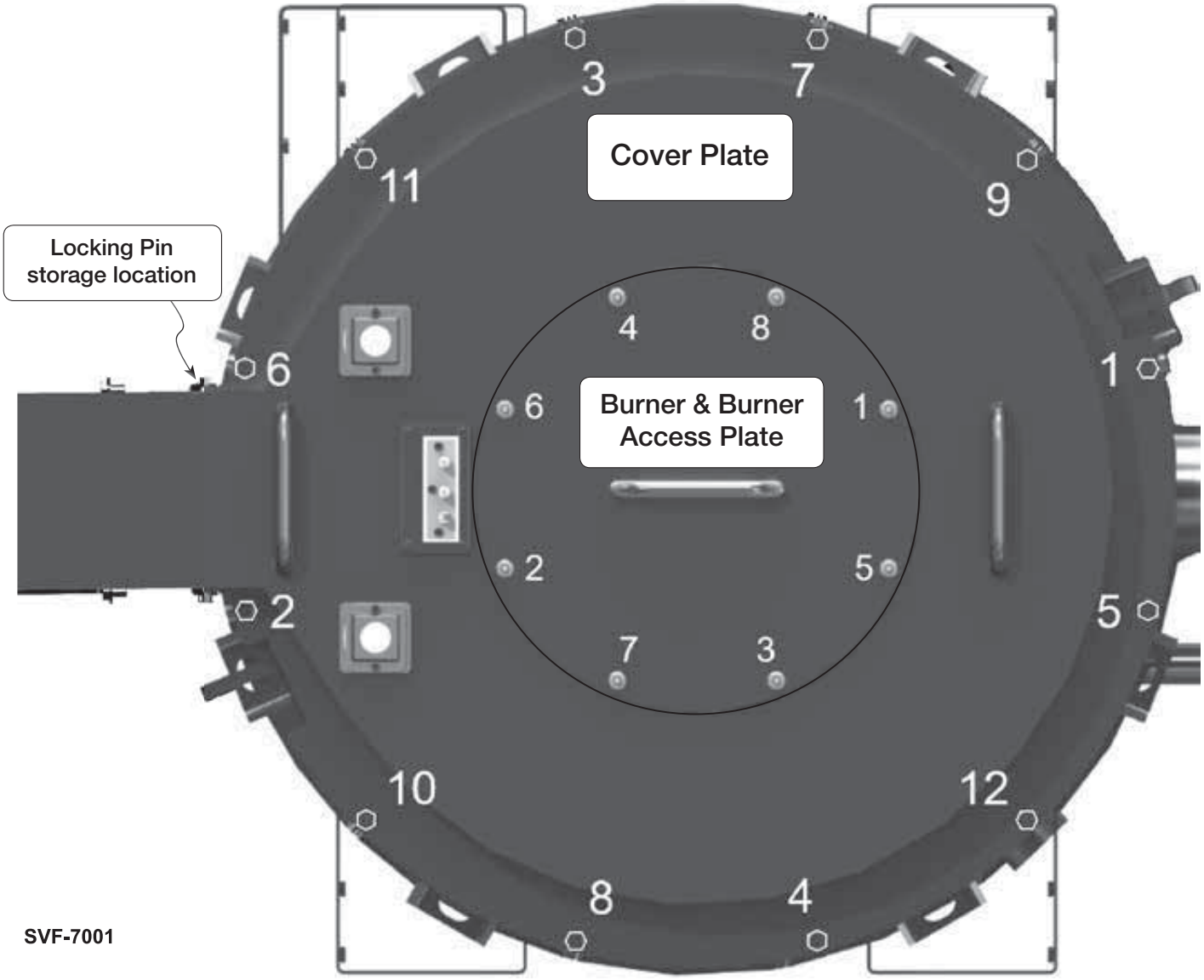

Replacement parts

Go to www.weil-mclain.com to locate Weil-McLain distributors

WARNING Replacement parts must be purchased through a local Weil-McLain distributor. When ordering, specify boiler model and size and include description and part number of replacement part. Results from using modified or other manufactured parts will not be covered by warranty and may damage boiler or impair operation.

NOTICE Weil-McLain part numbers are found in Weil-McLain Boilers and Controls Repair Parts Lists.

WARNING **The boiler contains ceramic fiber materials.** Use care when handling these materials per instructions on page 93 of this manual. Failure to comply could result in severe personal injury.

Figure 105 Miscellaneous parts and kits

Description	Part Number
Condensate neutralizer kit (up to 3000 MBH)	383-600-287
Pressure relief valve for SVF 1500/2500 ASME 30 PSI, 1¼" NPT female ASME 50 PSI, 1¼" NPT female ASME 80 PSI, 1¼" NPT female (includes new P/T gauge) ASME 100 PSI, 1¼" NPT female (includes new P/T gauge) ASME 150 PSI, 1¼" NPT female (includes new P/T gauge)	383-600-093 383-600-101 383-600-299 383-600-298 384-000-148
Pressure relief valve for SVF 2500/3000 ASME 30 PSI, 2" x 2-1/2 NPT female ASME 50 PSI, 2" x 2-1/2 NPT female ASME 80 PSI, 1¼" NPT female (includes new P/T gauge) ASME 100 PSI, 1¼" NPT female (includes new P/T gauge) ASME 150 PSI, 1¼" NPT female (includes new P/T gauge)	383-600-095 383-600-096 383-600-299 383-600-298 384-000-148
Antifreeze, Sentinel X500 (5 gallons) . . . . . . Corrosion inhibitor, Sentinel X100 (5 gallons). . . . . . Corrosion inhibitor, Sentinel X100 (50 gallons) . . . . . . Inhibitor quick-test kit . . . . . . Cleaner, Sentinel X400 (one tube, 275 ml)	592-900-006 592-900-016 592-900-017 592-900-005 592-900-003
Annual maintenance kit consisting of: (1) ignitor/flame sense rod, (1) inhibitor test kit (1) SVF 1500/2000 gasket seal kit	384-000-240
Annual maintenance kit consisting of: (1) ignitor/flame sense rod, (1) inhibitor test kit (1) SVF 2500/3000 gasket kit	384-000-257
Temperature Sensor, System (Strap on)	383-500-601
Conversion Kit Natural gas to LP SVF 1500/2000/2500/3000	384-000-221
Kit-Service Gasket- Seal SVF 1500/2000 Kit-Service Gasket- Seal SVF 2500/3000	384-000-241 384-000-242
Kit-Service Air Inlet SVF 1500/2000 Kit-Service Air Inlet SVF 2500/3000 Kit-Service Air Grate SVF 1500-3000	384-000-218 384-000-219 384-000-259
Kit-Service Automatic Air Valve - ½" NPT	384-000-153
Vent Adapter SVF 1500/2000 348" SS to PVC Vent Adapter SVF 2500/3000 10" SS to PVC	560-907-830 560-907-831

Replacement parts *(continued)*

Go to www.weil-mclain.com to locate Weil-McLain distributors

Figure 106 Jacket parts

Item	Description	Part Number
100	Kit-Service Jacket Cover Trim-Side (hardware) SVF 1500 - 3000	384-000-234
110	Kit-Service Jacket Side Panel (hardware) SVF 1500 - 3000	384-000-235
120	Kit-Service Jacket Trim-Side (hardware) SVF 1500 - 3000	384-000-236
130	Kit-Service Jacket Front Bottom Panel (hardware) SVF 1500 - 3000	384-000-237
140	Kit-Service Jacket Front Center Panel (hardware) SVF 1500 - 3000	384-000-238
150	Kit-Service Jacket Front Display Panel (hardware) SVF 1500	384-000-246
	Kit-Service Jacket Front Display Panel (hardware) SVF 2000	384-000-245
	Kit-Service Jacket Front Display Panel (hardware) SVF 2500	384-000-244
	Kit-Service Jacket Front Display Panel (hardware) SVF 3000	384-000-239
160	Kit-Service Jacket Front Top Panel (hardware) SVF 1500 - 3000	384-000-247
170	Kit-Service Jacket Top Front Panel (hardware) SVF 1500 - 3000	384-000-248
180	Kit-Service Jacket Top Center (hardware) SVF 1500 - 3000	384-000-249
190	Kit-Service Jacket Top Back (hardware) SVF 1500 - 3000	384-000-250
200	Kit-Service Jacket Back Top - 1 Panel (hardware) SVF 1500 - 3000	384-000-251
210	Kit-Service Jacket Back Top - 2 Panel (hardware) SVF 1500 - 3000	384-000-252
220	Kit-Service Jacket Back Bottom SVF 1500	384-000-253
	Kit-Service Jacket Back Bottom SVF 2000	384-000-265
	Kit-Service Jacket Back Bottom SVF 2500	384-000-266
	Kit-Service Jacket Back Bottom SVF 3000	384-000-267
230	Kit-Service Jacket Control Cover (hardware) SVF 1500 - 3000	————
240	Kit-Service Bracket - Display Panel SVF 1500 - 3000	384-000-268
250	Kit-Service Support Vertical Center SVF 1500 - 3000 (not shown)	384-000-260
260	Kit-Service Support Vertical Back SVF 1500 - 3000 (not shown)	384-000-261
270	Kit-Service Support Vertical Front SVF 1500 - 3000 (not shown)	384-000-262
280	Kit-Service Bracket Jacket Support SVF 1500 - 3000 (not shown)	384-000-263
290	Kit-Service Frame Top Side SVF 1500 - 3000 (not shown)	384-000-264
300	Kit-Service Assembly-Base Replacement SVF 1500 - 3000 (not shown)	384-000-229
310	Kit-Service Box-Base Tray-Control (hardware) SVF 1500 - 3000 (not shown)	384-000-230
320	Kit-Service Box-Base Heat-Exchanger (hardware) SVF 1500/2000 (not shown)	384-000-231
330	Kit-Service Box-Base Heat-Exchanger (hardware) SVF 2500/3000 (not shown)	384-000-232
340	Kit-Service Bracket Heat-Exchanger Support SVF 1500 - 3000 (not shown)	384-000-233
350	Paint Touch up - Slate SVF 1500 - 3000 (not shown)	384-000-141
360	Kit-Service Control Compartment 1500-2000 (not shown)	384-000-321
370	Kit-Service Control Compartment 2500-3000 (not shown)	384-000-322
380	Kit-Service Control Compartment Cover (not shown)	384-000-312
390	Kit-Service Field Wiring Box (not shown)	384-000-313
400	Kit-Service Field Wiring Box Cover (not shown)	384-000-314
410	Kit-Service Top Side Rails (not shown)	384-000-320
420	Kit-Service Gaskets - On base sealing bottom of side panels (not shown)	384-000-298
430	Kit-Service Gaskets - On vertical edges of removable side panels (not shown)	384-000-299
440	Kit-Service Gaskets - On front, side, top and rear panels (not shown)	384-000-300
450	Kit-Service Gaskets - On front, top and rear panels (not shown)	384-000-301
460	Kit-Service Gaskets - On front, top, display and rear panels (not shown)	384-000-302

Replacement parts *(continued)*

Figure 107 Jacket parts

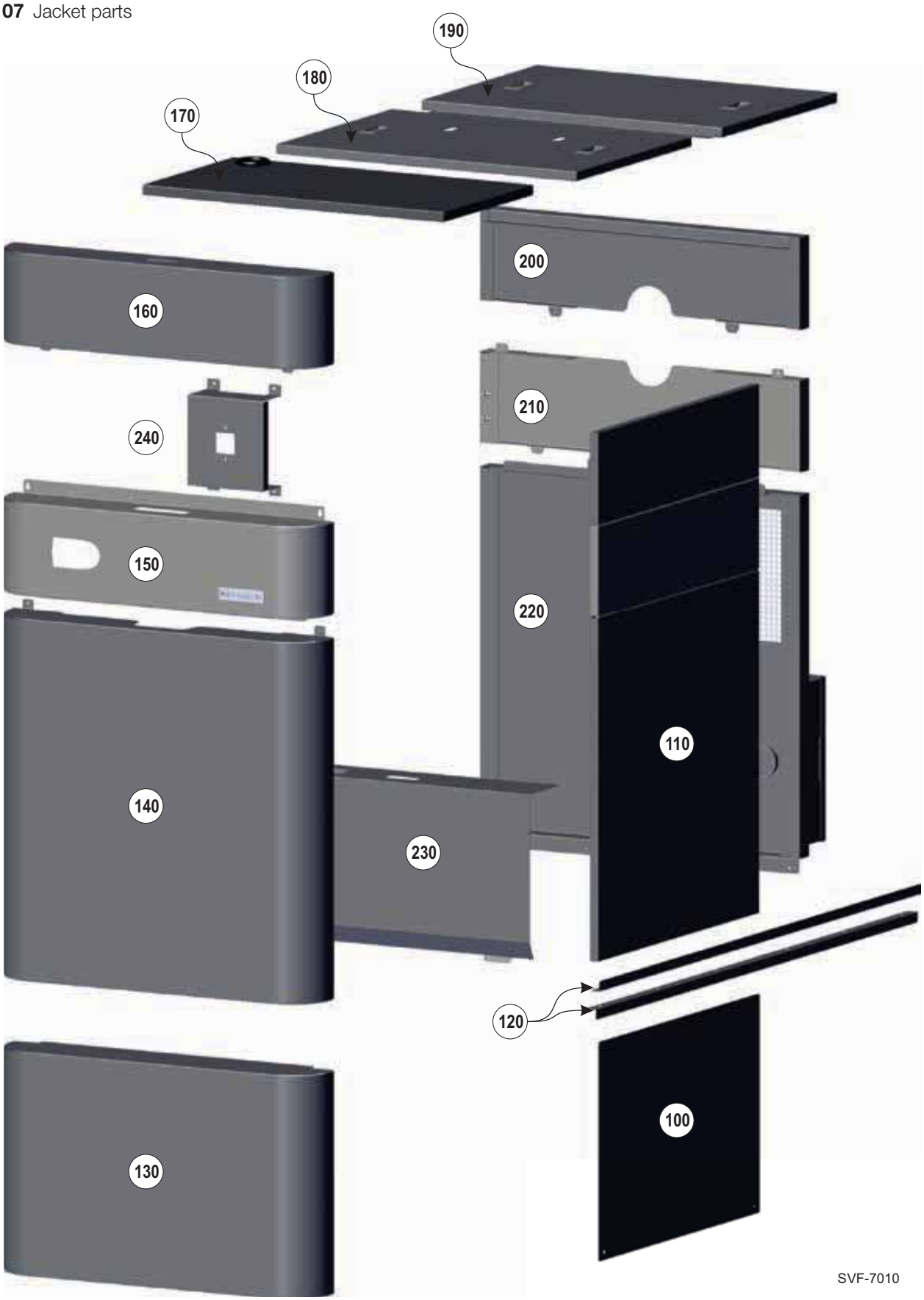

Replacement parts *(continued)*

Go to www.weil-mclain.com to locate Weil-McLain distributors

Figure 108 Burner, blower, cover plate, venturi, gas train and miscellaneous

Item	Description	Part Number
100	Kit-Service Burner-GX F-Mesh (hardware) SVF 1500/2000	384-000-204
	Kit-Service Burner-GX F-Mesh (hardware) SVF 2500/3000	384-000-205
110	Kit-Service Plate-Cover Burner/Heat Exchanger (gasket & hardware) SVF 1500/2000	384-000-206
	Kit-Service Plate-Cover Burner/ Heat Exchanger (hardware) SVF 2500/3000	384-000-207
120	Kit-Service Burner Insulation SVF 1500/2000	384-000-208
	Kit-Service Burner Insulation SVF 2500/3000	384-000-209
130	Kit-Service Blower Modulating Premix (hardware) SVF 1500/2000	384-000-210
	Kit-Service Blower Modulating Premix (hardware) SVF 2500/3000	384-000-211
140	Kit-Service (Venturi) Swirlplate/Shroud SVF 1500 - 3000	384-000-212
150	Kit-Service Gas Flapper (hardware) SVF 1500 - 3000	384-000-213
160	Kit-Service Filter Air SVF 1500 - 3000	384-000-214
170	Kit-Service Pipe-Gas Inlet SVF 1500 - 3000	384-000-220
180	Kit-Service Manifold-Gas with T-Handle Valve (hardware) SVF 1500/2000	384-000-215
	Kit-Service Manifold-Gas with T-Handle Valve (hardware) SVF 2500/3000	384-000-216
190	Kit-Service Valve-Gas SVF 1500 - 3000	384-000-217
200	Kit-Service Manual Gas Valve, T-Handle SVF 1500 - 3000	383-600-244
210	Kit-Service Flanged Orifice Fitting SVF 1500 - 3000 (Not shown)	384-000-258
220	Kit-Service Condensate Dish with gasket SVF 1500/2000	384-000-223
	Kit-Service Condensate Dish with gasket SVF 2500/3000	384-000-224
230	Kit-Service Caster kit, non-swivel (Caster, hardware) SVF 1500/2000	384-000-225
	Kit-Service Caster kit, swivel (Caster, hardware) SVF 2500/3000	384-000-226
240	Kit-Service Leveling leg kit (Leveling leg, hardware) SVF 1500 - 3000	384-000-227
250	Kit-Service Condensate trap assembly SVF 1500 - 3000	384-000-228
260	Kit-Service Inspection glass -Exchanger (Includes glass, retainer, gasket and screws) SVF 1500 - 3000	383-500-020
270	Kit-Service Gas pipe brackets (not shown)	384-000-315
280	Kit-Service Air filter indicator gage bracket and grommet (not shown)	384-000-316
290	Kit-Service Air filter support and manual holder bracket (not shown)	384-000-317
300	Kit-Service Igniter adapter plate (not shown)	384-000-318
310	Kit-Service Igniter gaskets [qty:2] (not shown)	384-000-319

Replacement parts *(continued)*

Figure 109 Burner, blower, cover plate, venturi, gas train and miscellaneous

Replacement parts *(continued)*

Figure 110 Controls

Item	Description	Part Number
100	Kit-Service Control module with Circ. board (Module, hardware)	384-000-255
110	Kit-Service Display Housing with/LCD SVF 1500-3000	384-000-256
120	Kit-Service Control Module Expansion 120 Volt	383-600-160
130	Kit-Service Electronic Ignition SVF 1500/2000 (Igniter, gaskets & hardware) for COFI transformer	384-000-306
	Kit-Service Electronic Ignition SVF 2500/3000 (Igniter, gaskets & hardware) for COFI transformer	384-000-307
140	Kit-Service Switch-Air Pressure SVF 1500-3000 (hardware)	384-000-201
150	Kit-Service Switch-Gas (High) Pressure Gauge Reset-M GMHA244	384-000-202
160	Kit-Service Switch-Gas (Low) Pressure Gauge Reset-M GMLA444	384-000-203
170	Kit-Service Control transformer, 50VA 120-Volt/24-Volt	383-500-628
180	Blower relay switch 15 Amp 120VAC (without socket)	384-000-291
190	Contactor 3-Pole 20 Full Load Amps / 120 Volt Coil SVF 2500/3000	384-000-270
200	Kit-Service Ignition Transformer (if replacing a COFI transformer)	384-000-304
	Kit-Service Ignition Transformer (if replacing a Honeywell transformer) SVF 1500/2000. New Transformer will not be a Honeywell and will require a new igniter	384-000-304 & 384-000-306
	Kit-Service Ignition Transformer (if replacing a Honeywell transformer) SVF 2500/3000. New Transformer will not be a Honeywell and will require a new igniter	384-000-304 & 384-000-307
210	Kit-Service Low Water Cut-Off	383-600-511
220	Kit-Service Temperature sensor, flue & water	384-000-100
230	Kit-Service Temperature sensor well	384-000-101
240	System temperature sensor, 1/2" NPT 4" well	384-000-292
250	Temperature sensor, Outdoor	383-500-125
260	Kit-Service Rocker Switch 16 Amp at 125VAC	383-500-205
270	Kit-Service Filter Minder	384-000-269
300	Assembly Igniter/Sensor Cable 435mm Long With Boot SVF 1500-300 (not shown)	384-000-271
310	Harness-Wiring Control-Tray Auxiliary P15, P16 (not shown)	384-000-272
320	Harness-Wiring Control-Tray Low Voltage Sensors (not shown)	384-000-273
330	Harness-Wiring Control-Tray High Voltage SVF 3000 (not shown)	384-000-274
340	Harness-Wiring Control-Tray Blower Control (not shown)	384-000-275
350	Harness-Wiring High Voltage Field Terminals (not shown)	384-000-276
360	Harness-Wiring Auxiliary Field Terminals (not shown)	384-000-277
370	Harness-Wiring Blower Control (not shown)	384-000-278
380	Harness-Wiring High Voltage SVF 3000 (not shown)	384-000-279
390	Harness-Wiring Low Voltage Sensors (not shown)	384-000-280
400	Harness-Wiring Control-Tray Auxiliary P10, P11, P13, P14 (not shown)	384-000-281
410	Harness-Wiring Blower Control SVF 3000 (not shown)	384-000-282
420	Harness-Wiring High Voltage Lower SVF 2000 (not shown)	384-000-283
430	Harness-Wiring BMS/Multiple Boiler Field Terminals (not shown)	384-000-284
440	Harness-Wiring BMS/Multiple Boiler Control-Tray (not shown)	384-000-285
450	Harness-Wiring Control-Tray High Voltage SVF 2000 (not shown)	384-000-286
460	Harness-Wiring Blower High Voltage SVF 3000 (not shown)	384-000-287
470	Harness-Wiring Gas Pressure Switch Valve Mount (not shown)	384-000-288
480	Harness-Wiring - 84 Inch Control/Display Communication (not shown)	384-000-289
490	Kit-Service Harness-Wiring Control/Display Communication (not shown)	383-500-633
500	Kit-Service Fuse 3-amp, 32-volt fast-blow ATO (5 fuses) (not shown)	383-500-603
510	Kit-Service Fuse 12-amp 250-Volt fast-blow AG (5 fuses) (not shown)	383-500-604
520	Kit-Service Fuse 12.5-amp, 250-Volt slow-blow (1 fuses) (not shown)	384-000-295
530	Kit-Service Fuse 16-amp, 250-Volt slow-blow (1 fuses) (not shown)	384-000-293
540	Kit-Service Fuse 20-amp, 250-Volt slow-blow (1 fuses) (not shown)	384-000- 294

Replacement parts *(continued)*

Figure 111 Controls

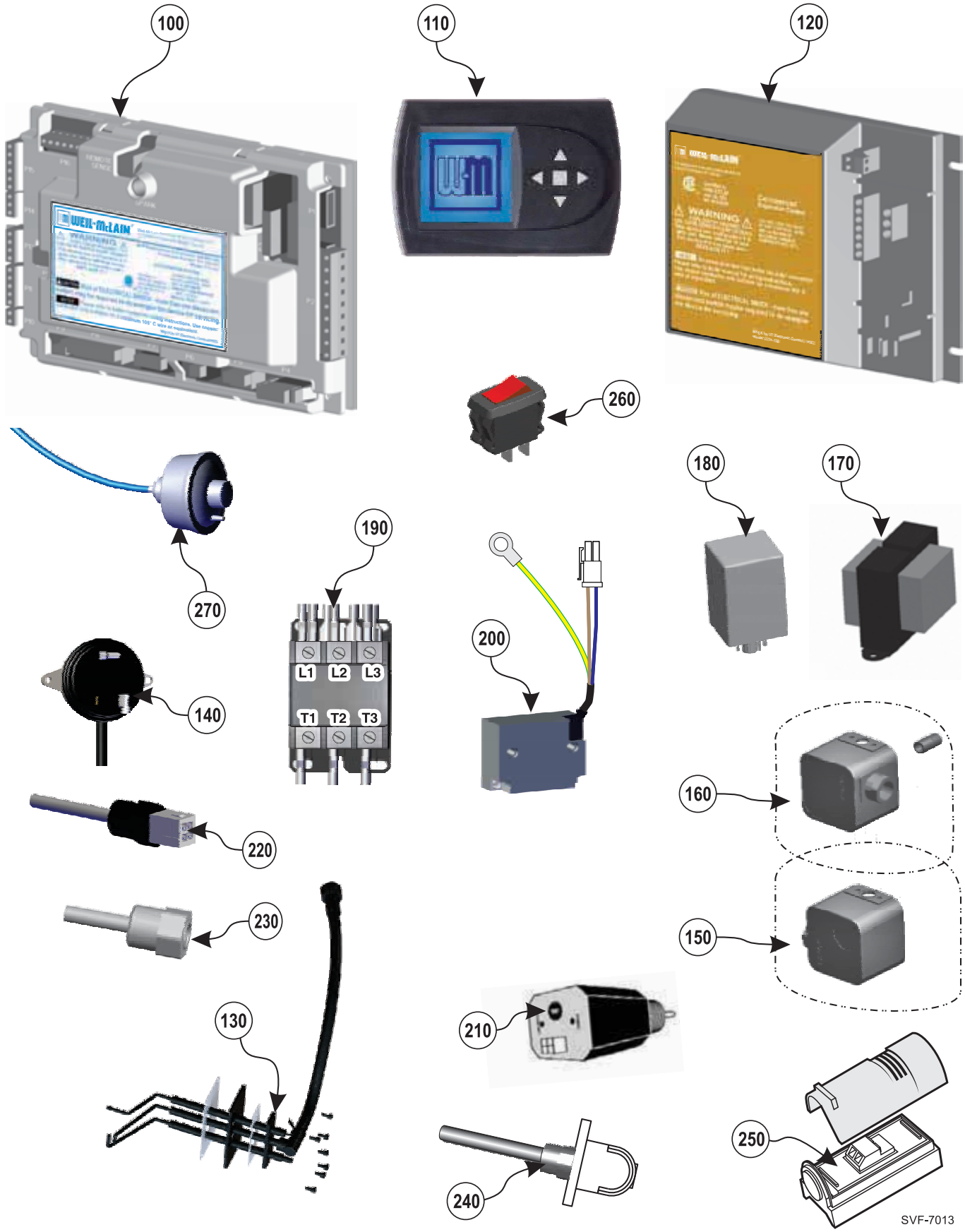

Dimensions

Figure 112 Dimensional data — ***SVF*** 1500/2000

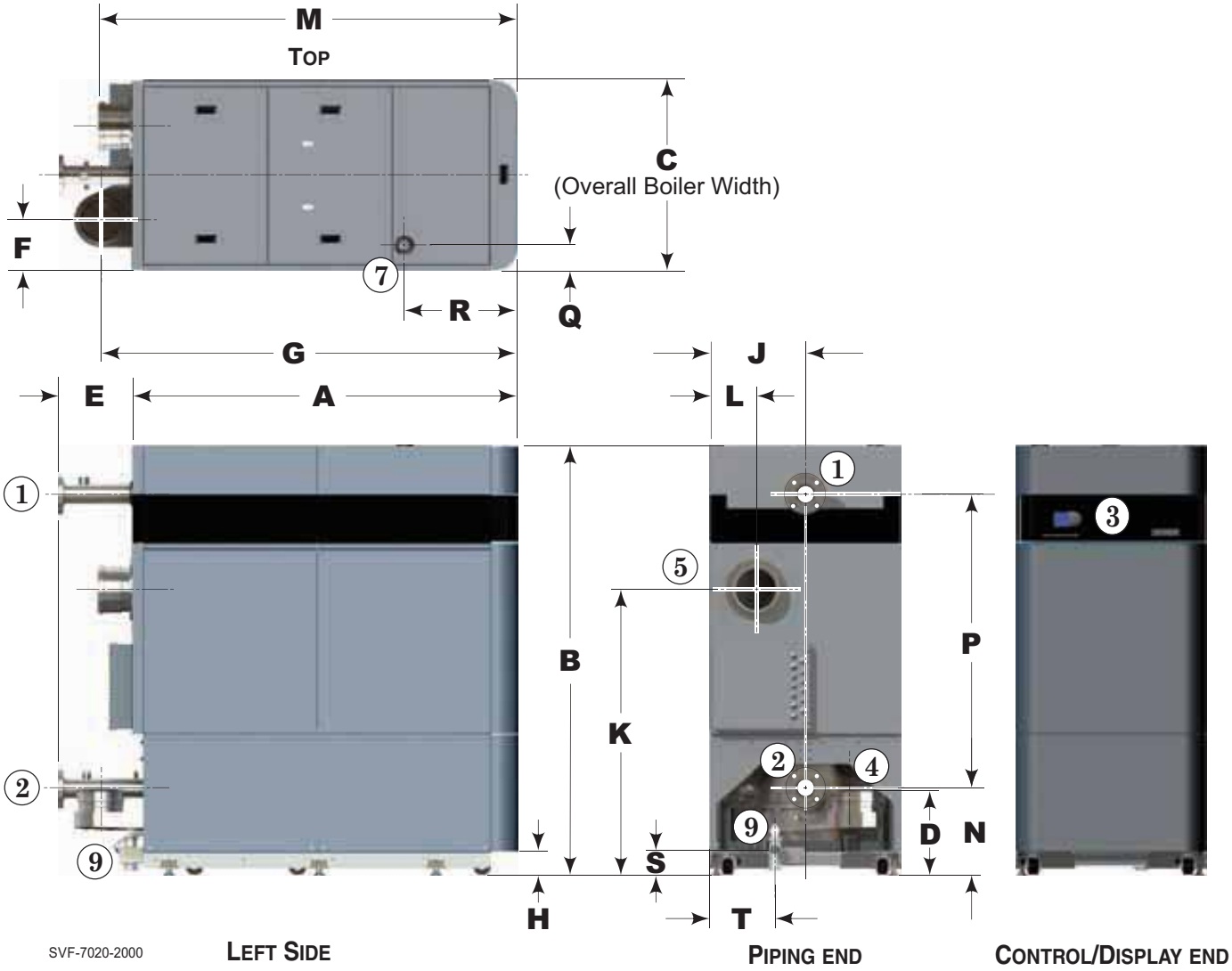

LEGEND					
1	Supply connection, 3” Class 150 flanged	**5**	Air connection, 8” nominal	**9**	Condensate drain connection, 1" O.D.
2	Return connection, 3” Class 150 flanged	**6**	Relief valve connection, 1 ¼" NPT (not shown)		
3	Control panel	**7**	Gas connection, 2” FNPT		
4	Flue connection, 8” nominal	**8**	P/T gauge connection, ¼” NPT (not shown)		

DIMENSIONS (inches) (height dimensions based on 4½ -inch spacing from floor to bottom with leveling legs down)

SVF Boiler	A	B	C	D	E	F	G	H	J	K	L	M	N	P	Q	R	S	T
1500/2000	70 11/16	79 1/16	35 1/8	15 1/2	13 5/8	9 3/16	76 7/16	4 3/16	17 3/8	52 7/16	8 3/8	74 7/8	15 15/16	53 15/16	4 7/16	20 3/4	4 15/16	11 15/16

Dimensions *(continued)*

Figure 113 Dimensional data — ***SVF*** 2500/3000

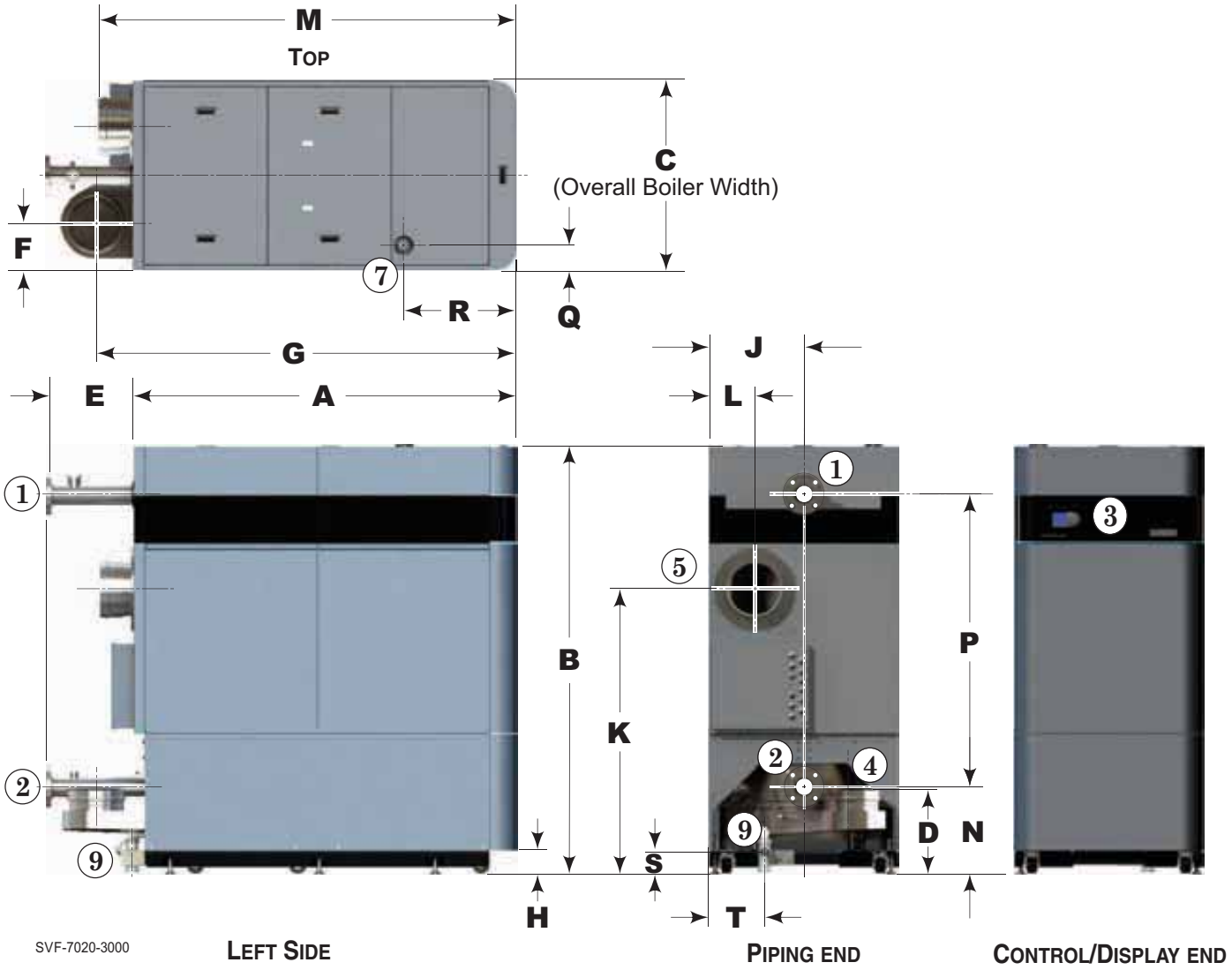

LEGEND					
1	Supply connection, 3” Class 150 flanged	**5**	Air connection, 10” nominal	**9**	Condensate drain connection, 1" O.D.
2	Return connection, 3” Class 150 flanged	**6**	Relief valve connection, 2” NPT (not shown)		
3	Control panel	**7**	Gas connection, 2” FNPT		
4	Flue connection, 10” nominal	**8**	P/T gauge connection, ¼” NPT (not shown)		

DIMENSIONS (inches) (height dimensions based on 4½ -inch spacing from floor to bottom with leveling legs down)

SVF Boiler	A	B	C	D	E	F	G	H	J	K	L	M	N	P	Q	R	S	T
2500/3000	70 11/16	79 1/16	35 1/8	15 1/4	16 1/4	8 9/16	77 9/16	4 3/16	17 3/8	52 7/16	8 3/8	74 7/8	15 15/16	53 15/16	4 7/16	20 3/4	4	10 1/4

Ratings — *SVF* Series 1 boilers

Figure 114 Ratings and engineering data

DOE

Boiler Model Number	Maximum Input	Minimum Input – Natural Gas	Minimum Input – Propane Gas	Gross Output	Net Rating	Thermal Efficiency	Combustion Efficiency	Boiler Water Content	Vent/ Air Pipe Size	Stack/ vent flow rate	Boiler weight (pounds)		
				AHRI Certified Ratings									
	Btuh (Note 1)	Btuh (Note 1)	Btuh (Note 1)	Btuh (Note 1)	Btuh (Note 2)	% (Note 3)	% (Note 4)	Gallons	Inches (Note 5)	scfm (Note 6)	Dry weight (no water)	Operating weight (filled)	Shipping weight
SVF 1500	1,500,000	199,000	300,000	1,448,000	1,259,000	96.5	—	118	8	415	2020	3000	2445
SVF 2000	1,999,000	199,000	300,000	1,923,000	1,672,000	96.2	—	118	8	553	2020	3000	2445
SVF 2500	2,499,000	300,000	300,000	2,419,000	2,104,000	96.8	—	149	10	692	2225	3470	2650
SVF 3000	3,000,000	300,000	300,000	2,874,000	2,499,000	—	95.8	149	10	830	2225	3470	2650

Notes

1	Ratings shown are for sea level applications only. For altitudes above sea level, the ***SVF***™ boiler requires no modifications and automatically de-rates itself by approximately 4% per 1,000 feet above sea level. For elevations over 5,500 feet, see the high altitude section in this manual for required control parameter changes. The length of the vent and air piping will affect the maximum input. See Figure 115, below for derate % vs vent/air piping length.
2	Net AHRI ratings are based on net installed radiation of sufficient quantity for the requirements of the building and nothing need be added for normal piping and pickup. Ratings are based on a piping and pickup allowance of 1.15. An additional allowance should be made for unusual piping and pickup loads.
3	Thermal efficiency is based on AHRI testing procedures AHRI 1500.

Notes

4	Combustion efficiency is based on AHRI testing procedure AHRI 1500, and equal to 100% minus flue loss.
5	***SVF***™ boilers can be direct vent or direct exhaust vented, either through a side wall or through roof, as instructed in this manual and compliant with all local codes. ***SVF***™ Boilers require special venting, consistent with Category IV boiler. Category II, see pages 27-28. Use only the vent materials and methods identified in this manual.
6	The values are for the stack flow rate at the maximum firing rate for the given boiler. The values can vary depending on the location of the installation and operating conditions.

Figure 115 Derate due to vent/air piping length

Boiler Model	Determine vent/air piping equivalent length (feet) — Use the length for L in the equations.	
	Derate % for Direct Exhaust	Derate % for Direct Vent
***SVF* 1500/2000**	**8" vent piping**	**8" vent/air piping**
	Derate % = 0.024 x L	Derate % = 0.039 x L
	Example: If L=75 feet, Derate % = .024 x 75 = 1.8%	Example: If L=75 feet, Derate % = .039 x 75 = 2.93%
SVF 2500/3000	**10" vent piping**	**10" vent/air piping**
	Derate % = 0.005 x L	Derate % = 0.013 x L
	Example: If L=75 feet, Derate % = .005 x 75 = 0.38%	Example: If L=75 feet, Derate % = .013 x 75 = 0.98%

WARNING Failure to follow all instructions can result in flue gas spillage and carbon monoxide emissions, causing severe personal injury or death.

WARNING This document must only be used by a qualified heating installer/service technician. Read all instructions and perform steps in the order given. Failure to comply could result in severe personal injury, death or substantial property damage.

NOTICE Installation must comply with local requirements and with the National Fuel Gas Code - ANSI Z223.1/NFPA 54 – latest edition for U.S. installations or Natural Gas and Propane Installation Code - CAN/CSA B149.1 for Canadian installations.

Installation and Service Certificate

Boiler Model _____ Series _____ Consumer Protection (CP)Number _____ Date Installed _____

BTU Input _____

- ❑ Installation instructions have been followed.
- ❑ Check-out sequence has been performed.
- ❑ Above information is certified to be correct.
- ❑ Information received and left with owner/maintenance person.

Installer _____ _____

_____ _____

(Company) (Address) (Phone) (Installer's Signature)

Installation and Gas Boiler Data Collection Sheet

Boiler Model / Series *SVF* _____ / **Series** _____		**Date Installed**: _____	
CP Number: _____	Fuel Type: _____	BTUH Input: _____	
Flame signal on control display at HIGH fire: _____		Flame signal on control display at LOW fire: _____	
Was venturi changed? YES___ NO___	Was gas valve throttle adjusted? YES___ NO___	Was gas valve offset adjusted? YES___ NO___	
Boiler Settings	**Network Settings**	**Priority 1 Settings**	
Boiler Model: ***SVF*** _____	Boiler Address: ____	System Type:	_____
Control Type: _____	Net Max On Time: _____Min	Target Mod Sensor:	_____
High Altitude: YES___ NO___	Net Min On Time: _____Min	Target Adjust:	_____
	Max Rate On Net: _____%	Supply Max:	_____˚F
	Min Rate On Net: _____%	Supply Min:	_____˚F
Manual Reset High Limit Temp: ____˚F	Rotation & Sequence	OD Reset Max:	_____˚F
WWSD Temp: ____˚F	Sequence Type: _____	OD Reset Min:	_____˚F
Adjust Outdoor: ____˚F	Base Rate High: _____%	Volts For Max:	_____ V
Circulator Exercising	Base Rate Low: _____%	Volts For Min:	_____ V
Circulator 1: ON___ OFF___	Boiler Rotation Type: _____	Boost Time:	_____ Mins
Circulator 2: ON___ OFF___	Rotate Frequency: ____Days	System Off Diff:	_____˚F
Circulator 3: ON___ OFF___	Force Lead Rotation: YES or NO	System On Diff:	_____˚F
Boiler Circ: ON___ OFF___	Modbus Settings	Add BLR Diff:	_____˚F
Freeze Protection	Enable: YES___ NO___	Drop BLR Diff:	_____˚F
Circulator 1: ON___ OFF___	Address: _____	Mod Delay Time:	_____ Mins
Circulator 2: ON___ OFF___	Parity Bit: _____	Stabilization Time:	_____ Mins
Circulator 3: ON___ OFF___	Baud Rate: _____bps	Add Delay Time:	_____Sec
Boiler Circ: ON___ OFF___	Stop Bit: YES___ NO___	Drop Delay Time:	_____Sec
Assign Inputs		Max BLR Temp:	_____˚F
Input 1: Priority___ Aux___ OFF___		Boiler On Diff:	_____˚F
Source: TT1 ___ OR 0-10V ___		Boiler Off Diff:	_____˚F
Input 2: Priority___ Aux___ OFF___		Max On Time:	_____ Mins
Input 3: Priority___ Aux___ OFF___			
		Run Boiler Pump:	YES___ NO___
Max Rate Volts: _____V		Run Aux Pump/Output:	YES___ NO___
Min Rate Volts: _____V		Pre Pump:	_____Sec
Temp Dependent: YES___ NO___		Post Pump:	_____Sec
ODT Setpoint: ____˚F		Max Rate:	_____%
Activate Contact		Min Rate:	_____%
below setpoint: 1st____ 2nd____		Max System BTUs:	_____ MBUTs
		Min Boilers On:	_____
		Additional Heat Demand:	1st___ 2nd___ OFF__
		Response Time:	_____ Mins
		ODT	YES___ NO___

Installation and Gas Boiler Data Collection Sheet

CO2 @: High Fire_____% Low Fire_____%

CO@: High Fire _____ ppm Low Fire _____ ppm

Input rate measured: HIGH _____ CFH / LOW_____ CFH

Priority 2 Settings		Priority 3 Settings		Priority 4 Settings (Multi BLR Sys Only)	
System Type:	_____	System Type:	_____	System Type:	_____
Target Mod Sensor:	_____	Target Mod Sensor:	_____	Target Mod Sensor:	_____
Target Adjust:	_____	Target Adjust:	_____	Target Adjust:	_____
Supply Max:	_____˚F	Supply Max:	_____˚F	Supply Max:	_____˚F
Supply Min:	_____˚F	Supply Min:	_____˚F	Supply Min:	_____˚F
OD Reset Max:	_____˚F	OD Reset Max:	_____˚F	OD Reset Max:	_____˚F
OD Reset Min:	_____˚F	OD Reset Min:	_____˚F	OD Reset Min:	_____˚F
Volts For Max:	_____ V	Volts For Max:	_____ V	Volts For Max:	_____ V
Volts For Min:	_____ V	Volts For Min:	_____ V	Volts For Min:	_____ V
Boost Time:	_____ Mins	Boost Time:	_____ Mins	Boost Time:	_____Mins
System Off Diff:	_____˚F	System Off Diff:	_____˚F	System Off Diff:	_____˚F
System On Diff:	_____˚F	System On Diff:	_____˚F	System On Diff:	_____˚F
Add BLR Diff:	_____˚F	Add BLR Diff:	_____˚F	Add BLR Diff:	_____˚F
Drop BLR Diff:	_____˚F	Drop BLR Diff:	_____˚F	Drop BLR Diff:	_____˚F
Mod Delay Time:	_____ Mins	Mod Delay Time:	_____ Mins	Mod Delay Time:	_____Mins
Stabilization Time:	_____ Mins	Stabilization Time:	_____ Mins	Stabilization Time:	_____Mins
Add Delay Time:	_____Sec	Add Delay Time:	_____Sec	Add Delay Time:	_____Sec
Drop Delay Time:	_____Sec	Drop Delay Time:	_____Sec	Drop Delay Time:	_____Sec
Max BLR Temp:	_____˚F	Max BLR Temp:	_____˚F	Max BLR Temp:	_____˚F
Boiler On Diff:	_____˚F	Boiler On Diff:	_____˚F	Boiler On Diff:	_____˚F
Boiler Off Diff:	_____˚F	Boiler Off Diff:	_____˚F	Boiler Off Diff:	_____˚F
Max On Time:	_____ Mins				
Min On Time:	_____ Mins	Min On Time:	_____ Mins	Min On Time:	_____ Mins
Run Boiler Pump:	YES___ NO___	Run Boiler Pump:	YES___ NO___	Run Boiler Pump:	YES___ NO___
Run Aux Pump/Output:	YES___ NO___	Run Aux Pump/Output:	YES___ NO___	Run Aux Pump/Output:	YES___ NO___
Pre Pump:	_____Sec	Pre Pump:	_____Sec	Pre Pump:	_____Sec
Post Pump:		Post Pump:	_____Sec	Post Pump:	_____ Sec
Max Rate:	_____%	Max Rate:	_____%	Max Rate:	_____%
Min Rate:	_____%	Min Rate:	_____%	Min Rate:	_____%
Max System BTUs:	_____MBUTs	Max System BTUs:	_____ MBUTs	Max System BTUs:	_____ MBUTs
Min Boilers On:	_____	Min Boilers On:	_____	Min Boilers On:	_____
Additional Heat Demand:	1st___ 2nd__ OFF__	Additional Heat Demand:	1st___ 2nd__ OFF__	Additional Heat Demand:	1st___ 2nd__ OFF__
Response Time:	_____Mins	Response Time:	_____ Mins	Response Time:	_____ Mins
ODT	YES___ NO___	ODT	YES___ NO___	ODT	YES___ NO___

SVF™ Series 1 Commercial Condensing Gas-Fired Water Boiler — Boiler Manual

Weil-McLain
500 Blaine Street
Michigan City, IN 46360-2388
http://www.weil-mclain.com